SJRA

SAN JACINTO RIVER AUTHORITY

Board of Directors Meeting
October 22, 2026

Agenda
Regular Meeting
San Jacinto River Authority Board of Directors
Thursday, October 22, 2026 - 9:00 A.M.
General and Administration Building - Boardroom
1577 Dam Site Road, Conroe, Texas 77304

A quorum of the San Jacinto River Authority Board of Directors will be physically present in the Boardroom of the General and Administration Building located at 1577 Dam Site Road, Conroe, Texas, as it is the intent of the Board of Directors to have a quorum physically present at this location. One or more members of the Board of Directors, however, may participate in the meeting by video-conference call as permitted under Section 551.127 of the Texas Government Code.

1. Invocation and Pledges of Allegiance to the U.S. and Texas Flags

1.1 Invocation led by Director Mark Micheletti
1.2 Pledges of Allegiance led by Director Ronnie Anderson

2. Ceremonial Items

2.1 Receipt of Commendations, Awards, and Honoraria
2.1.1 Cybersecurity Awareness Month

3. Call to Order

4. Public Comments (3 minutes per speaker)

5. Work Session
This item consists of updates, briefings, presentations, and discussion items that may require in-depth consideration and discussion by the Board.

5.1 Update by the General Manager regarding meetings, projects, events, issues, and activities pertinent to the Authority.

5.2 Update by the Director of Communications and Public Affairs regarding various division and department projects, initiatives, tours, meetings, and social media platforms.

6. Consent Agenda
This agenda consists of ministerial or "housekeeping" items required by law, such as routine bids, contracts, purchases, resolutions, and orders; items previously approved by Board action, such as adoption of items that are part of an approved budget or capital improvement projects, interlocal agreements, or action which is required by law or delegated to the General Manager; and items of a non-controversial nature. These items will be considered by a single motion unless removed and placed on the Regular Agenda for individual consideration at the request of any Director.

6.1 G&A Division - Minutes

Approval of Minutes - Regular Meeting of September 24, 2026.

6.2 G&A Division - General Services Agreement for On-Call Water Conveyance, Embankments, and Dirt Work Services (Mallard)

Consider authorizing the General Manager to execute the initial term of a General Services Agreement with Mallard Underground Utilities, LLC, to provide water conveyance, embankments, and dirt work services for all SJRA Divisions.

6.3 G&A Division - General Services Agreement for On-Call Water Conveyance, Embankments, and Dirt Work Services (LASS)

Consider authorizing the General Manager to execute the initial term of a General Services Agreement with LASS Engineering and Construction, Inc., to provide water conveyance, embankments, and dirt work services for all SJRA Divisions.

6.4 G&A Division - General Services Agreement for Fuels, Oils, and Lubricants

Consider authorizing the General Manager to execute the second renewal term of a General Services Agreement with Whitener Enterprises to continue providing fuels, oils, and lubricants for all SJRA Divisions.

6.5 GRP Division - Purchase of Coagulants for GRP

Consider authorizing the General Manager to approve purchases with CedarChem, LLC, for coagulants for the GRP Division.

6.6 GRP Division - Granulated Activated Carbon Exchange Services

Consider authorizing the General Manager to execute a General Services Agreement with Carbon Activated Corporation for granulated activated carbon exchange services for the GRP Division.

6.7 GRP Division - Connection and Reimbursement Agreement

Consider approval of a Connection and Reimbursement Agreement with the City of Conroe for surface water delivery to the city's McCaleb Road Water Plant No. 26.

6.8 Highlands Division - Service Agreement and Service Order for Dark Fiber Services

Consider authorizing the General Manager to execute a Service Agreement and Service Order with PS Lightwave, Inc., for dark fiber services for the Highlands Division SCADA system.

6.9 Lake Conroe Division - Lake Conroe Dam Relief Wells Maintenance

Consider authorizing the General Manager to execute the initial term of a General Services Agreement with Integrity Pipeline Services, Inc., to provide Lake Conroe Dam Relief Wells Maintenance Services for the Lake Conroe Division.

6.10 Woodlands Division - Automated Rake Screen at Wastewater Treatment Facility No. 3

Consider authorizing the General Manager to approve purchases with Headworks International for an automated rake screen at Wastewater Treatment Facility No. 3 for the Woodlands Division.

7. Regular Agenda

This agenda consists of items requiring individual consideration by the Board of Directors.

7.1 GRP Division - Membrane Replacement and Optimization Phase 2 Services

Consider authorizing the General Manager to execute a Professional Services Agreement with Plummer Associates, Inc., for GRP Membrane Replacement and Optimization Phase 2 services for the GRP Division.

7.2 Woodlands Division - Lift Station No. 24 Improvements

Consider authorizing the General Manager to execute a Professional Services Agreement with Weston Solutions, Inc., for final design for the Lift Station No. 24 Improvements Project for the Woodlands Division.

8. Executive Session

If necessary, the Board of Directors will adjourn to Closed Session at this point in the meeting to consider the following items; however, the Board of Directors reserves the right to adjourn to Closed Session at any time during the course of this meeting as allowed by law.

8.1 Discussion regarding items identified elsewhere on the agenda pursuant to Texas Government Code Sections 551.071, Consultation with Attorney; 551.072, Real Property; 551.073, Prospective Gifts; 551.074, Personnel Matters; 551.076, Security Devices, or 551.0761, Critical Infrastructure, as applicable.

8.2 Pursuant to Texas Government Code, Section 551.071, Consultation with Attorney:

8.2.1 Litigation related to Hurricane Harvey, including additional legal services to be provided by Hunton Andrews Kurth, LLP; and

8.2.2 Litigation involving City of Magnolia, Quadvest, L.P., Woodland Oaks Utility, L.P., related to GRP, and other potential litigation related to GRP.

9. Reconvene In Open Session

The Board of Directors will reconvene in Open Session at this point in the meeting and, if necessary, take action on any agenda item discussed in Closed Session and/or identified below.

10. Announcements / Future Agenda

Next San Jacinto River Authority Regular Board Meeting - December 10, 2026.

11. Adjourn

Persons with disabilities who plan to participate in the meeting and would like to request auxiliary aids or services are requested to contact Cynthia Bowman at (936) 588-3111 at least three business days prior to the meeting so that appropriate arrangements can be made.

SJRA
SAN JACINTO RIVER AUTHORITY

Board Communication

Item No.	Agenda Item	Date
6.1	Consider approval of minutes from the Board of Directors meeting of September 24, 2026.	**10/22/2026**

BACKGROUND INFORMATION

FUNDING SOURCE: N/A

ATTACHMENTS: Minutes

RECOMMENDED ACTION

Approve the minutes of the September 24, 2026, Board of Directors meeting.

BOARD OF DIRECTORS
SAN JACINTO RIVER AUTHORITY
MINUTES OF REGULAR MEETING
SEPTEMBER 24, 2026

A regular meeting of the Board of Directors of the San Jacinto River Authority was held at 9:00 a.m., September 24, 2026, at the San Jacinto River Authority General and Administration Building. Notice of said meeting was posted as required by law. President Ronnie Anderson, Vice President Ed Boulware, Treasurer Mark Micheletti, Secretary Wil Faubel, Secretary ProTem Ricardo Mora, and Director Stacey Buick were in attendance. Director Stephanie Johnson was absent. Also in attendance were Aubrey A. Spear, General Manager; Heather Ramsey, Director of Communications and Public Affairs; Samir Solanki, Chief Operations Officer; Connie Curtis, Director of Technical and Operational Services; Pam Steiger, Chief Financial Officer; Cynthia Bowman, Chief of Staff; and Amy Sims, General Counsel.

1. Invocation and Pledges of Allegiance to the U.S. and Texas Flags

The invocation was given by Judge Wayne L. Mack, Mims Baptist Church and the Pledges of Allegiance to the U.S. and Texas Flags were led by Director Anderson.

2. Ceremonial Items

2.1 Receipt of Commendations, Awards, and Honoraria

Ms. Pam Steiger, Chief Financial Officer, introduced and recognized members of the Human Resources Department in observance of Human Resource Professionals Month.

3. Call to Order

The meeting was called to order at 9:05 a.m.

4. Public Comments

Mr. Bill Beran spoke about drought preparedness, and Mr. Dan Krueger spoke about the Texas Water Development Board's regional water planning grant.

5. Work Session

5.1 Update by the General Manager regarding meetings, projects, events, issues, and activities pertinent to the Authority

Mr. Spear provided comments related to the various meetings, projects, events, issues, and activities pertinent to SJRA.

5.2 Update by the Director of Communications and Public Affairs regarding updates related to various division and departmental projects, initiatives, tours, meetings, and social media platforms

Ms. Ramsey provided information related to various community engagement events, social media activities, and employee highlights.

DRAFT

6. Consent Agenda

Director Buick made a motion to approve the Consent Agenda as presented. The motion was seconded by Director Boulware and carried unanimously.

6.1 G&A Division - Minutes

Approve Minutes - Regular Meeting of August 27, 2026.

6.2 G&A Division - Unaudited Financials

Approve the unaudited financials for the month of July, 2026.

6.3 G&A Division - Quarterly Investment Report

Approve the Quarterly Investment Report for the Quarter Ended August 31, 2026.

6.4 G&A Division - Resolution - Authorized Signatories

Adopt Resolution No. 2026-R-16, of the San Jacinto River Authority Board of Directors designating authorized signatories for all Authority financial transactions with the authorized depository banks and any other financial institutions in order to execute necessary financial transactions to conduct the Authority's financial business.

6.5 G&A Division - Land Acquisition Support Services

Authorize the General Manager to execute Amendment No. 1 to the Master Professional Services Agreement with PAS Property Acquisition Services, LLC, for land acquisition support services for all SJRA Divisions.

6.6 GRP Division - Land Acquisition Legal Services

Authorize the General Manager to execute an Engagement Agreement with David & Stephens, LLP, for land acquisition legal services for the GRP Division.

6.7 Woodlands and GRP Divisions - On-Call Painting and Coatings

Authorize the General Manager to execute the second (final) renewal term of the General Services Agreement with Integrity Pipeline Services, Inc., in the amounts of $90,000 for the Woodlands Division and $30,000 for the GRP Division, for on-call painting and coatings for the Woodlands and GRP Divisions.

6.8 Woodlands Division - Lift Station No. 1 Gravity Main Bypass and Decommissioning Project Easement Acquisition

Authorize the General Manager to execute easement acquisition for the permanent and temporary construction easements needed for the Lift Station No. 1 Gravity Main Bypass and Decommissioning Project.

DRAFT

6.9 Highlands Division - Amendment No. 1 to Work Order No. 4 for Siphon 39 and Levee Improvements

Authorize the General Manager to execute Amendment No. 1 to Work Order No. 4 with Aviles Engineering Corporation in an amount not to exceed $65,515, to provide construction materials testing services for the Siphon 39 and Levee Improvements Project for the Highlands Division.

7. Regular Agenda

7.1 G&A Division - Texas Water Development Board Grant Funding for Region H Water Planning Group

Mr. Jared Marek, Graduate Engineer, provided an overview of the Texas Water Development Board (TWDB) grant funding process for the Region H Water Planning Group (RHWPG) and the associated Professional Services Agreement for development of the 2031 Region H Regional Water Plan. He explained that the sixteen regional water planning groups prepare 50-year regional water plans that serve as the foundation for the State Water Plan and are updated every five years. He stated that each regional water planning group designates a governmental entity to serve as its administrative agency to receive TWDB planning grant funds and distribute the funds to the consultant selected to prepare the regional water plan. Mr. Marek noted that the San Jacinto River Authority (SJRA) serves as the administrative agency for the RHWPG and on October 1, 2025, the RHWPG authorized SJRA to submit a grant application to TWDB and, upon approval, execute a contract with TWDB on behalf of the RHWPG to receive initial funding for the seventh planning cycle. He provided an overview of the consultant selection process, noting that the contract includes the current scope of work for the regional water plan development tasks approved by TWDB. Mr. Marek explained that on July 1, 2026, the RHWPG selected Freese and Nichols, Inc. (FNI), to prepare the 2031 Region H Regional Water Plan and authorized SJRA to execute a contract with FNI on behalf of the RHWPG. Director Faubel made a motion to authorize the General Manager to negotiate and execute a contract with the Texas Water Development Board for grant funding from the Regional Water Planning Grant on behalf of the Region H Water Planning Group. The motion was seconded by Director Mora and carried unanimously.

7.2 G&A Division - Professional Services Agreement - 2031 Region H Regional Water Plan

Director Faubel made a motion to authorize the General Manager to negotiate and execute a Professional Services Agreement with Freese and Nichols, Inc., on behalf of the Region H Water Planning Group for the development of the 2031 Region H Regional Water Plan. The motion was seconded by Director Micheletti and carried unanimously.

7.3 Woodlands Division - Interlocal Agreement for Landscape and Signage Replacement

Mr. Dan Hilderbrandt, Technical Services Manager, explained that the Woodlands Division identified a number of capital improvements that will take place in the future that may impact existing trees, bushes, shrubs, and signage that are owned and maintained by The Woodlands Township. He stated that the proposed interlocal agreement is the best mechanism to address agency and financial responsibility for which the San Jacinto River Authority (SJRA) will be responsible for the trees, bushes, shrubs, and signage that will need to be removed and replaced. Director Boulware made a motion to authorize the General Manager to execute an Interlocal Agreement between SJRA and The Woodlands Township for landscape and signage replacement related to the Woodlands Division's major repair and rehabilitation projects. The motion was seconded by Director Buick and carried unanimously.

DRAFT

8. Executive Session

The meeting was convened into executive session at 9:37 a.m., under the following provisions:

8.1 Discussion regarding items identified elsewhere on the agenda pursuant to Texas Government Code Sections 551.071, Consultation with Attorney; 551.072, Real Property; 551.073, Prospective Gifts; 551.074, Personnel Matters; 551.076, Security Devices, or 551.0761, Critical Infrastructure, as applicable.

8.2 Pursuant to Texas Government Code, Section 551.071, Consultation with Attorney:

8.2.1 Litigation related to Hurricane Harvey, including additional legal services to be provided by Hunton Andrews Kurth, LLP;

8.2.2 Litigation involving City of Magnolia, Quadvest, L.P., Woodland Oaks Utility, L.P., related to GRP, and other potential litigation related to GRP;

8.2.3 Discussion regarding the Lake Conroe Maintenance Building Project; and

8.2.4 Discussion regarding a Water Rights Permit Application seeking authorization for reuse of regional return flows, and related contractual rights and obligations; and

8.2.5 Discussion regarding regulation of water quality and inflows into Lake Conroe.

9. Reconvene in Open Session

With a quorum of the Board present, the meeting was called into open session at 11:28 a.m.

10. Announcements

It was announced that the next San Jacinto River Authority Regular Board meeting will take place on October 22, 2026.

11. Adjourn

Without objection, the meeting was adjourned at 11:29 a.m.

_____

Wil Faubel
Secretary
Board of Directors

DRAFT

SJRA
SAN JACINTO RIVER AUTHORITY

Board Communication

Item No.	Agenda Item	Date
6.2	Consider authorizing the General Manager to execute the initial term of a General Services Agreement with Mallard Underground Utilities, LLC, to provide on-call water conveyance, embankments, and dirt work services for all SJRA Divisions.	**10/22/2026**

BACKGROUND INFORMATION

Firm Name:	Mallard Underground Utilities, LLC
Type of Agreement:	Initial Term - General Services Agreement
Service:	Water Conveyance, Embankments, and Dirt Work
Contract Number:	26-0030-B
Initial Contract Term Amount:	$275,000.00

The San Jacinto River Authority seeks to enter into an agreement with Mallard Underground Utilities, LLC, a qualified firm possessing substantial experience and expertise in providing on-call services for water conveyance systems, embankments, levees, and related earthwork. Services may include excavation and material handling; repair of berms, levees, canals, embankments, and dams resulting from burrowing animal activity, storm damage, or erosion; repair or replacement of riprap; and other dirt work and maintenance activities throughout any SJRA Division as needed. This agreement will provide a responsive resource to address both routine and emergency infrastructure maintenance and repair requirements. The contract with Mallard Underground Utilities, LLC, is for a not-to-exceed amount of $275,000 for all SJRA Divisions, and will be due for renewal on October 22, 2027, which is the first year of an up to 3-year contract.

FUNDING SOURCE: O&M

ATTACHMENTS: General Services Agreement

RECOMMENDED ACTION

Authorize the General Manager to execute the initial term of a General Services Agreement with Mallard Underground Utilities, LLC, in an amount not to exceed $275,000, to provide on-call water conveyance, embankments, and dirt work services for all SJRA Divisions. Sufficient funds were budgeted and are available in Fiscal Year 2027 for this purpose.

SAN JACINTO RIVER AUTHORITY

STANDARD FORM OF AGREEMENT

GENERAL SERVICES

CONTRACT # 26-0030-B

ON-CALL SERVICES FOR WATER CONVEYANCE SYSTEMS, EMBANKMENTS AND DIRT WORK

Procurement Department
1577 Dam Site Road
Conroe, Texas 77304

GENERAL SERVICES AGREEMENT
Contract #26-0030

Project: *On-Call Services for Water Conveyance Systems, Embankments and Dirt Work*

Project Location: All San Jacinto River Authority Locations

THE PARTIES

The SJRA: The SAN JACINTO RIVER AUTHORITY

- *General and Administration Division - PO Box 329, Conroe, TX 77305 936-588-3111*
- *Flood Management Division – PO Box 329, Conroe, TX 77305 936.588.3111*
- *GRP Division - PO Box 329, Conroe, TX 77305 936-588-1111*
- *Lake Conroe Division - PO Box 329, Conroe, TX 77305 936-588-1111*
- *Highlands Division – PO Box 861, Highlands, TX 77562 281-843-3300*
- *Woodlands Division – PO Box 7537, The Woodlands, TX 77387 281-362-4385*

(Contact Person / Phone / e-mail) Grady Garrow/936 588 7181/ggarrow@sjra.net

and

Contractor: Mallard Underground Utilities, LLC

(Address for Written Notice) 48 Tall Oaks Dr, Huffman, TX 77336

(Contact Person / Phone / email) John Berryman/281 840 2614/johnb@mallardundergroundutilities.com

The SJRA and the Contractor may be referred to herein individually as a "Party" and together as the "Parties".

FOR THE MUTUAL PROMISES SET OUT HEREIN THE PARTIES AGREE AS FOLLOWS:

ARTICLE 1
WORK OF THE CONTRACT

1.1 Contractor shall perform the Work and provide the Goods in accordance with the terms of this Agreement and any and all Exhibits attached hereto and the documents enumerated in Paragraph 7.1 below, all of which documents are incorporated herein (collectively the "Contract Documents"). Contractor shall provide all labor, materials, equipment, services, supervision, tools, facilities, utilities, and other items necessary for the proper and timely performance and completion of the following generally described work (herein the "Work") and supply of the following generally described goods (herein the "Goods"), in strict accordance with the terms of the Contract Documents and as reasonably inferable from the Contract Documents as necessary for such Work to be complete and serviceable and such Goods to be fully and finally supplied:

Contractor to provide on-call services for water conveyance systems, embankments, and dirt work repairs.

1.2 Changes in the Work and changes with respect to the supply of the Goods may be accomplished after execution of this Agreement, and without invalidating this Agreement, by Amendment. A "Amendment" is a

written instrument prepared by SJRA and signed by SJRA and Contractor, stating their agreement upon all of the following: (1) the change in the Work; (2) the amount of the adjustment, if any, in the Contract Price; and (3) the extent of the adjustment, if any, in the Contract Time. All changes in the Work shall be performed under applicable provisions of the Contract Documents, and the Contractor shall proceed promptly, unless otherwise provided in the Amendment. A field directive or field order, or any other order, direction, instruction, clarification, information or request by SJRA or any of its consultants, or any other representative of SJRA, shall not be recognized as having any effect upon the Contract Price or the Contract Time, unless documented as an Amendment, and Contractor shall not have any claim for adjustment of the Contract Price or the Contract Time as a result thereof, unless Contractor shall, prior to complying therewith and in no event later than five (5) days from the date such directive, order, etc. was given, submit a written claim therefor.

1.3 Contractor shall obtain and pay for all construction permits, licenses and fees (as legally required) for prosecution of the Work and supply of the Goods, except as otherwise provided in the Contract Documents.

ARTICLE 2
PERIOD OF SERVICE

2.1 This Agreement shall become effective upon execution of this Agreement by SJRA and the Contractor, and shall remain in effect for an initial term of one (1) year with the option to renew for two (2) additional one (1) year terms for a total of three (3) years unless terminated earlier in writing in accordance herein. Any renewal must be in writing and executed by both the Parties. At the sole option of SJRA, the Agreement may be further extended as an emergency extension, on a month-to-month basis. The Work to be undertaken and/or the supply of Goods pursuant to this Agreement will be required to commence within fourteen (14) days of delivery of a notice to proceed, or issuance of a SJRA Purchase Order. **TIME IS OF THE ESSENCE IN THIS AGREEMENT**. The Contractor shall make all reasonable efforts to complete the Work and the supply of the Goods as expeditiously as possible and to meet the schedule established by the Parties. The Work and the supply of the Goods shall be accomplished per the scope of services as identified in the Contract Documents

ARTICLE 3
CONTRACT PRICE

3.1 The maximum, not-to-exceed compensation payable to Contractor under this Contract within the initial year, is **$275,000.00** SJRA will not pay Contractor any amount in excess of the not-to-exceed compensation of this Contract for completing the Work and will not pay for Work performed before the date this Contract becomes effective or after the termination of this Contract. If the maximum compensation is increased by amendment of this Contract, the amendment must be fully effective before Contractor performs Work subject to the amendment.

The SJRA will pay Contractor in current funds for Contractor's completion of the Work and supply of the Goods, in accordance with the Contract Documents, the Contract Price as follows:

[X] Unit prices for actual quantities of Work performed, based upon the Contractor's Proposal attached hereto as **Exhibit A,** and delivery tickets, field measurements, or other documentation acceptable to SJRA as satisfactory evidence of actual quantities of Work performed. Unit prices include all Contractor costs, overhead and profit for the Work.

The unit prices are based upon the estimated quantities stated in the Contractor's Proposal. If quantities of Work actually performed are less or more than the quantities stated in the Contractor's Proposal by twenty percent (20%) or more, whether as a result of inaccurate estimated quantities or changes in the Work requested by SJRA, and if as a result of any such reduction in quantity Contractor demonstrates to SJRA's satisfaction that Contractor is unable to recover its fixed costs of the Work, or if as a result of any such increase in quantity

Contractor's costs of the Work are reduced by subcontractor or supplier rate or price reductions or discounts, economies of scale, or otherwise, the applicable unit prices shall be equitably adjusted by Amendment.

3.2 Contractor shall pay only, and Contractor warrants and represents that the Contract Price includes only, those sales, consumer, use and other similar taxes required to be paid by Contractor in accordance with the laws and regulations of the State of Texas in the performance of this public works contract. SJRA is a political subdivision of the State of Texas and exempt from the payment of state and local sales, use and excise taxes.

3.3 Non-Appropriation: All funds for payment by SJRA under this Agreement are subject to the availability of an annual appropriation for this purpose by SJRA. In the event of non-appropriation of funds by the Board of Directors of SJRA for the services provided under the Agreement, SJRA will terminate the Agreement, without termination charge or other liability, on the last day of the then-current fiscal year or when the appropriation made for the then-current year for the services covered by this Agreement is spent, whichever event occurs first (the "Non-Appropriation Date"). If at any time funds are not appropriated for the continuance of this Agreement, cancellation shall be accepted by the Contractor on thirty (30) days prior written notice, but failure to give such notice shall be of no effect and SJRA shall not be obligated under this Agreement beyond the Non-Appropriation Date.

ARTICLE 4
PAYMENT PROCEDURES

4.1 Contractor shall submit no more than one (1) invoice per month, in a form acceptable to SJRA and including supporting documentation requested by SJRA, requesting payment for Work performed in accordance with the requirements of the Contract Documents during the prior month. The SJRA will make payments in compliance with the Texas "prompt payment law" which provides that payments owed by SJRA for the Goods and Work are due no later than 45 days after the Goods are received by SJRA, the Work is completed, or an invoice for the Goods or Work is received, whichever is later, unless there is a bona fide dispute between SJRA and Contractor about the Goods delivered or the Work performed that causes the payment to be late, or the terms of a federal contract, grant, regulation, or statute prevent SJRA from making a timely payment with federal funds, or the invoice is not mailed to the person to whom it is addressed in strict accordance with any instruction on the Purchase Order relating to the payment. (Ref Chapter 2251 of Texas Gov. Code). SJRA shall notify Contractor in writing of a disputed amount in an invoice within twenty-one (21) days of receipt. Such notice shall include a detailed statement of the amount of the invoice which is disputed.

Unless otherwise requested by SJRA, invoices shall be (a) delivered electronically to ap@sjra.net with a copy to [Construction Manager via email], and (b) rendered separately for each Purchase Order and not cover more than one Purchase Order. All invoices must be itemized. Invoices must be fully documented as to labor materials, and equipment provided.

Each invoice shall include:

- Contractor's name, address and telephone number
- An invoice date and number
- SJRA Purchase Order number
- Contract number
- Quantity of hours for each type of labor as detailed on the pricing sheet (Exhibit A) multiplied by the contracted labor price.
- Original cost of materials + contract markup (attach a copy of the original materials Invoice to SJRA invoice).
- Line items total
- Total cost of repair or reconditioning at or below the not-to-exceed price on accepted

Proposal.
- Amounts previously paid on such Purchase Order, if any.
- Seller's "remit to" address
- Freight or Additional supporting documentation of third party charges, if applicable

Each invoice line should include:

- A full description of the material/service ordered, and the SJRA part number if provided on the Purchase Order.
- Quantities ordered, quantities delivered, unit prices and extended prices if applicable.
- Date(s) of services/delivery
- If the Purchase Order has multiple lines, the invoice lines should specify the Purchase Order line being charged

A proforma invoice shall be sent to the SJRA Division Manager Representative, as identified in the Notice to Proceed, and include the following:

- Test results verifying correct working conditions for EACH motor repaired or reconditioned must be received by the SJRA Division Manager Representative before payment will be remitted.
- Test results may either accompany the delivery of the motor or be emailed SAME DAY to the SJRA Division Manager Representative.
- Test results shall contain the Purchase Order number, quotation number and invoice number.

Complete and accurate information is required for timely payment. SJRA will, within twenty-one (21) calendar days after receipt of each invoice, accept and process such invoice for payment, or return the invoice to Contractor indicating SJRA's reasons for refusing to issue payment. If an invoice contains errors or fails to include required information, a corrected invoice should be submitted and payment delays will be incurred. The payment terms commence with performance of Work and/or the delivery of conforming Goods and the receipt of a correct invoice.

4.2 SJRA may withhold or nullify the whole or part of any payment to such extent as may be necessary, but in no event greater than 110% of the disputed amount, on account of:

(a) defective Work not remedied;
(b) third party claims filed or reasonable evidence indicating probable filing of such claims;
(c) failure of Contractor to timely or properly make payments to subcontractors or for labor, materials or equipment;
(d) reasonable evidence that the Work cannot be completed for the unpaid balance of the Contract Price;
(e) damage to SJRA or another contractor for which Contractor is responsible;
(f) reasonable evidence that the Work will not be completed within the Contract Time, and that the unpaid balance would not be adequate to cover actual or liquidated damages or economic disincentives for the anticipated delay;
(g) failure of Contractor to submit or update a schedule of values, submittal schedule, or construction project schedule in accordance with the Contract Documents;
(h) failure of Contractor to maintain a record of changes on drawings and documents;
(i) failure of Contractor to maintain weekly payroll reports and, as applicable, provide copies of reports in a timely manner upon request of Owner;
(j) Contractor's neglect or unsatisfactory prosecution of the Work, including failure to clean up;
(k) property damage claims that are the responsibility of the Contractor; or
(l) failure of Contractor to comply with any provision of the Contract Documents.

Any failure by SJRA to exercise its right to withhold all or any part of payment requested in any invoice as provided in this Paragraph 4.2 shall not be and shall not be construed as (i) a waiver of SJRA's right to do so in the future, or (ii) evidence that any of the circumstances identified in Subparagraphs 4.2(a) through (l) above have not occurred. When the above reasons for withholding payment are remedied or no longer exist, Contractor shall resubmit an invoice for the withheld amounts. Payment will be made within forty-five (45) calendar days of receipt by SJRA of an approved invoice, subject to Paragraph 4.3 below.

4.3 For purposes of this Agreement, "Final Completion" shall be the point in time when SJRA determines that all Work has been completed and the Agreement fully performed except for those obligations that survive final payment. Upon written notice from Contractor that the entire Work is complete, SJRA will make a final inspection with Contractor and provide written notice of all particulars in which this inspection reveals that the Work is incomplete or defective. Contractor shall immediately take such measures as are necessary to complete such Work or remedy such deficiencies. SJRA, other third-party consultants, and any other governmental entity or public authority with jurisdiction over the project may assist SJRA in the inspection and testing of the Work and Contractor agrees to and shall cooperate with any such consultants or authorities with respect to any such inspections and tests. If, on the basis of observation of the Work during construction, final inspection, and review of the final invoice and accompanying documentation as required by the Contract Documents, SJRA is satisfied that the Work has been completed and Contractor's other obligations under the Contract Documents have been fulfilled and there are no outstanding claims, SJRA will pay to Contractor the balance due Contractor under the terms of the Contract. Owner will issue a certificate of Final Completion to Contractor which establishes the Final Completion date. Final payment, constituting the entire unpaid balance of the Contract Price, will be made by the SJRA to Contractor after final completion and acceptance of the Work by the SJRA, and Contractor's execution and delivery to SJRA of the Affidavit of Bills Paid and Waiver and Release. The making and acceptance of final payment will constitute a waiver of all claims by Contractor against SJRA other than those previously made in writing and still unsettled at the time of the final payment.

ARTICLE 5
CONTRACTOR OBLIGATIONS AND REPRESENTATIONS

5.1 Contractor has examined and carefully studied the Contract Documents and other related data identified in SJRA's request for bids, proposals or quotes for the Work and supply of the Goods.

5.2 Contractor has visited the site of the Work and become familiar with and is satisfied as to general, local, and site conditions that may affect cost, progress, and performance of the Work. Contractor has attended any mandatory pre-submittal conference or site visit required by SJRA, and had the opportunity to ask any questions of SJRA relevant to Contractor's performance and completion of the Work and supply of the Goods.

5.3 Contractor is familiar with and is satisfied as to all federal, state, and local laws and regulations that may affect cost, progress, and performance of the Work and supply of the Goods.

5.4 Contractor has carefully studied all: (1) reports of explorations and tests of subsurface conditions at or contiguous to the site of the Work and all drawings of physical conditions in or relating to existing surface or subsurface structures at or contiguous to the site which have been identified in Contract Documents or made available to Contractor by SJRA, and (2) reports and drawings of hazardous environmental conditions, if any, at the site of the Work which have been identified in the Contract Documents.

5.5 Contractor has obtained and carefully studied (or assumes responsibility for having done so) all additional or supplementary examinations, investigations, explorations, tests, studies, and data concerning conditions (surface and subsurface) at or contiguous to the site which may affect cost, progress, or performance of the Work or which relate to any aspect of the means, methods, techniques, sequences, and procedures of construction to be employed by Contractor, including applying specific means, methods,

techniques, sequences, and procedures of construction, if any, expressly required by the Contract Documents to be employed by Contractor, and safety precautions and programs incident thereto.

5.6 Contractor does not consider that any further examinations, investigations, explorations, tests, studies, or data are necessary for performance of the Work or supply of the Goods, at Contract Price, within Contract Time, and in accordance with the Contract Documents.

5.7 Contractor is aware of the general nature of any on-going operations and/or work to be performed by the SJRA and others at the site of the Work, and Contractor shall perform the Work and supply of the Goods, in such manner as to minimize any impact on any on-going operations and/or work to be performed by the SJRA and others at the site of the Work, and Contractor shall cooperate with SJRA and others to coordinate the Work with any on-going operations and/or work to be performed by the SJRA and others at the site of the Work.

5.8 Contractor has correlated information known to Contractor, information and observations obtained from visits to the site of the Work, reports and drawings identified in the Contract Documents or made available to Contractor by SJRA, and all additional examinations, investigations, explorations, tests, studies, and data with the Contract Documents.

5.9 Contractor has given SJRA prompt written notice of all conflicts, errors, ambiguities, or discrepancies that Contractor has discovered in the Contract Documents, and the written resolution thereof by SJRA is acceptable to Contractor. If Contractor fails to provide SJRA with prompt written notice of any conflicts, errors, ambiguities, or discrepancies that Contractor knew of, or in using reasonable diligence should have known, then Contractor shall be responsible for correction of such conflicts, errors, ambiguities, or discrepancies and damages related thereto.

5.10 The Contract Documents are generally sufficient to indicate and convey understanding of all requirements for performance and furnishing of the Work.

5.11 Contractor hereby agrees that the following terms, conditions, verifications, certifications, and representations apply to and are incorporated into this Agreement for all purposes, and Contractor shall deliver to SJRA signed and notarized verifications prior to commencement of any Work:

(a) With respect to performing the Work and providing the Goods hereunder, Contractor shall comply with any applicable Equal Employment Opportunity and/or Affirmative Action ordinances, rules, or regulations during the term of this Agreement.

(b) Pursuant to Texas Local Government Code Chapter 176, Contractor shall submit a signed Texas Ethics Commission ("TEC") Conflict of Interest Questionnaire ("CIQ") at the time Contractor submits this signed Agreement to SJRA. TEC Form CIQ and information related to same may be obtained from TEC website by visiting https://www.ethics.state.tx.us/forms/conflict/. If Contractor certifies that there are no Conflicts of Interest, Contractor shall indicate so by writing name of Contractor's firm and "No Conflicts" on the TEC Form CIQ.

(c) If Contractor is a privately held entity, then pursuant to Texas Government Code Section 2252.908 and the rules promulgated thereunder by the TEC, Contractor shall submit a completed and signed TEC Form 1295 with a certificate number assigned by the TEC to SJRA at the time Contractor submits this signed Agreement to SJRA. TEC Form 1295 and information related to same may be obtained from TEC website by visiting https://www.ethics.state.tx.us/filinginfo/1295/. Contractor agrees and acknowledges that this Agreement shall be of no force and effect unless and until Contractor has submitted said form to SJRA, if and to the extent such form is required under Government Code § 2252.908 and the rules promulgated thereunder by the TEC.

(d) As required by Chapter 2271, Texas Government Code, Contractor hereby verifies that Contractor, including a wholly owned subsidiary, majority-owned subsidiary, parent company or affiliate of the same, does not boycott Israel and will not boycott Israel through the term of this Agreement. The term "boycott Israel" in this Paragraph has the meaning assigned to such term in Section 808.001 of the Texas Government Code, as amended.

(e) Pursuant to Chapter 2252, Texas Government Code, Contractor represents and certifies that, at the time of execution of this Agreement, neither Contractor, nor any wholly owned subsidiary, majority-owned subsidiary, parent company or affiliate of the same, is engaged in business with Iran, Sudan, or any terrorist organization, and is a company listed by the Texas Comptroller of Public Accounts under Sections 2270.0201 or 2252.153 of the Texas Government Code.

(f) As required by Section 2274.002, Texas Government Code (as added by Senate Bill 13, 87th Texas Legislature, Regular Session), as amended, Contractor hereby verifies that Contractor, including any wholly owned subsidiary, majority-owned subsidiary, parent company or affiliate of the same, does not boycott energy companies, and will not boycott energy companies during the term of this Agreement. The term “boycott energy companies” in this Paragraph shall have the meaning assigned to the term "boycott energy company" in Section 809.001, Texas Government Code, as amended.

(g) As required by Section 2274.002, Texas Government Code (as added by Senate Bill 19, 87th Texas Legislature, Regular Session, "SB 19"), as amended, Contractor hereby verifies that Contractor, including any wholly owned subsidiary, majority-owned subsidiary, parent company or affiliate of the same, (i) does not have a practice, policy, guidance or directive that discriminates against a firearm entity or firearm trade association, and (ii) will not discriminate against a firearm entity or firearm trade association during the term of this Agreement. The term “discriminate against a firearm entity or trade association” in this Paragraph shall have the meaning assigned to such term in Section 2274.001(3), Texas Government Code (as added by SB 19), as amended.

(h) Pursuant to Chapter 2274 of the Texas Government Code (as added by Senate Bill 2116, 87th Legislature, Regular Session), as amended, and to the extent this Agreement grants to Contractor direct or remote access to the control of critical infrastructure, excluding access specifically allowed for product warranty and support, Contractor verifies that neither Contractor, including any wholly owned subsidiary, majority-owned subsidiary, parent company, or affiliate of the same, nor any of its sub-contractors are: (i) owned or controlled by (a) individuals who are citizens of China, Iran, North Korea, Russia, or a designated country; or (b) a company or other entity, including a governmental entity, that is owned or controlled by citizens of or is directly controlled by the government of China, Iran, North Korea, Russia, or a designated country; or (ii) headquartered in China, Iran, North Korea, Russia or a designated country. The term “designated country” in this Paragraph means a country designated by the Governor as a threat to critical infrastructure under Section 2274.0103, Texas Government Code. The term “critical infrastructure” in this Paragraph shall have the meaning assigned to such term in Section 2274.0101, Texas Government Code.

Contractor acknowledges and agrees that projects of SJRA may be subject to review and approval by other third parties. Accordingly, as and when requested by SJRA, Contractor shall submit such information and cooperate with the other third parties to the extent necessary to undergo any such review or obtain any such approval.

5.12 Contractor warrants that (1) all Goods, including but not limited to all materials and equipment furnished under this Agreement will be new and of good quality unless otherwise expressly provided herein; (2) all Work will be performed in a good and workmanlike manner, and free from defects in material and workmanship; and (3) all Work and Goods provided, will conform to the requirements of the Contract Documents. Work not conforming to these requirements, including any substitutions not properly approved

and authorized in writing by SJRA, may be considered defective. The Contractor shall promptly correct all Work and Goods provided, rejected by SJRA as failing to conform to the requirements of the Contract Documents. The Contractor shall bear all costs of correcting such rejected Work or rejected Goods, including but not limited to the costs of uncovering the Work, and costs of repairing or replacing other work or goods, property or improvements of SJRA damaged as a result of Contractor's defective Work, defective Goods, or Contractor's correction of its defective Work or defective Goods, and any additional inspections or testing required. In addition to the Contractor's other obligations including but not limited to any other implied or express warranties under the Contract Documents, the Contractor shall, for a period of one (1) year after completion of the Work, correct all Work and supplied Goods not conforming to the requirements of the Contract Documents at Contractor's sole cost and expense. If the Contractor fails to correct non-conforming Work and supplied Goods, within a reasonable time, SJRA may correct it and Contractor shall promptly pay SJRA all costs of correction. Nothing contained in this Paragraph 5.12 shall be construed to establish a period of limitation with respect to other obligations which the Contractor might have under the Contract Documents or at law or in equity. Establishment of the one-year period for correction of Work and supplied Goods, as described in this Paragraph 5.12 relates only to the specific obligation of the Contractor to correct the Work and supplied Goods, and has no relationship to the time within which the obligation to comply with the Contract Documents and any implied warranties may be sought to be enforced, nor to the time within which legal proceedings may be commenced to establish the Contractor's liability with respect to the Contractor's obligations other than specifically to correct the Work and supplied Goods.

5.13 Contractor shall not subcontract the performance of the entire Work, supply of Goods, or the supervision and direction of the Work without SJRA's prior written consent. Contractor shall not employ any subcontractor, whether initially or as a substitute, against whom SJRA may have reasonable objection. Contractor shall enter into written agreements with all subcontractors which specifically bind the subcontractors to the applicable terms and conditions of the Contract Documents for the benefit of SJRA. All damage, injury or loss to any property caused, directly or indirectly, in whole or in part, by Contractor or any subcontractor, supplier or any person or organization directly or indirectly employed by any of them to perform or furnish any of the Work or anyone for whose acts any of them may be liable, shall be remedied by Contractor (except to the extent of damage or loss attributable to errors or omissions in the drawings or specifications (unless Contractor had knowledge of the error or omission or using reasonable care should have known of the error and Contractor failed to report same), or to the acts or omissions of Owner or anyone employed by Owner, or anyone for whose acts any of them may be liable other than Contractor or its agent, or employee, or subcontractors of any tier).

5.14 In accordance with Chapter 2258 of the Texas Government Code, Contractor shall pay and shall require that each of its subcontractors pay not less than the general prevailing rate of per diem wages in the locality in which the Work is to be performed for each craft or type of worker needed to execute the Work, and the prevailing rate for legal holiday and overtime work, as determined by SJRA. Such prevailing rates are those determined by the United States Department of Labor, and are available at https://sam.gov/content/wage-determinations

5.15 Contractor shall maintain a work force adequate to accomplish the Work within the Contract Time. Contractor agrees to employ only orderly and competent workers, skillful in performance of the Work. Contractor and any subcontractor, and their respective employees, may not use or possess any alcoholic or other intoxicating beverages, illegal drugs or controlled substances while on the job or SJRA property, nor may such workers be intoxicated, or under the influence of alcohol or drugs, on the job. Subject to the applicable provision of Texas law, Contractor and any subcontractor and their respective employees, may not use or possess any firearms or other weapons while on the job or on SJRA property. If the SJRA or an SJRA Division representative notifies Contractor that any of worker or representative is incompetent, disorderly, abusive, or disobedient, has knowingly or repeatedly violated safety regulations, has possessed any firearms in contravention of the applicable provisions of Texas Law or this Agreement, or has possessed or was under the influence of alcohol or drugs on the job, Contractor shall immediately remove such worker or representative, including any officer or owner of Contractor, from performing the Work, and may not employ such worker or

representative again on the Work without SJRA's prior written consent. Contractor shall at all times maintain good discipline and order on SJRA property in all matters pertaining to this Work.

5.16 Contractor agrees to assign and hereby assigns to SJRA any rights it may have to bring antitrust suits against its manufacturers or suppliers for overcharges on materials incorporated in the Work growing out of illegal price fixing agreements. Contractor further agrees to cooperate with SJRA should SJRA wish to prosecute suits against manufacturers or suppliers for illegal price fixing.

5.17 Contractor shall be fully responsible to SJRA for all acts and omissions of the subcontractors, manufacturers, or suppliers and other persons and organizations performing or furnishing any of the Work under a direct or indirect contract with Contractor just as Contractor is responsible for Contractor's own acts and omissions. Nothing in the Contract Documents shall create for the benefit of any such subcontractor, manufacturer, or supplier or other person or organization any contractual relationship between SJRA and any such subcontractor, supplier, manufacturer or other person or organization, nor shall it create any obligation on the part of SJRA to pay or to see to the payment of any moneys due any such subcontractor, manufacturer or supplier or other person or organization except as may otherwise be required by laws and regulations.

5.18 Contractor shall be solely responsible for efficiently scheduling and coordinating the Work of subcontractors, manufacturers, suppliers and other persons and organizations performing or furnishing any of the Work under a direct or indirect contract with Contractor in order to avoid any delays or inefficiencies in the prosecution of the Work. Contractor shall require all subcontractors, manufacturers, suppliers and such other persons and organizations performing or furnishing the any of the Work to communicate with the designated SJRA Division representative through Contractor.

5.19 Contractor shall pay each subcontractor, manufacturer and supplier their appropriate share of payments made to Contractor not later than ten (10) days from Contractor's receipt of payment from SJRA. To the extent allowed by Texas law, SJRA shall be deemed to be a third party beneficiary to each subcontract and may, if SJRA elects, following a termination of the Contractor, require that the subcontractor(s) perform all or a portion of unperformed duties and obligations under its subcontract(s) for the benefit of SJRA, rather than the Contractor; however, if SJRA requires any such performance by a subcontractor for SJRA's direct benefit, then SJRA shall be bound and obligated to pay such subcontractor the reasonable value for all Work performed by subcontractor to the date of termination of the Contractor, less payments to Contractor for such subcontractor's work, and for all Work performed by subcontractor thereafter. In the event that SJRA elects to invoke its right under this Paragraph. SJRA will provide written notice of such election to the terminated Contractor and the affected subcontractor(s).

5.20 Contractor shall be responsible at all times for compliance with applicable patents or copyrights encompassing, in whole or in part, any design, device, material, or process utilized directly or indirectly, in the performance of the Work or the formulation of any of the exhibits hereto. SJRA reserves the right to provide its own defense to any suit or claim of infringement of any patent or copyright in which event **CONTRACTOR SHALL INDEMNIFY AND SAVE HARMLESS SJRA FROM ALL COSTS AND EXPENSES OF SUCH DEFENSE AS WELL AS SATISFACTION OF ALL JUDGMENTS ENTERED AGAINST SJRA**. SJRA shall have the right to stop the Work and /or terminate this Agreement at any time in the event SJRA discovers that Contractor's work methodology includes the use of any infringing design, device, material or process.

ARTICLE 6
INDEMNIFICATION; MISCELLANEOUS PROVISIONS

6.1 **Indemnification.**

6.1.1 **TO THE FULLEST EXTENT PERMITTED BY LAWS AND REGULATIONS, CONTRACTOR SHALL DEFEND, INDEMNIFY AND HOLD HARMLESS THE SJRA AND ITS OFFICERS, DIRECTORS, EMPLOYEES, AGENTS, CONSULTANTS, AND OTHER CONTRACTORS (EACH AN "INDEMNITEE"**

AND COLLECTIVELY, THE "INDEMNITEES") FROM AND AGAINST ALL CLAIMS, COSTS, LOSSES, AND DAMAGES (INCLUDING BUT NOT LIMITED TO ALL FEES AND CHARGES OF ENGINEERS, ARCHITECTS, ATTORNEYS, AND OTHER PROFESSIONALS AND ALL COURT OR ARBITRATION OR OTHER DISPUTE RESOLUTION COSTS) ARISING OUT OF OR RELATING TO THE PERFORMANCE OF THE WORK OR THE SUPPLY OF THE GOODS, PROVIDED THAT ANY SUCH CLAIM, COST, LOSS, OR DAMAGE IS ATTRIBUTABLE TO BODILY INJURY, SICKNESS, DISEASE, OR DEATH, OR TO INJURY TO OR DESTRUCTION OF TANGIBLE PROPERTY (OTHER THAN THE WORK OR THE GOODS THEMSELVES), INCLUDING THE LOSS OF USE RESULTING THEREFROM, BUT ONLY TO THE EXTENT CAUSED BY ANY NEGLIGENT ACT OR OMISSION OF CONTRACTOR, ANY SUBCONTRACTOR, ANY SUPPLIER, OR ANY INDIVIDUAL OR ENTITY DIRECTLY OR INDIRECTLY EMPLOYED BY CONTRACTOR, ANY SUBCONTRACTOR, OR ANY SUPPLIER TO PERFORM ANY OF THE WORK OR SUPPLY ANY OF THE GOODS, OR ANYONE FOR WHOSE ACTS CONTRACTOR, ANY SUBCONTRACTOR, OR ANY SUPPLIER MAY BE LIABLE, AND EVEN IF ANY SUCH CLAIM, COST, LOSS OR DAMAGE IS CAUSED IN PART BY THE NEGLIGENT ACT OR OMISSION OF AN INDEMNITEE.

6.1.2 In any and all claims against the Indemnitees by any employee (or the survivor or personal representative of such employee) of Contractor, any subcontractor, any supplier, or any individual or entity directly or indirectly employed by Contractor, any subcontractor, or any supplier to perform any of the Work or to supply any of the Goods, or anyone for whose acts Contractor, any subcontractor, or any supplier may be liable, the indemnification obligation under this Article shall not be limited in any way by any limitation on the amount or type of damages, compensation, or benefits payable by or for Contractor or any such subcontractor, supplier, or other individual or entity under workers' compensation acts, disability benefit acts, or other employee benefit acts.

6.1.3 Contractor's obligations under this Agreement to defend, indemnify and hold harmless SJRA shall not be limited in any way by any insurance required of Contractor by this Agreement or otherwise provided or maintained by Contractor. Any insurance obligations of Contractor under this Agreement are independent from Contractor's obligations under this Agreement to defend, indemnify and hold harmless SJRA.

6.2 **Assignment of Contract**. No assignment of any rights under or interests in this Agreement will be binding on another Party hereto without the written consent of the Party sought to be bound, and unless specifically stated to the contrary in any written consent to an assignment, no assignment will release or discharge the assignor from any duty or responsibility under the Contract Documents.

6.3 **Successors and Assigns**. The SJRA and Contractor each binds itself, its partners, successors, permitted assigns, and its legal representatives to the other Party hereto, its partners, successors, permitted assigns, and its legal representatives in respect to all covenants, agreements, and obligations contained in the Contract Documents.

6.4 **Termination of Contract.** SJRA may terminate this Agreement without cause and for its convenience at any time upon **thirty (30)** days' written notice. Upon the Contractor's receipt of such notice, the Contractor shall cease performing the Work immediately. The Contractor shall be compensated for the Work satisfactorily performed and Goods satisfactorily delivered, prior to the termination date.

6.5 **Dispute Resolution.** This Agreement and any disputes related to it shall be governed by and construed in accordance with the laws of the State of Texas, without regard to its conflict or choice of law principles. Contractor agrees and acknowledges that Contractor's obligations under this Agreement must be performed in whole or in part in Montgomery County, Texas, and venue of any and all legal proceedings between SJRA and the Contractor shall lie in Montgomery County, Texas. If Contractor brings any claim against SJRA and Contractor does not prevail with respect to such claim, Contractor shall be liable for all attorneys' fees and costs incurred by SJRA as a result of such claim.

6.6 **Independent Contractor.** It is understood and agreed that the relationship of Contractor to SJRA shall be that of an independent contractor. Nothing contained herein or inferable here from shall be deemed or construed to (1) make the Contractor the agent, servant, or employee of SJRA, or (2) create any partnership, joint venture, or other association between SJRA and Contractor. Contractor shall be solely responsible for all means, methods, techniques and safety measures utilized in performance of the Work and the supply of the Goods.

6.7 **Safety.** Contractor agrees that, as between SJRA and Contractor, Contractor shall be solely responsible for the safety of its employees, and the establishment and enforcement of all safety precautions, programs and practices in connection with the Work as necessary to protect all persons and property from injury, death, loss or damage arising out of or related to the Work and to the supply of the Goods, including but not limited to the erection and maintenance of barricades, installation of warning signage, and institution of other traffic and/or pedestrian control measures, and Contractor shall at all times comply with all health, safety and environmental federal, state and local laws, codes, regulations, ordinances and permits applicable to the Work and to the supply of the Goods, including but not limited to the Occupational Safety and Health Act of 1970 (OSHA) as amended and the regulations thereto, all requirements of the Texas Commission on Environmental Quality, and the Centers for Disease Control and Prevention (CDC).

6.8 **Use of Premises.** Contractor shall confine construction equipment, the storage of materials and equipment, and the operations of workers to the site of the Work and land and areas identified in and permitted by the Contract Documents, and other land and areas permitted by laws and regulations, rights-of-way, permits and easements, and shall not unreasonably encumber the site of the Work with construction equipment or other materials or equipment. During the progress of the Work and on a daily basis, Contractor shall keep the site of the Work free from any accumulations of waste materials, rubbish and other debris resulting from the Work. Contractor shall provide such personnel, waste containers and/or equipment necessary to maintain an orderly, clean and safe work site. Contractor shall keep all streets, access streets, driveways, and areas of public access, walkways, and other designated areas clean and open at all times. Contractor shall remove all waste materials, rubbish and debris from and about the site of the Work at the end of each work day. At the completion of the Work, Contractor shall also remove all tools, appliances, construction equipment and machinery, and surplus materials. Contractor shall leave the site of the Work clean, and restore to original condition all property not designated for alteration by the Contact Documents. If the Contractor fails to clean up at the end of each work day or restore the site of the Work at the completion of the Work, SJRA may do so and the cost thereof will be charged to the Contractor and may be offset against any sum otherwise due Contractor.

6.9 **Legal Compliance.** Contractor shall comply with all federal, state and local laws, codes, regulations, ordinances and permits applicable to performance of the Work, including but not limited to all wage and employment laws, and the Immigration Reform and Control Act of 1986, as amended, and Contractor shall maintain and require that its subcontractors maintain any and all licenses required for performance of the Work.

6.10 **Stop Work Notice.** SJRA may issue an immediate "Stop Work Notice" in the event the Contractor is observed performing Work in a manner that is in violation of federal, state and local laws, codes, regulations, ordinance and permits, or in a manner that is determined by SJRA to be unsafe to either life or property. Upon Contractor's receipt of the Stop Work Notice, the Contractor shall immediately cease all Work until notified by SJRA that the violation or unsafe condition has been corrected. The Contractor shall be liable for all costs incurred by SJRA as a result of the issuance of such Stop Work Notice.

6.11 **Insurance.** Contractor shall obtain and maintain insurance as provided in **Exhibit B** attached hereto and incorporated herein.

6.12 **SJRA's Rights and Remedies.** All rights and remedies of SJRA under the Contract Documents are cumulative and in addition to all other rights and remedies available to SJRA at law or in equity.

6.13 **Warranty**. Contractor shall provide a one (1) year warranty document. This warranty shall be substantially similar to those warranties in Paragraph 5.12 above, and shall obligate the Contractor to provide all equipment, materials, workmanship, and labor at no charge during the Warranty period, and to correct any defect excluding any damage caused by misuse, abuse, vandalism, or acts of God.

6.14 **Shipping Terms of Sale.** SJRA shipping terms of sale is FOB Destination.

6.15 **Removal, Transportation and Return of SJRA's Property, Equipment or Parts.** Contractor is responsible for any damages occurring to SJRA property, equipment or parts while Contractor, or any subcontractor or third party acting on behalf of Contractor, is (i) working on SJRA property, equipment or parts; or (ii) transporting SJRA property, equipment or parts.

6.16 **Confidentiality.** Neither Contractor nor any of its subcontractors shall publish or release any publicity or public relations materials of any kind concerning or relating to this Agreement, the Work or the activities of SJRA, unless such materials have first been reviewed and approved in writing by SJRA. This provision shall not apply to mandatory reports which Contractor or its subcontractors are required by law to file with governmental authorities.

ARTICLE 7
ENUMERATION OF CONTRACT DOCUMENTS

7.1 The Contract Documents are comprised of this Agreement and the following exhibits:

Exhibit A: Contractor's Proposal
Exhibit B: Insurance Requirements
Exhibit C: Contractor's Certificate of Insurance
Exhibit D: Bond Forms
- Payment Bond
- Performance Bond

Exhibit E: Technical Specifications and Drawings
(these may be provided in separate attachments)

7.2 The Contract Documents may only be amended, modified, or supplemented in writing agreed to and signed by the Parties.

7.3 The Contract Documents represent the entire and integrated agreement between SJRA and the Contractor and supersede all prior and contemporaneous negotiations, representations, or agreements, either written or oral.

7.4 To the extent there are any conflicts between the terms and provisions of this Agreement and the other Contract Documents, this Agreement shall control.

***** Remainder of Page Left Blank Intentionally *****

ARTICLE 8
SIGNATURES

8.1 This Agreement may be executed in counterparts, each of which shall be deemed an original, but all of which together shall be deemed to be one and the same agreement. A signed copy of this Agreement delivered by facsimile, email, or other means of electronic transmission shall be deemed to have the same legal effect as delivery of an original signed copy of this Agreement. Duplicate copies of duly executed and delivered counterparts of this Agreement shall be deemed to have the same full force and effect as originals and may be relied upon as such. Notwithstanding the foregoing, SJRA and Contractor agree that this Agreement may be executed using electronic signatures only at the option and in the sole discretion of SJRA, and, in such event, the provisions of the Uniform Electronic Transaction Act, Chapter 332, Texas Business and Commerce Code, as amended, and any applicable policies and procedures of SJRA regarding electronic signatures shall apply. SJRA reserves the right to require an original, hard copy executed Agreement.

IN WITNESS WHEREOF, the Parties have entered into this Agreement as of the day and year herein below written.

EXECUTED this _____ day of _____, 2026.

SAN JACINTO RIVER AUTHORITY:

_____
Aubrey A. Spear, General Manager

APPROVED AS TO CONTENT:

_____
Samir Solanki, Chief Operations Officer

APPROVED AS TO FORM:

_____
Amy L. Sims, General Counsel

Mallard Underground Utilities, LLC:

_____
John Berryman, Owner, Date

EXHIBIT A
CONTRACTOR'S PROPOSAL

EXHIBIT B
INSURANCE REQUIREMENTS

For purposes of this Exhibit B, "ISO" means Insurance Services Office.

1.0 Contractor Insurance Representations to SJRA.

1.1 It is expressly understood and agreed that the insurance coverages required herein:

1.1.1 Represent SJRA's minimum requirements and are not to be construed to void or limit Contractor's indemnity obligations as contained in the Contract, nor represent in any manner a determination of the insurance coverages Contractor should or should not maintain for its own protection; and

1.1.2 Are being, or have been, obtained by Contractor in support of Contractor's liability and indemnity obligations under the Contract. Irrespective of the requirements as to insurance to be carried as provided for herein, the insolvency, bankruptcy or failure of any insurance company carrying insurance of Contractor, or the failure of any insurance company to pay claims accruing, shall not be held to affect, negate or waive any of the provisions of the Contract.

1.2 Failure to obtain and maintain the required insurance shall constitute a material breach of, and default under, this Contract. If Contractor shall fail to remedy such breach, Contractor will be liable for any and all costs, liabilities, damages and penalties resulting to SJRA from such breach, unless a written waiver of the specific insurance requirement(s) is provided to Contractor by SJRA. In the event of any failure by Contractor to comply with the insurance requirements of the Contract, SJRA may, without in any way compromising or waiving any right or remedy at law or in equity, on notice to Contractor, purchase such insurance, at Contractor's expense, provided that SJRA shall have no obligation to do so and if SJRA shall do so, Contractor shall not be relieved of or excused from the obligation to obtain and maintain such insurance amounts and coverages.

2.0 Conditions Affecting All Insurance Required Herein.

2.1 Cost of Insurance. All insurance coverage shall be provided at Contractor's sole expense.

2.2 Maintenance of Insurance. All insurance coverage shall be maintained in effect with limits not less than those set forth below at all times during the performance of the Work and through the correction period of paragraph 5.13 of the Agreement, and for such longer periods of time as may be set forth herein.

2.3 Status and Rating of Insurance Company. All insurance coverage shall be written through insurance companies authorized to do business in the State of Texas and rated no less than A-: VII in the most current edition of A. M. Best's Key Rating Guide.

2.4 Restrictive, Limiting, or Exclusionary Endorsements. All insurance coverage shall be provided to SJRA in compliance with the requirements herein.

2.5 Limits of Liability. The limits of liability may be provided by a single policy of insurance or by a combination of primary and umbrella policies, but in no event shall the total limits of liability available for any one occurrence or accident be less than the amount required herein.

2.6 Notice of Cancellation or Material Change in Coverage. Contractor and the insurer shall provide SJRA with thirty days prior written notice of cancellation or material change in coverage.

2.7 Waiver of Rights of Recovery and Subrogation. The Contractor hereby waives its rights of recovery from the SJRA with regard to all causes of property and/or liability loss and shall cause a waiver of subrogation endorsement to be provided in favor of SJRA on all insurance coverage carried by the Contractor, whether required herein or not.

2.8 Deductible/Retention. Except as otherwise specified herein, no insurance required herein shall contain a deductible or self-insured retention in excess of $10,000 without prior written approval of SJRA. All deductibles and/or retentions shall be paid by, assumed by, for the account of, and at Contractor's sole risk. Contractor shall not be reimbursed for same. If the insurance contains a self-insured retention, the policy shall allow the self-insured retention to be paid or satisfied by a party other than the named insured.

2.9 Minimum Limits. The inclusion of required minimum insurance limits in the Contract Documents shall not be construed as limiting the SJRA's or other additional insured's rights under any policy with higher limits. The minimum insurance limits set forth in this Exhibit D shall be deemed to be amended to any higher limits actually contained in Contractor's insurance policies.

3.0 Intentionally Omitted.

4.0 Insurance Required.

4.1 The following insurance shall be maintained in effect with limits not less than those set forth below at all times during the term of the Agreement and thereafter as required.

PLEASE NOTE: These requirements should provide general guidance only, additional requirements based on project specifics of the contract may be required. Contract amounts over limits will require excess coverage to cover the difference. Combined single limits and excess coverage must equal the Contract Amount (CA).

Risk Level TIER 1	Coverage		Contract Amount <=$25k	>$25k-$75k	>$75k-$1M	>=$1M-$2M	>$2M
Administrative/ General Business Services **Services:** Routine/regularly scheduled services such as landscaping, janitorial, or maintenance- elevators **Contract Type:** ➢ General Services Contract ➢ Standby Services Agreement	**Commercial General Liability (CGL)** (Premises/Completed Operations)	Each Occurrence	$300k	$500K	$1M	$1.5M	= $2M
		Fire Damage	$100k	$250k	$1M	$1.5M	= $2M
		Personal & ADV injury	$300k	$500k	$1M	$1.5M	= $2M
		Aggregate	$600K	$750k	$2M	$3M	= $4M
		Premises/Operations	$300k	$500k	$1M	$1.5M	=$2M
		Products/Completed Operations	$300K	$500k	$1M	$1.5M	= $2M
	Workers Compensation	Per occurrence bodily injury	$500k	$500k	$500k	$500k	$500k
		Per occurrence bodily injury by disease	$500k	$500k	$500k	$500k	$500k
		Policy Limit for Bodily Injury Disease	$500k	$500k	$500k	$500k	$500k
	Business Auto Liability Owned, Non-Owned, Hired, Injury and Property coverage for all	Bodily Injury	$250k	$500k	$500k	$1M	= $2M
		Property Damage	$100k	$500k	$500k	$1M	= $2M
		Combined Single Limit (Bodily & Property Damage)	$500k	$1M	$1M	$2M	= $2M
	Professional Liability	Professional required based on the scope of work	$250k	$500k	$1M	$2M	= $2M
	Cyber Liability	Cyber required based on the scope of work	$250k	$500k	$1M	$2M	= $2M

4.2 Commercial General Liability Insurance

4.2.1 Coverage. Such insurance shall cover liability arising out of all locations and operations of Contractor, including but not limited to liability assumed under the Contract Documents (including the tort liability of another assumed in a business contract). Defense shall be provided as an additional benefit and not included within the limit of liability.

4.2.2 Form. Commercial General Liability Occurrence form (at least as broad as an unmodified current ISO edition of CG 00 01) to include, but not be limited to, coverage for the Contractor's premises, operations (including completed operations), products, and contractual assumption of tort liability.

4.2.3 Amount of Insurance. Coverage shall be provided with limits of not less than the above stated table.

4.2.4 Required Endorsements.

a. Additional Insured. Additional insured status shall be provided in favor of the SJRA on a combination of ISO forms CG 20 10 10 01 and CG 20 37 10 01 or their combined equivalent. It is the intent of the parties to this Agreement that this Additional Insured status shall include coverage for completed operations and for the SJRA's concurrent and sole negligence. Notwithstanding the foregoing, if Subchapter C of Chapter 151 of the Texas Insurance Code applies to the Contract, this Additional Insured obligation shall not require or provide coverage the scope of which is prohibited under Subchapter C of Chapter 151 of the Texas Insurance Code for an agreement to indemnify, hold harmless or defend.

b. Designated Construction Project(s) Aggregate Limit. The aggregate limit shall apply separately to this Agreement through use of an ISO CG 25 03 05 09 endorsement or its equivalent.

c. Notice of Cancellation or Material Change in Coverage, as required in 2.6, above.

d. Primary and Non-Contributing Liability. All insurance coverage required of the Contractor shall be primary to and shall seek no contribution from all insurance available to SJRA, with SJRA's insurance being excess, secondary and non-contributing. This CGL coverage shall be endorsed to provide such primary and non-contributing liability coverage.

e. Waiver of Rights of Recovery and Subrogation, as required in 2.7, above.

4.2.5 Continuing Commercial General Liability Insurance. Contractor shall maintain such insurance in identical coverage, form and amount, including required endorsements, for at least three (3) years following Date of Final Completion of the Work to be performed under the Contract.

4.3 Auto Liability Insurance

4.3.1 Coverage. Such insurance shall cover liability arising out of any auto (including owned, hired, and non-owned).

4.3.2 Form. Business Auto form (at least as broad as an unmodified current ISO edition of CA 00 01).

4.3.3 Amount of Insurance. Coverage shall be provided with a limit of not less than the above stated table.

4.3.4 Required Endorsements.

a. Notice of Cancellation or Material Change in Coverage, as required in 2.6, above.

b. Waiver of Rights of Recovery and Subrogation, as required in 2.7, above.

c. Additional insured status in favor of the SJRA. Notwithstanding the foregoing, if Subchapter C of Chapter 151 of the Texas Insurance Code applied to the Contract, this Additional Insured obligation shall not require or provide coverage the scope of which is prohibited under Subchapter C of Chapter 151 of the Texas Insurance Code for an agreement to indemnify, hold harmless or defend.

d. Primary and Non-Contributing Liability. All insurance coverage required of the Contractor shall be primary to and shall seek no contribution from all insurance available to SJRA, with SJRA's insurance being excess, secondary and non-contributing. This Auto Liability Insurance coverage shall be endorsed to provide such primary and non-contributing liability coverage.

4.4 Workers' Compensation/Employer's Liability Insurance

4.4.1 Amounts of coverage shall be no less than Statutory Limits; each Accident and Disease (see requirements stated in table above).

4.5 Excess Liability Insurance

4.5.1 Coverage. Such insurance shall be excess over and be no less broad than all coverages described above (with the exception of Worker's Compensation) and shall include a drop-down provision.

4.5.2 Form. This policy shall have the same inception and expiration dates as the Commercial General Liability insurance required above.

4.5.3 Amount of Insurance. Coverage shall be provided with a limit of not less than the above stated table.

4.5.4 Continuing Excess Liability Insurance. Contractor shall maintain such insurance in identical coverage, form and amount, including required endorsements, for at least three (3) years following Date of Final Completion of the Work to be performed under the Contract.

4.5.5 Additional insured status shall be provided in favor of the SJRA. Notwithstanding the foregoing, if Subchapter C of Chapter 151 of the Texas Insurance Code applies to the Contract, this Additional Insured obligation shall not require or provide coverage the scope of which is prohibited under Subchapter C of Chapter 151 of the Texas Insurance Code for an agreement to indemnify, hold harmless or defend. This Excess Liability Insurance shall be primary to and shall seek no contribution from all insurance available to the SJRA, with SJRA's insurance being excess, secondary and non-contributing.

5.0 Evidence of Insurance.

5.1 Provision of Evidence. Evidence of the insurance coverage required to be maintained by Contractor, represented by certificates of insurance, evidence of insurance consistent with the requirements of Chapter 1811 of the Texas Insurance Code, and endorsements issued by the insurance company or its legal agent, must be furnished to SJRA not later than 15 days prior to commencement of Work. New certificates of insurance, evidence of insurance, and endorsements shall be provided to SJRA prior to the termination date of the current certificates of insurance, evidence of insurance, and endorsements.

5.2 Form. All liability insurance required herein shall be evidenced by ACORD form 25, "Certificate of Insurance", or if such form is not filed with and approved or deemed approved by the Texas Department of Insurance, then on a form filed with and approved by or deemed approved by the Texas Department of Insurance and acceptable to SJRA.

5.3 Specifications. Such certificates of insurance, evidence of insurance, and endorsements shall specify the following, excluding, however, any such specifications as may be prohibited under Chapter 1811 of the Texas Insurance Code:

5.3.1 SJRA as a certificate holder with correct mailing address.
5.3.2 Insured's name, which must match that on this Contract.
5.3.3 Insurance companies affording each coverage, policy number of each coverage, policy dates of each coverage, all coverages and limits described herein, and signature of authorized representative of insurance company.
5.3.4 Producer of the certificate with correct address and phone number listed.
5.3.5 Additional insured status required herein.
5.3.6 Amount of any deductibles and/or retentions.
5.3.7 Cancellation and material change in coverage notification as required by the policy or any endorsement thereto in accordance with Section 3.6 of this Exhibit D.
5.3.8 Designated Construction Project Aggregate Limits required herein.
5.3.9 Primary and non-contributing status required herein.
5.3.10 Waivers of subrogation required herein.

5.4 Required Endorsements. A copy of the Commercial General Liability additional insured, waiver of subrogation and primary/noncontributing endorsement(s) or policy language shall also be provided.

5.5 Failure to Obtain. Failure of SJRA to demand such certificate or other evidence of full compliance with these insurance requirements or failure of SJRA to identify a deficiency from evidence that is provided shall not be construed as a waiver of Contractor's obligation to maintain such insurance.

5.6 Copies. Upon request of SJRA, Contractor shall provide to SJRA a copy of all insurance policies required herein within ten (10) days of any such request. Renewal policies, if necessary, shall be delivered to SJRA at least ten (10) days prior to the expiration of the previous policy.

5.7 Commencement of Work. Commencement of Work without provision of the required certificate of insurance, evidence of insurance and/or required endorsements, or without compliance with any other provision of this Contract, shall not constitute a waiver by SJRA of any rights of SJRA. SJRA shall have the right, but not the obligation, of prohibiting Contractor or any subcontractor from performing any Work until such certificate of insurance, evidence of insurance and/or required endorsements are received and approved by SJRA.

6.0 Intentionally Omitted.

7.0 Insurance Requirements of Contractor's Subcontractors and for Contractor's Property and Equipment.

7.1 Insurance similar to that required of Contractor shall be provided by all subcontractors and sub-subcontractors (or provided by Contractor on behalf of subcontractors or sub-subcontractors) to cover operations performed under any subcontract agreement. Limits of subcontractors' coverage shall be per Contractor's standard requirements. Contractor shall be held responsible for any modification in these insurance requirements as they apply to subcontractors and sub-subcontractors. Contractor shall maintain certificates of insurance from all subcontractors and sub-subcontractors containing provisions similar to those listed herein (modified to recognize that the certificate is from a subcontractor or sub-subcontractor) enumerating, among other things, the waivers of subrogation, additional insured status, and primary liability as required herein, and make them available to SJRA upon request. Subcontractor's Commercial General Liability insurance policies shall name the SJRA as an additional insured.

7.2 Contractor is fully responsible for loss and damage to its property on the site, including tools and equipment, and shall take necessary precautions to prevent vandalism, theft, burglary, pilferage and unexplained disappearance of property. Any insurance covering Contractor's or its subcontractor's property shall be Contractor's and its subcontractor's sole and complete means or recovery for any such loss. To the extent any loss is not covered by said insurance or subject to any deductible or co-insurance, Contractor shall not be reimbursed for same. Should Contractor or its subcontractors choose to self-insure this risk, it is expressly agreed that Contractor hereby waives, and shall cause its subcontractors to waive, any claim for damage or loss to said property in favor of SJRA.

8.0 Release and Waiver.

Contractor hereby releases, and shall cause its subcontractors and sub-subcontractors to release, SJRA from any and all claims or causes of action whatsoever which Contractor and/or its subcontractors or sub-subcontractors might otherwise now or hereafter possess resulting in or from or in any way connected with any loss covered by insurance, whether required herein or not, or which should have been covered by insurance required herein, including the deductible and/or uninsured portion thereof, maintained and/or required to be maintained by Contractor and/or its subcontractors and sub-subcontractors pursuant to this Contract. Contractor shall be responsible for any Builder's Risk deductible applicable to the Work. Contractor waives all damages and rights of recovery against the SJRA and SJRA's separate contractors for damages caused by fire or other causes of loss to the extent covered by any Builder's Risk property insurance applicable to the Contractor's work under the Contract, except such rights as Contractor may have to proceeds of such insurance as Contractor's interest may appear.

EXHIBIT C
CONTRACTOR'S CERTIFICATE OF INSURANCE

EXHIBIT D
BOND FORMS

Performance Bond
Payment Bond

PERFORMANCE BOND

STATE OF TEXAS

COUNTY OF _____

KNOW ALL MEN BY THESE PRESENTS: That _____ _____(Contractor) of the City of _____, County of _____, and State of Texas, as Principal, and _____ authorized under the Laws of the State of Texas to act as surety on bonds for principals, as Surety, are held and firmly bound unto San Jacinto River Authority (Owner), in the penal sum of _____ Dollars ($_____) for the payment whereof, the said Principal and Surety bind themselves, and their heirs, administrators, executors, successors and assigns, jointly and severally, by these presents:

WHEREAS, the Principal has entered into a certain written contract with the Owner, dated the _____ day of _____, 20___, for construction of: _____ _____(the "Contract"),which Contract is hereby referred to and made a part hereof as fully and to the same extent as if copied at length herein.

NOW, THEREFORE, THE CONDITION OF THIS OBLIGATION IS SUCH, that if the said Principal shall faithfully perform said Contract and shall in all respects duly and faithfully observe and perform all and singular the covenants, conditions and agreements in and by said Contract agreed and covenanted by the Principal to be observed and performed, within the time provided therein and any extensions thereof that may be granted by the Owner, and during the life of any guarantees or warranties contained in or required under said Contract, and shall also well and truly perform all the undertakings, covenants, terms, conditions and agreements of any and all modifications of said Contract that may hereafter be made, then this obligation shall be void; otherwise to remain in full force and effect;

PROVIDED, HOWEVER, that this bond is executed pursuant to the provisions of Chapter 2253 of the Texas Government Code as amended and all liabilities on this bond shall be determined in accordance with the provisions of said statute to the same extent as if it were copied at length herein.

Surety, for value received, stipulates and agrees that no change, extension of time, alteration or addition to the terms of the Contract, or to work performed thereunder, or the plans, specifications, or drawings, accompanying the same, shall in anyway affect its obligation on this bond, and it does hereby waive notice of any such change, extension of time, alteration or addition to the terms of the Contract, or the work to be performed thereunder.

IN WITNESS WHEREOF, the said Principal and Surety have signed and sealed this instrument on the _____ day of _____, 20__.

_____	_____
Principal	Surety
BY:_____	BY:_____
TITLE:_____	TITLE:_____
ADDRESS:	PHYSICAL ADDRESS:
_____	_____

_____

_____

MAILING ADDRESS FOR NOTICE OF CLAIMS:

_____

_____

_____

TELEPHONE:_____

LOCAL RECORDING AGENT
PERSONAL IDENTIFICATION NUMBER:

_____

The name and address of the Resident Agent of Surety is:

_____

_____

_____

_____

STATUTORY PAYMENT BOND

STATE OF TEXAS

COUNTY OF _____

KNOW ALL MEN BY THESE PRESENTS: That _____
_____
(Contractor) of the City of _____, County of _____, and State of Texas, as Principal, and _____
authorized under the Laws of the State of Texas to act as surety on bonds for principals, as Surety, are held and firmly bound unto San Jacinto River Authority (Owner), in the penal sum of _____ Dollars ($_____) for the payment whereof, the said Principal and Surety bind themselves, and their heirs, administrators, executors, successors and assigns, jointly and severally, by these presents:

WHEREAS, the Principal has entered into a certain written contract with the Owner, dated the _____ day of _____, 20___ for construction of: _____
_____(the "Contract"), which Contract is hereby referred to and make a part hereof as fully and to the same extent as if copied at length herein.

NOW, THEREFORE, THE CONDITIONS OF THIS OBLIGATION IS SUCH, that if the said Principal shall pay all claimants supplying labor and material to him or a Sub-Contractor in the prosecution of the work provided for in said Contract, then, this obligation shall be void; otherwise to remain in full force and effect;

PROVIDED, HOWEVER, That this bond is executed pursuant to the provisions of Chapter 2253 of the Texas Government Code as amended and all liabilities on this bond shall be determined in accordance with the provisions of said statute to the same extent as if it were copied at length herein.

Surety, for value received, stipulates and agrees that no change, extension of time, alteration or addition to the terms of the Contract, or to work performed thereunder, or the plans, specifications, or drawings, accompanying the same, shall in anyway affect its obligation on this bond, and it does hereby waive notice of any such change, extension of time, alteration or addition to the terms of the Contract, or the work to be performed thereunder.

IN WITNESS WHEREOF, the said Principal and Surety have signed and sealed this instrument on the _____ day of _____, 20__.

_____	_____
Principal	Surety
BY:_____	BY:_____
TITLE:_____	TITLE:_____
ADDRESS:	PHYSICAL ADDRESS:
_____	_____
_____	_____
	MAILING ADDRESS FOR NOTICE OF CLAIMS:

_____

_____

_____

TELEPHONE:_____

LOCAL RECORDING AGENT
PERSONAL IDENTIFICATION NUMBER:

_____

The name and address of the Resident Agent of Surety is:

_____

_____

_____

_____

4828-1341-3979, v. 1

EXHIBIT E
TECHNICAL SPECIFICATIONS AND DRAWINGS
(these may be provided in separate attachments)

SJRA
SAN JACINTO RIVER AUTHORITY

Board Communication

Item No.	Agenda Item	Date
6.3	Consider authorizing the General Manager to execute the initial term of a General Services Agreement with LASS Engineering and Construction, Inc., to provide on-call water conveyance, embankments, and dirt work services for all SJRA Divisions.	**10/22/2026**

BACKGROUND INFORMATION

Firm Name:	LASS Engineering and Construction, Inc.
Type of Agreement:	Initial Term - General Services Agreement
Service:	Water Conveyance, Embankments, and Dirt Work
Contract Number:	26-0030-A
Initial Contract Term Amount:	$275,000.00

The San Jacinto River Authority seeks to enter into an agreement with LASS Engineering and Construction, Inc., a qualified firm possessing substantial experience and expertise in providing on-call services for water conveyance systems, embankments, levees, and related earthwork. Services may include excavation and material handling; repair of berms, levees, canals, embankments, and dams resulting from burrowing animal activity, storm damage, or erosion; repair or replacement of riprap; and other dirt work and maintenance activities throughout any SJRA Division as needed. This agreement will provide a responsive resource to address both routine and emergency infrastructure maintenance and repair requirements. The contract with LASS Engineering and Construction, Inc., is for a not-to-exceed amount of $275,000 for all SJRA Divisions, and will be due for renewal on October 22, 2027, which is the first year of an up to 3-year contract.

FUNDING SOURCE: O&M

ATTACHMENTS: General Services Agreement

RECOMMENDED ACTION

Authorize the General Manager to execute the initial term of a General Services Agreement with LASS Engineering and Construction, Inc., in an amount not to exceed $275,000, to provide on-call water conveyance, embankments, and dirt work services for all SJRA Divisions. Sufficient funds were budgeted and are available in Fiscal Year 2027 for this purpose.

SJRA
SAN JACINTO RIVER AUTHORITY

STANDARD FORM OF AGREEMENT

GENERAL SERVICES

CONTRACT # 26-0030-A

ON-CALL SERVICES FOR WATER CONVEYANCE SYSTEMS, EMBANKMENTS AND DIRT WORK

Procurement Department
1577 Dam Site Road
Conroe, Texas 77304

GENERAL SERVICES AGREEMENT
Contract #26-0030

Project: *On-Call Services for Water Conveyance Systems, Embankments and Dirt Work*

Project Location: All San Jacinto River Authority Locations

THE PARTIES

The SJRA: The SAN JACINTO RIVER AUTHORITY

- *General and Administration Division - PO Box 329, Conroe, TX 77305 936-588-3111*
- *Flood Management Division – PO Box 329, Conroe, TX 77305 936.588.3111*
- *GRP Division - PO Box 329, Conroe, TX 77305 936-588-1111*
- *Lake Conroe Division - PO Box 329, Conroe, TX 77305 936-588-1111*
- *Highlands Division – PO Box 861, Highlands, TX 77562 281-843-3300*
- *Woodlands Division – PO Box 7537, The Woodlands, TX 77387 281-362-4385*

(Contact Person / Phone / e-mail) Grady Garrow/936 588 7181/ggarrow@sjra.net

and

Contractor: LASS Engineering and Construction, Inc.

(Address for Written Notice) 4302 Creekmont Drive, Houston, TX 77091

(Contact Person / Phone / email) Shawn Schmitt/281 300 0402/ sschmitt@lassenc.com

The SJRA and the Contractor may be referred to herein individually as a "Party" and together as the "Parties".

FOR THE MUTUAL PROMISES SET OUT HEREIN THE PARTIES AGREE AS FOLLOWS:

ARTICLE 1
WORK OF THE CONTRACT

1.1 Contractor shall perform the Work and provide the Goods in accordance with the terms of this Agreement and any and all Exhibits attached hereto and the documents enumerated in Paragraph 7.1 below, all of which documents are incorporated herein (collectively the "Contract Documents"). Contractor shall provide all labor, materials, equipment, services, supervision, tools, facilities, utilities, and other items necessary for the proper and timely performance and completion of the following generally described work (herein the "Work") and supply of the following generally described goods (herein the "Goods"), in strict accordance with the terms of the Contract Documents and as reasonably inferable from the Contract Documents as necessary for such Work to be complete and serviceable and such Goods to be fully and finally supplied:

Contractor to provide on-call services for water conveyance systems, embankments, and dirt work repairs.

1.2 Changes in the Work and changes with respect to the supply of the Goods may be accomplished after execution of this Agreement, and without invalidating this Agreement, by Amendment. A "Amendment" is a

written instrument prepared by SJRA and signed by SJRA and Contractor, stating their agreement upon all of the following: (1) the change in the Work; (2) the amount of the adjustment, if any, in the Contract Price; and (3) the extent of the adjustment, if any, in the Contract Time. All changes in the Work shall be performed under applicable provisions of the Contract Documents, and the Contractor shall proceed promptly, unless otherwise provided in the Amendment. A field directive or field order, or any other order, direction, instruction, clarification, information or request by SJRA or any of its consultants, or any other representative of SJRA, shall not be recognized as having any effect upon the Contract Price or the Contract Time, unless documented as an Amendment, and Contractor shall not have any claim for adjustment of the Contract Price or the Contract Time as a result thereof, unless Contractor shall, prior to complying therewith and in no event later than five (5) days from the date such directive, order, etc. was given, submit a written claim therefor.

1.3 Contractor shall obtain and pay for all construction permits, licenses and fees (as legally required) for prosecution of the Work and supply of the Goods, except as otherwise provided in the Contract Documents.

ARTICLE 2
PERIOD OF SERVICE

2.1 This Agreement shall become effective upon execution of this Agreement by SJRA and the Contractor, and shall remain in effect for an initial term of one (1) year with the option to renew for two (2) additional one (1) year terms for a total of three (3) years unless terminated earlier in writing in accordance herein. Any renewal must be in writing and executed by both the Parties. At the sole option of SJRA, the Agreement may be further extended as an emergency extension, on a month-to-month basis. The Work to be undertaken and/or the supply of Goods pursuant to this Agreement will be required to commence within fourteen (14) days of delivery of a notice to proceed, or issuance of a SJRA Purchase Order. **TIME IS OF THE ESSENCE IN THIS AGREEMENT**. The Contractor shall make all reasonable efforts to complete the Work and the supply of the Goods as expeditiously as possible and to meet the schedule established by the Parties. The Work and the supply of the Goods shall be accomplished per the scope of services as identified in the Contract Documents

ARTICLE 3
CONTRACT PRICE

3.1 The maximum, not-to-exceed compensation payable to Contractor under this Contract within the initial year, is **$275,000.00** SJRA will not pay Contractor any amount in excess of the not-to-exceed compensation of this Contract for completing the Work and will not pay for Work performed before the date this Contract becomes effective or after the termination of this Contract. If the maximum compensation is increased by amendment of this Contract, the amendment must be fully effective before Contractor performs Work subject to the amendment.

The SJRA will pay Contractor in current funds for Contractor's completion of the Work and supply of the Goods, in accordance with the Contract Documents, the Contract Price as follows:

[X] Unit prices for actual quantities of Work performed, based upon the Contractor's Proposal attached hereto as **Exhibit A,** and delivery tickets, field measurements, or other documentation acceptable to SJRA as satisfactory evidence of actual quantities of Work performed. Unit prices include all Contractor costs, overhead and profit for the Work.

The unit prices are based upon the estimated quantities stated in the Contractor's Proposal. If quantities of Work actually performed are less or more than the quantities stated in the Contractor's Proposal by twenty percent (20%) or more, whether as a result of inaccurate estimated quantities or changes in the Work requested by SJRA, and if as a result of any such reduction in quantity Contractor demonstrates to SJRA's satisfaction that Contractor is unable to recover its fixed costs of the Work, or if as a result of any such increase in quantity

Contractor's costs of the Work are reduced by subcontractor or supplier rate or price reductions or discounts, economies of scale, or otherwise, the applicable unit prices shall be equitably adjusted by Amendment.

3.2 Contractor shall pay only, and Contractor warrants and represents that the Contract Price includes only, those sales, consumer, use and other similar taxes required to be paid by Contractor in accordance with the laws and regulations of the State of Texas in the performance of this public works contract. SJRA is a political subdivision of the State of Texas and exempt from the payment of state and local sales, use and excise taxes.

3.3 Non-Appropriation: All funds for payment by SJRA under this Agreement are subject to the availability of an annual appropriation for this purpose by SJRA. In the event of non-appropriation of funds by the Board of Directors of SJRA for the services provided under the Agreement, SJRA will terminate the Agreement, without termination charge or other liability, on the last day of the then-current fiscal year or when the appropriation made for the then-current year for the services covered by this Agreement is spent, whichever event occurs first (the "Non-Appropriation Date"). If at any time funds are not appropriated for the continuance of this Agreement, cancellation shall be accepted by the Contractor on thirty (30) days prior written notice, but failure to give such notice shall be of no effect and SJRA shall not be obligated under this Agreement beyond the Non-Appropriation Date.

ARTICLE 4
PAYMENT PROCEDURES

4.1 Contractor shall submit no more than one (1) invoice per month, in a form acceptable to SJRA and including supporting documentation requested by SJRA, requesting payment for Work performed in accordance with the requirements of the Contract Documents during the prior month. The SJRA will make payments in compliance with the Texas "prompt payment law" which provides that payments owed by SJRA for the Goods and Work are due no later than 45 days after the Goods are received by SJRA, the Work is completed, or an invoice for the Goods or Work is received, whichever is later, unless there is a bona fide dispute between SJRA and Contractor about the Goods delivered or the Work performed that causes the payment to be late, or the terms of a federal contract, grant, regulation, or statute prevent SJRA from making a timely payment with federal funds, or the invoice is not mailed to the person to whom it is addressed in strict accordance with any instruction on the Purchase Order relating to the payment. (Ref Chapter 2251 of Texas Gov. Code). SJRA shall notify Contractor in writing of a disputed amount in an invoice within twenty-one (21) days of receipt. Such notice shall include a detailed statement of the amount of the invoice which is disputed.

Unless otherwise requested by SJRA, invoices shall be (a) delivered electronically to ap@sjra.net with a copy to [Construction Manager via email], and (b) rendered separately for each Purchase Order and not cover more than one Purchase Order. All invoices must be itemized. Invoices must be fully documented as to labor materials, and equipment provided.

Each invoice shall include:

- Contractor's name, address and telephone number
- An invoice date and number
- SJRA Purchase Order number
- Contract number
- Quantity of hours for each type of labor as detailed on the pricing sheet (Exhibit A) multiplied by the contracted labor price.
- Original cost of materials + contract markup (attach a copy of the original materials Invoice to SJRA invoice).
- Line items total
- Total cost of repair or reconditioning at or below the not-to-exceed price on accepted

Proposal.
- Amounts previously paid on such Purchase Order, if any.
- Seller's "remit to" address
- Freight or Additional supporting documentation of third party charges, if applicable

Each invoice line should include:

- A full description of the material/service ordered, and the SJRA part number if provided on the Purchase Order.
- Quantities ordered, quantities delivered, unit prices and extended prices if applicable.
- Date(s) of services/delivery
- If the Purchase Order has multiple lines, the invoice lines should specify the Purchase Order line being charged

A proforma invoice shall be sent to the SJRA Division Manager Representative, as identified in the Notice to Proceed, and include the following:

- Test results verifying correct working conditions for EACH motor repaired or reconditioned must be received by the SJRA Division Manager Representative before payment will be remitted.
- Test results may either accompany the delivery of the motor or be emailed SAME DAY to the SJRA Division Manager Representative.
- Test results shall contain the Purchase Order number, quotation number and invoice number.

Complete and accurate information is required for timely payment. SJRA will, within twenty-one (21) calendar days after receipt of each invoice, accept and process such invoice for payment, or return the invoice to Contractor indicating SJRA's reasons for refusing to issue payment. If an invoice contains errors or fails to include required information, a corrected invoice should be submitted and payment delays will be incurred. The payment terms commence with performance of Work and/or the delivery of conforming Goods and the receipt of a correct invoice.

4.2 SJRA may withhold or nullify the whole or part of any payment to such extent as may be necessary, but in no event greater than 110% of the disputed amount, on account of:

(a) defective Work not remedied;
(b) third party claims filed or reasonable evidence indicating probable filing of such claims;
(c) failure of Contractor to timely or properly make payments to subcontractors or for labor, materials or equipment;
(d) reasonable evidence that the Work cannot be completed for the unpaid balance of the Contract Price;
(e) damage to SJRA or another contractor for which Contractor is responsible;
(f) reasonable evidence that the Work will not be completed within the Contract Time, and that the unpaid balance would not be adequate to cover actual or liquidated damages or economic disincentives for the anticipated delay;
(g) failure of Contractor to submit or update a schedule of values, submittal schedule, or construction project schedule in accordance with the Contract Documents;
(h) failure of Contractor to maintain a record of changes on drawings and documents;
(i) failure of Contractor to maintain weekly payroll reports and, as applicable, provide copies of reports in a timely manner upon request of Owner;
(j) Contractor's neglect or unsatisfactory prosecution of the Work, including failure to clean up;
(k) property damage claims that are the responsibility of the Contractor; or
(l) failure of Contractor to comply with any provision of the Contract Documents.

Any failure by SJRA to exercise its right to withhold all or any part of payment requested in any invoice as provided in this Paragraph 4.2 shall not be and shall not be construed as (i) a waiver of SJRA's right to do so in the future, or (ii) evidence that any of the circumstances identified in Subparagraphs 4.2(a) through (l) above have not occurred. When the above reasons for withholding payment are remedied or no longer exist, Contractor shall resubmit an invoice for the withheld amounts. Payment will be made within forty-five (45) calendar days of receipt by SJRA of an approved invoice, subject to Paragraph 4.3 below.

4.3 For purposes of this Agreement, "Final Completion" shall be the point in time when SJRA determines that all Work has been completed and the Agreement fully performed except for those obligations that survive final payment. Upon written notice from Contractor that the entire Work is complete, SJRA will make a final inspection with Contractor and provide written notice of all particulars in which this inspection reveals that the Work is incomplete or defective. Contractor shall immediately take such measures as are necessary to complete such Work or remedy such deficiencies. SJRA, other third-party consultants, and any other governmental entity or public authority with jurisdiction over the project may assist SJRA in the inspection and testing of the Work and Contractor agrees to and shall cooperate with any such consultants or authorities with respect to any such inspections and tests. If, on the basis of observation of the Work during construction, final inspection, and review of the final invoice and accompanying documentation as required by the Contract Documents, SJRA is satisfied that the Work has been completed and Contractor's other obligations under the Contract Documents have been fulfilled and there are no outstanding claims, SJRA will pay to Contractor the balance due Contractor under the terms of the Contract. Owner will issue a certificate of Final Completion to Contractor which establishes the Final Completion date. Final payment, constituting the entire unpaid balance of the Contract Price, will be made by the SJRA to Contractor after final completion and acceptance of the Work by the SJRA, and Contractor's execution and delivery to SJRA of the Affidavit of Bills Paid and Waiver and Release. The making and acceptance of final payment will constitute a waiver of all claims by Contractor against SJRA other than those previously made in writing and still unsettled at the time of the final payment.

ARTICLE 5
CONTRACTOR OBLIGATIONS AND REPRESENTATIONS

5.1 Contractor has examined and carefully studied the Contract Documents and other related data identified in SJRA's request for bids, proposals or quotes for the Work and supply of the Goods.

5.2 Contractor has visited the site of the Work and become familiar with and is satisfied as to general, local, and site conditions that may affect cost, progress, and performance of the Work. Contractor has attended any mandatory pre-submittal conference or site visit required by SJRA, and had the opportunity to ask any questions of SJRA relevant to Contractor's performance and completion of the Work and supply of the Goods.

5.3 Contractor is familiar with and is satisfied as to all federal, state, and local laws and regulations that may affect cost, progress, and performance of the Work and supply of the Goods.

5.4 Contractor has carefully studied all: (1) reports of explorations and tests of subsurface conditions at or contiguous to the site of the Work and all drawings of physical conditions in or relating to existing surface or subsurface structures at or contiguous to the site which have been identified in Contract Documents or made available to Contractor by SJRA, and (2) reports and drawings of hazardous environmental conditions, if any, at the site of the Work which have been identified in the Contract Documents.

5.5 Contractor has obtained and carefully studied (or assumes responsibility for having done so) all additional or supplementary examinations, investigations, explorations, tests, studies, and data concerning conditions (surface and subsurface) at or contiguous to the site which may affect cost, progress, or performance of the Work or which relate to any aspect of the means, methods, techniques, sequences, and procedures of construction to be employed by Contractor, including applying specific means, methods,

techniques, sequences, and procedures of construction, if any, expressly required by the Contract Documents to be employed by Contractor, and safety precautions and programs incident thereto.

5.6 Contractor does not consider that any further examinations, investigations, explorations, tests, studies, or data are necessary for performance of the Work or supply of the Goods, at Contract Price, within Contract Time, and in accordance with the Contract Documents.

5.7 Contractor is aware of the general nature of any on-going operations and/or work to be performed by the SJRA and others at the site of the Work, and Contractor shall perform the Work and supply of the Goods, in such manner as to minimize any impact on any on-going operations and/or work to be performed by the SJRA and others at the site of the Work, and Contractor shall cooperate with SJRA and others to coordinate the Work with any on-going operations and/or work to be performed by the SJRA and others at the site of the Work.

5.8 Contractor has correlated information known to Contractor, information and observations obtained from visits to the site of the Work, reports and drawings identified in the Contract Documents or made available to Contractor by SJRA, and all additional examinations, investigations, explorations, tests, studies, and data with the Contract Documents.

5.9 Contractor has given SJRA prompt written notice of all conflicts, errors, ambiguities, or discrepancies that Contractor has discovered in the Contract Documents, and the written resolution thereof by SJRA is acceptable to Contractor. If Contractor fails to provide SJRA with prompt written notice of any conflicts, errors, ambiguities, or discrepancies that Contractor knew of, or in using reasonable diligence should have known, then Contractor shall be responsible for correction of such conflicts, errors, ambiguities, or discrepancies and damages related thereto.

5.10 The Contract Documents are generally sufficient to indicate and convey understanding of all requirements for performance and furnishing of the Work.

5.11 Contractor hereby agrees that the following terms, conditions, verifications, certifications, and representations apply to and are incorporated into this Agreement for all purposes, and Contractor shall deliver to SJRA signed and notarized verifications prior to commencement of any Work:

(a) With respect to performing the Work and providing the Goods hereunder, Contractor shall comply with any applicable Equal Employment Opportunity and/or Affirmative Action ordinances, rules, or regulations during the term of this Agreement.

(b) Pursuant to Texas Local Government Code Chapter 176, Contractor shall submit a signed Texas Ethics Commission ("TEC") Conflict of Interest Questionnaire ("CIQ") at the time Contractor submits this signed Agreement to SJRA. TEC Form CIQ and information related to same may be obtained from TEC website by visiting https://www.ethics.state.tx.us/forms/conflict/. If Contractor certifies that there are no Conflicts of Interest, Contractor shall indicate so by writing name of Contractor's firm and "No Conflicts" on the TEC Form CIQ.

(c) If Contractor is a privately held entity, then pursuant to Texas Government Code Section 2252.908 and the rules promulgated thereunder by the TEC, Contractor shall submit a completed and signed TEC Form 1295 with a certificate number assigned by the TEC to SJRA at the time Contractor submits this signed Agreement to SJRA. TEC Form 1295 and information related to same may be obtained from TEC website by visiting https://www.ethics.state.tx.us/filinginfo/1295/. Contractor agrees and acknowledges that this Agreement shall be of no force and effect unless and until Contractor has submitted said form to SJRA, if and to the extent such form is required under Government Code § 2252.908 and the rules promulgated thereunder by the TEC.

(d) As required by Chapter 2271, Texas Government Code, Contractor hereby verifies that Contractor, including a wholly owned subsidiary, majority-owned subsidiary, parent company or affiliate of the same, does not boycott Israel and will not boycott Israel through the term of this Agreement. The term "boycott Israel" in this Paragraph has the meaning assigned to such term in Section 808.001 of the Texas Government Code, as amended.

(e) Pursuant to Chapter 2252, Texas Government Code, Contractor represents and certifies that, at the time of execution of this Agreement, neither Contractor, nor any wholly owned subsidiary, majority-owned subsidiary, parent company or affiliate of the same, is engaged in business with Iran, Sudan, or any terrorist organization, and is a company listed by the Texas Comptroller of Public Accounts under Sections 2270.0201 or 2252.153 of the Texas Government Code.

(f) As required by Section 2274.002, Texas Government Code (as added by Senate Bill 13, 87th Texas Legislature, Regular Session), as amended, Contractor hereby verifies that Contractor, including any wholly owned subsidiary, majority-owned subsidiary, parent company or affiliate of the same, does not boycott energy companies, and will not boycott energy companies during the term of this Agreement. The term “boycott energy companies” in this Paragraph shall have the meaning assigned to the term "boycott energy company" in Section 809.001, Texas Government Code, as amended.

(g) As required by Section 2274.002, Texas Government Code (as added by Senate Bill 19, 87th Texas Legislature, Regular Session, "SB 19"), as amended, Contractor hereby verifies that Contractor, including any wholly owned subsidiary, majority-owned subsidiary, parent company or affiliate of the same, (i) does not have a practice, policy, guidance or directive that discriminates against a firearm entity or firearm trade association, and (ii) will not discriminate against a firearm entity or firearm trade association during the term of this Agreement. The term “discriminate against a firearm entity or trade association” in this Paragraph shall have the meaning assigned to such term in Section 2274.001(3), Texas Government Code (as added by SB 19), as amended.

(h) Pursuant to Chapter 2274 of the Texas Government Code (as added by Senate Bill 2116, 87th Legislature, Regular Session), as amended, and to the extent this Agreement grants to Contractor direct or remote access to the control of critical infrastructure, excluding access specifically allowed for product warranty and support, Contractor verifies that neither Contractor, including any wholly owned subsidiary, majority-owned subsidiary, parent company, or affiliate of the same, nor any of its sub-contractors are: (i) owned or controlled by (a) individuals who are citizens of China, Iran, North Korea, Russia, or a designated country; or (b) a company or other entity, including a governmental entity, that is owned or controlled by citizens of or is directly controlled by the government of China, Iran, North Korea, Russia, or a designated country; or (ii) headquartered in China, Iran, North Korea, Russia or a designated country. The term “designated country” in this Paragraph means a country designated by the Governor as a threat to critical infrastructure under Section 2274.0103, Texas Government Code. The term “critical infrastructure” in this Paragraph shall have the meaning assigned to such term in Section 2274.0101, Texas Government Code.

Contractor acknowledges and agrees that projects of SJRA may be subject to review and approval by other third parties. Accordingly, as and when requested by SJRA, Contractor shall submit such information and cooperate with the other third parties to the extent necessary to undergo any such review or obtain any such approval.

5.12 Contractor warrants that (1) all Goods, including but not limited to all materials and equipment furnished under this Agreement will be new and of good quality unless otherwise expressly provided herein; (2) all Work will be performed in a good and workmanlike manner, and free from defects in material and workmanship; and (3) all Work and Goods provided, will conform to the requirements of the Contract Documents. Work not conforming to these requirements, including any substitutions not properly approved

and authorized in writing by SJRA, may be considered defective. The Contractor shall promptly correct all Work and Goods provided, rejected by SJRA as failing to conform to the requirements of the Contract Documents. The Contractor shall bear all costs of correcting such rejected Work or rejected Goods, including but not limited to the costs of uncovering the Work, and costs of repairing or replacing other work or goods, property or improvements of SJRA damaged as a result of Contractor's defective Work, defective Goods, or Contractor's correction of its defective Work or defective Goods, and any additional inspections or testing required. In addition to the Contractor's other obligations including but not limited to any other implied or express warranties under the Contract Documents, the Contractor shall, for a period of one (1) year after completion of the Work, correct all Work and supplied Goods not conforming to the requirements of the Contract Documents at Contractor's sole cost and expense. If the Contractor fails to correct non-conforming Work and supplied Goods, within a reasonable time, SJRA may correct it and Contractor shall promptly pay SJRA all costs of correction. Nothing contained in this Paragraph 5.12 shall be construed to establish a period of limitation with respect to other obligations which the Contractor might have under the Contract Documents or at law or in equity. Establishment of the one-year period for correction of Work and supplied Goods, as described in this Paragraph 5.12 relates only to the specific obligation of the Contractor to correct the Work and supplied Goods, and has no relationship to the time within which the obligation to comply with the Contract Documents and any implied warranties may be sought to be enforced, nor to the time within which legal proceedings may be commenced to establish the Contractor's liability with respect to the Contractor's obligations other than specifically to correct the Work and supplied Goods.

5.13 Contractor shall not subcontract the performance of the entire Work, supply of Goods, or the supervision and direction of the Work without SJRA's prior written consent. Contractor shall not employ any subcontractor, whether initially or as a substitute, against whom SJRA may have reasonable objection. Contractor shall enter into written agreements with all subcontractors which specifically bind the subcontractors to the applicable terms and conditions of the Contract Documents for the benefit of SJRA. All damage, injury or loss to any property caused, directly or indirectly, in whole or in part, by Contractor or any subcontractor, supplier or any person or organization directly or indirectly employed by any of them to perform or furnish any of the Work or anyone for whose acts any of them may be liable, shall be remedied by Contractor (except to the extent of damage or loss attributable to errors or omissions in the drawings or specifications (unless Contractor had knowledge of the error or omission or using reasonable care should have known of the error and Contractor failed to report same), or to the acts or omissions of Owner or anyone employed by Owner, or anyone for whose acts any of them may be liable other than Contractor or its agent, or employee, or subcontractors of any tier).

5.14 In accordance with Chapter 2258 of the Texas Government Code, Contractor shall pay and shall require that each of its subcontractors pay not less than the general prevailing rate of per diem wages in the locality in which the Work is to be performed for each craft or type of worker needed to execute the Work, and the prevailing rate for legal holiday and overtime work, as determined by SJRA. Such prevailing rates are those determined by the United States Department of Labor, and are available at https://sam.gov/content/wage-determinations

5.15 Contractor shall maintain a work force adequate to accomplish the Work within the Contract Time. Contractor agrees to employ only orderly and competent workers, skillful in performance of the Work. Contractor and any subcontractor, and their respective employees, may not use or possess any alcoholic or other intoxicating beverages, illegal drugs or controlled substances while on the job or SJRA property, nor may such workers be intoxicated, or under the influence of alcohol or drugs, on the job. Subject to the applicable provision of Texas law, Contractor and any subcontractor and their respective employees, may not use or possess any firearms or other weapons while on the job or on SJRA property. If the SJRA or an SJRA Division representative notifies Contractor that any of worker or representative is incompetent, disorderly, abusive, or disobedient, has knowingly or repeatedly violated safety regulations, has possessed any firearms in contravention of the applicable provisions of Texas Law or this Agreement, or has possessed or was under the influence of alcohol or drugs on the job, Contractor shall immediately remove such worker or representative, including any officer or owner of Contractor, from performing the Work, and may not employ such worker or

representative again on the Work without SJRA's prior written consent. Contractor shall at all times maintain good discipline and order on SJRA property in all matters pertaining to this Work.

5.16 Contractor agrees to assign and hereby assigns to SJRA any rights it may have to bring antitrust suits against its manufacturers or suppliers for overcharges on materials incorporated in the Work growing out of illegal price fixing agreements. Contractor further agrees to cooperate with SJRA should SJRA wish to prosecute suits against manufacturers or suppliers for illegal price fixing.

5.17 Contractor shall be fully responsible to SJRA for all acts and omissions of the subcontractors, manufacturers, or suppliers and other persons and organizations performing or furnishing any of the Work under a direct or indirect contract with Contractor just as Contractor is responsible for Contractor's own acts and omissions. Nothing in the Contract Documents shall create for the benefit of any such subcontractor, manufacturer, or supplier or other person or organization any contractual relationship between SJRA and any such subcontractor, supplier, manufacturer or other person or organization, nor shall it create any obligation on the part of SJRA to pay or to see to the payment of any moneys due any such subcontractor, manufacturer or supplier or other person or organization except as may otherwise be required by laws and regulations.

5.18 Contractor shall be solely responsible for efficiently scheduling and coordinating the Work of subcontractors, manufacturers, suppliers and other persons and organizations performing or furnishing any of the Work under a direct or indirect contract with Contractor in order to avoid any delays or inefficiencies in the prosecution of the Work. Contractor shall require all subcontractors, manufacturers, suppliers and such other persons and organizations performing or furnishing the any of the Work to communicate with the designated SJRA Division representative through Contractor.

5.19 Contractor shall pay each subcontractor, manufacturer and supplier their appropriate share of payments made to Contractor not later than ten (10) days from Contractor's receipt of payment from SJRA. To the extent allowed by Texas law, SJRA shall be deemed to be a third party beneficiary to each subcontract and may, if SJRA elects, following a termination of the Contractor, require that the subcontractor(s) perform all or a portion of unperformed duties and obligations under its subcontract(s) for the benefit of SJRA, rather than the Contractor; however, if SJRA requires any such performance by a subcontractor for SJRA's direct benefit, then SJRA shall be bound and obligated to pay such subcontractor the reasonable value for all Work performed by subcontractor to the date of termination of the Contractor, less payments to Contractor for such subcontractor's work, and for all Work performed by subcontractor thereafter. In the event that SJRA elects to invoke its right under this Paragraph. SJRA will provide written notice of such election to the terminated Contractor and the affected subcontractor(s).

5.20 Contractor shall be responsible at all times for compliance with applicable patents or copyrights encompassing, in whole or in part, any design, device, material, or process utilized directly or indirectly, in the performance of the Work or the formulation of any of the exhibits hereto. SJRA reserves the right to provide its own defense to any suit or claim of infringement of any patent or copyright in which event **CONTRACTOR SHALL INDEMNIFY AND SAVE HARMLESS SJRA FROM ALL COSTS AND EXPENSES OF SUCH DEFENSE AS WELL AS SATISFACTION OF ALL JUDGMENTS ENTERED AGAINST SJRA**. SJRA shall have the right to stop the Work and /or terminate this Agreement at any time in the event SJRA discovers that Contractor's work methodology includes the use of any infringing design, device, material or process.

ARTICLE 6
INDEMNIFICATION; MISCELLANEOUS PROVISIONS

6.1 **Indemnification.**

6.1.1 **TO THE FULLEST EXTENT PERMITTED BY LAWS AND REGULATIONS, CONTRACTOR SHALL DEFEND, INDEMNIFY AND HOLD HARMLESS THE SJRA AND ITS OFFICERS, DIRECTORS, EMPLOYEES, AGENTS, CONSULTANTS, AND OTHER CONTRACTORS (EACH AN "INDEMNITEE"**

AND COLLECTIVELY, THE "INDEMNITEES") FROM AND AGAINST ALL CLAIMS, COSTS, LOSSES, AND DAMAGES (INCLUDING BUT NOT LIMITED TO ALL FEES AND CHARGES OF ENGINEERS, ARCHITECTS, ATTORNEYS, AND OTHER PROFESSIONALS AND ALL COURT OR ARBITRATION OR OTHER DISPUTE RESOLUTION COSTS) ARISING OUT OF OR RELATING TO THE PERFORMANCE OF THE WORK OR THE SUPPLY OF THE GOODS, PROVIDED THAT ANY SUCH CLAIM, COST, LOSS, OR DAMAGE IS ATTRIBUTABLE TO BODILY INJURY, SICKNESS, DISEASE, OR DEATH, OR TO INJURY TO OR DESTRUCTION OF TANGIBLE PROPERTY (OTHER THAN THE WORK OR THE GOODS THEMSELVES), INCLUDING THE LOSS OF USE RESULTING THEREFROM, BUT ONLY TO THE EXTENT CAUSED BY ANY NEGLIGENT ACT OR OMISSION OF CONTRACTOR, ANY SUBCONTRACTOR, ANY SUPPLIER, OR ANY INDIVIDUAL OR ENTITY DIRECTLY OR INDIRECTLY EMPLOYED BY CONTRACTOR, ANY SUBCONTRACTOR, OR ANY SUPPLIER TO PERFORM ANY OF THE WORK OR SUPPLY ANY OF THE GOODS, OR ANYONE FOR WHOSE ACTS CONTRACTOR, ANY SUBCONTRACTOR, OR ANY SUPPLIER MAY BE LIABLE, AND EVEN IF ANY SUCH CLAIM, COST, LOSS OR DAMAGE IS CAUSED IN PART BY THE NEGLIGENT ACT OR OMISSION OF AN INDEMNITEE.

6.1.2 In any and all claims against the Indemnitees by any employee (or the survivor or personal representative of such employee) of Contractor, any subcontractor, any supplier, or any individual or entity directly or indirectly employed by Contractor, any subcontractor, or any supplier to perform any of the Work or to supply any of the Goods, or anyone for whose acts Contractor, any subcontractor, or any supplier may be liable, the indemnification obligation under this Article shall not be limited in any way by any limitation on the amount or type of damages, compensation, or benefits payable by or for Contractor or any such subcontractor, supplier, or other individual or entity under workers' compensation acts, disability benefit acts, or other employee benefit acts.

6.1.3 Contractor's obligations under this Agreement to defend, indemnify and hold harmless SJRA shall not be limited in any way by any insurance required of Contractor by this Agreement or otherwise provided or maintained by Contractor. Any insurance obligations of Contractor under this Agreement are independent from Contractor's obligations under this Agreement to defend, indemnify and hold harmless SJRA.

6.2 **Assignment of Contract**. No assignment of any rights under or interests in this Agreement will be binding on another Party hereto without the written consent of the Party sought to be bound, and unless specifically stated to the contrary in any written consent to an assignment, no assignment will release or discharge the assignor from any duty or responsibility under the Contract Documents.

6.3 **Successors and Assigns**. The SJRA and Contractor each binds itself, its partners, successors, permitted assigns, and its legal representatives to the other Party hereto, its partners, successors, permitted assigns, and its legal representatives in respect to all covenants, agreements, and obligations contained in the Contract Documents.

6.4 **Termination of Contract.** SJRA may terminate this Agreement without cause and for its convenience at any time upon **thirty (30)** days' written notice. Upon the Contractor's receipt of such notice, the Contractor shall cease performing the Work immediately. The Contractor shall be compensated for the Work satisfactorily performed and Goods satisfactorily delivered, prior to the termination date.

6.5 **Dispute Resolution.** This Agreement and any disputes related to it shall be governed by and construed in accordance with the laws of the State of Texas, without regard to its conflict or choice of law principles. Contractor agrees and acknowledges that Contractor's obligations under this Agreement must be performed in whole or in part in Montgomery County, Texas, and venue of any and all legal proceedings between SJRA and the Contractor shall lie in Montgomery County, Texas. If Contractor brings any claim against SJRA and Contractor does not prevail with respect to such claim, Contractor shall be liable for all attorneys' fees and costs incurred by SJRA as a result of such claim.

6.6 **Independent Contractor.** It is understood and agreed that the relationship of Contractor to SJRA shall be that of an independent contractor. Nothing contained herein or inferable here from shall be deemed or construed to (1) make the Contractor the agent, servant, or employee of SJRA, or (2) create any partnership, joint venture, or other association between SJRA and Contractor. Contractor shall be solely responsible for all means, methods, techniques and safety measures utilized in performance of the Work and the supply of the Goods.

6.7 **Safety.** Contractor agrees that, as between SJRA and Contractor, Contractor shall be solely responsible for the safety of its employees, and the establishment and enforcement of all safety precautions, programs and practices in connection with the Work as necessary to protect all persons and property from injury, death, loss or damage arising out of or related to the Work and to the supply of the Goods, including but not limited to the erection and maintenance of barricades, installation of warning signage, and institution of other traffic and/or pedestrian control measures, and Contractor shall at all times comply with all health, safety and environmental federal, state and local laws, codes, regulations, ordinances and permits applicable to the Work and to the supply of the Goods, including but not limited to the Occupational Safety and Health Act of 1970 (OSHA) as amended and the regulations thereto, all requirements of the Texas Commission on Environmental Quality, and the Centers for Disease Control and Prevention (CDC).

6.8 **Use of Premises.** Contractor shall confine construction equipment, the storage of materials and equipment, and the operations of workers to the site of the Work and land and areas identified in and permitted by the Contract Documents, and other land and areas permitted by laws and regulations, rights-of-way, permits and easements, and shall not unreasonably encumber the site of the Work with construction equipment or other materials or equipment. During the progress of the Work and on a daily basis, Contractor shall keep the site of the Work free from any accumulations of waste materials, rubbish and other debris resulting from the Work. Contractor shall provide such personnel, waste containers and/or equipment necessary to maintain an orderly, clean and safe work site. Contractor shall keep all streets, access streets, driveways, and areas of public access, walkways, and other designated areas clean and open at all times. Contractor shall remove all waste materials, rubbish and debris from and about the site of the Work at the end of each work day. At the completion of the Work, Contractor shall also remove all tools, appliances, construction equipment and machinery, and surplus materials. Contractor shall leave the site of the Work clean, and restore to original condition all property not designated for alteration by the Contact Documents. If the Contractor fails to clean up at the end of each work day or restore the site of the Work at the completion of the Work, SJRA may do so and the cost thereof will be charged to the Contractor and may be offset against any sum otherwise due Contractor.

6.9 **Legal Compliance.** Contractor shall comply with all federal, state and local laws, codes, regulations, ordinances and permits applicable to performance of the Work, including but not limited to all wage and employment laws, and the Immigration Reform and Control Act of 1986, as amended, and Contractor shall maintain and require that its subcontractors maintain any and all licenses required for performance of the Work.

6.10 **Stop Work Notice.** SJRA may issue an immediate "Stop Work Notice" in the event the Contractor is observed performing Work in a manner that is in violation of federal, state and local laws, codes, regulations, ordinance and permits, or in a manner that is determined by SJRA to be unsafe to either life or property. Upon Contractor's receipt of the Stop Work Notice, the Contractor shall immediately cease all Work until notified by SJRA that the violation or unsafe condition has been corrected. The Contractor shall be liable for all costs incurred by SJRA as a result of the issuance of such Stop Work Notice.

6.11 **Insurance.** Contractor shall obtain and maintain insurance as provided in **Exhibit B** attached hereto and incorporated herein.

6.12 **SJRA's Rights and Remedies.** All rights and remedies of SJRA under the Contract Documents are cumulative and in addition to all other rights and remedies available to SJRA at law or in equity.

6.13 **Warranty**. Contractor shall provide a one (1) year warranty document. This warranty shall be substantially similar to those warranties in Paragraph 5.12 above, and shall obligate the Contractor to provide all equipment, materials, workmanship, and labor at no charge during the Warranty period, and to correct any defect excluding any damage caused by misuse, abuse, vandalism, or acts of God.

6.14 **Shipping Terms of Sale.** SJRA shipping terms of sale is FOB Destination.

6.15 **Removal, Transportation and Return of SJRA's Property, Equipment or Parts.** Contractor is responsible for any damages occurring to SJRA property, equipment or parts while Contractor, or any subcontractor or third party acting on behalf of Contractor, is (i) working on SJRA property, equipment or parts; or (ii) transporting SJRA property, equipment or parts.

6.16 **Confidentiality.** Neither Contractor nor any of its subcontractors shall publish or release any publicity or public relations materials of any kind concerning or relating to this Agreement, the Work or the activities of SJRA, unless such materials have first been reviewed and approved in writing by SJRA. This provision shall not apply to mandatory reports which Contractor or its subcontractors are required by law to file with governmental authorities.

ARTICLE 7
ENUMERATION OF CONTRACT DOCUMENTS

7.1 The Contract Documents are comprised of this Agreement and the following exhibits:

Exhibit A: Contractor's Proposal
Exhibit B: Insurance Requirements
Exhibit C: Contractor's Certificate of Insurance
Exhibit D: Bond Forms
- Payment Bond
- Performance Bond

Exhibit E: Technical Specifications and Drawings
(these may be provided in separate attachments)

7.2 The Contract Documents may only be amended, modified, or supplemented in writing agreed to and signed by the Parties.

7.3 The Contract Documents represent the entire and integrated agreement between SJRA and the Contractor and supersede all prior and contemporaneous negotiations, representations, or agreements, either written or oral.

7.4 To the extent there are any conflicts between the terms and provisions of this Agreement and the other Contract Documents, this Agreement shall control.

***** Remainder of Page Left Blank Intentionally *****

ARTICLE 8
SIGNATURES

8.1 This Agreement may be executed in counterparts, each of which shall be deemed an original, but all of which together shall be deemed to be one and the same agreement. A signed copy of this Agreement delivered by facsimile, email, or other means of electronic transmission shall be deemed to have the same legal effect as delivery of an original signed copy of this Agreement. Duplicate copies of duly executed and delivered counterparts of this Agreement shall be deemed to have the same full force and effect as originals and may be relied upon as such. Notwithstanding the foregoing, SJRA and Contractor agree that this Agreement may be executed using electronic signatures only at the option and in the sole discretion of SJRA, and, in such event, the provisions of the Uniform Electronic Transaction Act, Chapter 332, Texas Business and Commerce Code, as amended, and any applicable policies and procedures of SJRA regarding electronic signatures shall apply. SJRA reserves the right to require an original, hard copy executed Agreement.

IN WITNESS WHEREOF, the Parties have entered into this Agreement as of the day and year herein below written.

EXECUTED this _____ day of _____, 2026.

SAN JACINTO RIVER AUTHORITY:

_____
Aubrey A. Spear, General Manager

APPROVED AS TO CONTENT:

_____
Samir Solanki, Chief Operations Officer

APPROVED AS TO FORM:

_____
Amy L. Sims, General Counsel

LASS Engineering and Construction Inc.:

_____
Daniel D. Lloyd, Vice President, Date

EXHIBIT A
CONTRACTOR'S PROPOSAL

EXHIBIT B
INSURANCE REQUIREMENTS

For purposes of this Exhibit B, "ISO" means Insurance Services Office.

1.0 Contractor Insurance Representations to SJRA.

1.1 It is expressly understood and agreed that the insurance coverages required herein:

1.1.1 Represent SJRA's minimum requirements and are not to be construed to void or limit Contractor's indemnity obligations as contained in the Contract, nor represent in any manner a determination of the insurance coverages Contractor should or should not maintain for its own protection; and

1.1.2 Are being, or have been, obtained by Contractor in support of Contractor's liability and indemnity obligations under the Contract. Irrespective of the requirements as to insurance to be carried as provided for herein, the insolvency, bankruptcy or failure of any insurance company carrying insurance of Contractor, or the failure of any insurance company to pay claims accruing, shall not be held to affect, negate or waive any of the provisions of the Contract.

1.2 Failure to obtain and maintain the required insurance shall constitute a material breach of, and default under, this Contract. If Contractor shall fail to remedy such breach, Contractor will be liable for any and all costs, liabilities, damages and penalties resulting to SJRA from such breach, unless a written waiver of the specific insurance requirement(s) is provided to Contractor by SJRA. In the event of any failure by Contractor to comply with the insurance requirements of the Contract, SJRA may, without in any way compromising or waiving any right or remedy at law or in equity, on notice to Contractor, purchase such insurance, at Contractor's expense, provided that SJRA shall have no obligation to do so and if SJRA shall do so, Contractor shall not be relieved of or excused from the obligation to obtain and maintain such insurance amounts and coverages.

2.0 Conditions Affecting All Insurance Required Herein.

2.1 Cost of Insurance. All insurance coverage shall be provided at Contractor's sole expense.

2.2 Maintenance of Insurance. All insurance coverage shall be maintained in effect with limits not less than those set forth below at all times during the performance of the Work and through the correction period of paragraph 5.13 of the Agreement, and for such longer periods of time as may be set forth herein.

2.3 Status and Rating of Insurance Company. All insurance coverage shall be written through insurance companies authorized to do business in the State of Texas and rated no less than A-: VII in the most current edition of A. M. Best's Key Rating Guide.

2.4 Restrictive, Limiting, or Exclusionary Endorsements. All insurance coverage shall be provided to SJRA in compliance with the requirements herein.

2.5 Limits of Liability. The limits of liability may be provided by a single policy of insurance or by a combination of primary and umbrella policies, but in no event shall the total limits of liability available for any one occurrence or accident be less than the amount required herein.

2.6 Notice of Cancellation or Material Change in Coverage. Contractor and the insurer shall provide SJRA with thirty days prior written notice of cancellation or material change in coverage.

2.7 Waiver of Rights of Recovery and Subrogation. The Contractor hereby waives its rights of recovery from the SJRA with regard to all causes of property and/or liability loss and shall cause a waiver of subrogation endorsement to be provided in favor of SJRA on all insurance coverage carried by the Contractor, whether required herein or not.

2.8 Deductible/Retention. Except as otherwise specified herein, no insurance required herein shall contain a deductible or self-insured retention in excess of $10,000 without prior written approval of SJRA. All deductibles and/or retentions shall be paid by, assumed by, for the account of, and at Contractor's sole risk. Contractor shall not be reimbursed for same. If the insurance contains a self-insured retention, the policy shall allow the self-insured retention to be paid or satisfied by a party other than the named insured.

2.9 Minimum Limits. The inclusion of required minimum insurance limits in the Contract Documents shall not be construed as limiting the SJRA's or other additional insured's rights under any policy with higher limits. The minimum insurance limits set forth in this Exhibit D shall be deemed to be amended to any higher limits actually contained in Contractor's insurance policies.

3.0 Intentionally Omitted.

4.0 Insurance Required.

4.1 The following insurance shall be maintained in effect with limits not less than those set forth below at all times during the term of the Agreement and thereafter as required.

PLEASE NOTE: These requirements should provide general guidance only, additional requirements based on project specifics of the contract may be required. Contract amounts over limits will require excess coverage to cover the difference. Combined single limits and excess coverage must equal the Contract Amount (CA).

Risk Level TIER 1	Coverage		Contract Amount <=$25k	>$25k-$75k	>$75k-$1M	>=$1M-$2M	>$2M
Administrative/ General Business Services **Services:** Routine/regularly scheduled services such as landscaping, janitorial, or maintenance- elevators **Contract Type:** ➢ General Services Contract ➢ Standby Services Agreement	**Commercial General Liability (CGL)** (Premises/Completed Operations)	Each Occurrence	$300k	$500K	$1M	$1.5M	= $2M
		Fire Damage	$100k	$250k	$1M	$1.5M	= $2M
		Personal & ADV injury	$300k	$500k	$1M	$1.5M	= $2M
		Aggregate	$600K	$750k	$2M	$3M	= $4M
		Premises/Operations	$300k	$500k	$1M	$1.5M	=$2M
		Products/Completed Operations	$300K	$500k	$1M	$1.5M	= $2M
	Workers Compensation	Per occurrence bodily injury	$500k	$500k	$500k	$500k	$500k
		Per occurrence bodily injury by disease	$500k	$500k	$500k	$500k	$500k
		Policy Limit for Bodily Injury Disease	$500k	$500k	$500k	$500k	$500k
	Business Auto Liability Owned, Non-Owned, Hired, Injury and Property coverage for all	Bodily Injury	$250k	$500k	$500k	$1M	= $2M
		Property Damage	$100k	$500k	$500k	$1M	= $2M
		Combined Single Limit (Bodily & Property Damage)	$500k	$1M	$1M	$2M	= $2M
	Professional Liability	Professional required based on the scope of work	$250k	$500k	$1M	$2M	= $2M
	Cyber Liability	Cyber required based on the scope of work	$250k	$500k	$1M	$2M	= $2M

4.2 Commercial General Liability Insurance

4.2.1 Coverage. Such insurance shall cover liability arising out of all locations and operations of Contractor, including but not limited to liability assumed under the Contract Documents (including the tort liability of another assumed in a business contract). Defense shall be provided as an additional benefit and not included within the limit of liability.

4.2.2 Form. Commercial General Liability Occurrence form (at least as broad as an unmodified current ISO edition of CG 00 01) to include, but not be limited to, coverage for the Contractor's premises, operations (including completed operations), products, and contractual assumption of tort liability.

4.2.3 Amount of Insurance. Coverage shall be provided with limits of not less than the above stated table.

4.2.4 Required Endorsements.

a. Additional Insured. Additional insured status shall be provided in favor of the SJRA on a combination of ISO forms CG 20 10 10 01 and CG 20 37 10 01 or their combined equivalent. It is the intent of the parties to this Agreement that this Additional Insured status shall include coverage for completed operations and for the SJRA's concurrent and sole negligence. Notwithstanding the foregoing, if Subchapter C of Chapter 151 of the Texas Insurance Code applies to the Contract, this Additional Insured obligation shall not require or provide coverage the scope of which is prohibited under Subchapter C of Chapter 151 of the Texas Insurance Code for an agreement to indemnify, hold harmless or defend.

b. Designated Construction Project(s) Aggregate Limit. The aggregate limit shall apply separately to this Agreement through use of an ISO CG 25 03 05 09 endorsement or its equivalent.

c. Notice of Cancellation or Material Change in Coverage, as required in 2.6, above.

d. Primary and Non-Contributing Liability. All insurance coverage required of the Contractor shall be primary to and shall seek no contribution from all insurance available to SJRA, with SJRA's insurance being excess, secondary and non-contributing. This CGL coverage shall be endorsed to provide such primary and non-contributing liability coverage.

e. Waiver of Rights of Recovery and Subrogation, as required in 2.7, above.

4.2.5 Continuing Commercial General Liability Insurance. Contractor shall maintain such insurance in identical coverage, form and amount, including required endorsements, for at least three (3) years following Date of Final Completion of the Work to be performed under the Contract.

4.3 Auto Liability Insurance

4.3.1 Coverage. Such insurance shall cover liability arising out of any auto (including owned, hired, and non-owned).

4.3.2 Form. Business Auto form (at least as broad as an unmodified current ISO edition of CA 00 01).

4.3.3 Amount of Insurance. Coverage shall be provided with a limit of not less than the above stated table.

4.3.4 Required Endorsements.

a. Notice of Cancellation or Material Change in Coverage, as required in 2.6, above.

b. Waiver of Rights of Recovery and Subrogation, as required in 2.7, above.

c. Additional insured status in favor of the SJRA. Notwithstanding the foregoing, if Subchapter C of Chapter 151 of the Texas Insurance Code applied to the Contract, this Additional Insured obligation shall not require or provide coverage the scope of which is prohibited under Subchapter C of Chapter 151 of the Texas Insurance Code for an agreement to indemnify, hold harmless or defend.

d. Primary and Non-Contributing Liability. All insurance coverage required of the Contractor shall be primary to and shall seek no contribution from all insurance available to SJRA, with SJRA's insurance being excess, secondary and non-contributing. This Auto Liability Insurance coverage shall be endorsed to provide such primary and non-contributing liability coverage.

4.4 Workers' Compensation/Employer's Liability Insurance

4.4.1 Amounts of coverage shall be no less than Statutory Limits; each Accident and Disease (see requirements stated in table above).

4.5 Excess Liability Insurance

4.5.1 Coverage. Such insurance shall be excess over and be no less broad than all coverages described above (with the exception of Worker's Compensation) and shall include a drop-down provision.

4.5.2 Form. This policy shall have the same inception and expiration dates as the Commercial General Liability insurance required above.

4.5.3 Amount of Insurance. Coverage shall be provided with a limit of not less than the above stated table.

4.5.4 Continuing Excess Liability Insurance. Contractor shall maintain such insurance in identical coverage, form and amount, including required endorsements, for at least three (3) years following Date of Final Completion of the Work to be performed under the Contract.

4.5.5 Additional insured status shall be provided in favor of the SJRA. Notwithstanding the foregoing, if Subchapter C of Chapter 151 of the Texas Insurance Code applies to the Contract, this Additional Insured obligation shall not require or provide coverage the scope of which is prohibited under Subchapter C of Chapter 151 of the Texas Insurance Code for an agreement to indemnify, hold harmless or defend. This Excess Liability Insurance shall be primary to and shall seek no contribution from all insurance available to the SJRA, with SJRA's insurance being excess, secondary and non-contributing.

5.0 Evidence of Insurance.

5.1 Provision of Evidence. Evidence of the insurance coverage required to be maintained by Contractor, represented by certificates of insurance, evidence of insurance consistent with the requirements of Chapter 1811 of the Texas Insurance Code, and endorsements issued by the insurance company or its legal agent, must be furnished to SJRA not later than 15 days prior to commencement of Work. New certificates of insurance, evidence of insurance, and endorsements shall be provided to SJRA prior to the termination date of the current certificates of insurance, evidence of insurance, and endorsements.

5.2 Form. All liability insurance required herein shall be evidenced by ACORD form 25, "Certificate of Insurance", or if such form is not filed with and approved or deemed approved by the Texas Department of Insurance, then on a form filed with and approved by or deemed approved by the Texas Department of Insurance and acceptable to SJRA.

5.3 Specifications. Such certificates of insurance, evidence of insurance, and endorsements shall specify the following, excluding, however, any such specifications as may be prohibited under Chapter 1811 of the Texas Insurance Code:

5.3.1 SJRA as a certificate holder with correct mailing address.
5.3.2 Insured's name, which must match that on this Contract.
5.3.3 Insurance companies affording each coverage, policy number of each coverage, policy dates of each coverage, all coverages and limits described herein, and signature of authorized representative of insurance company.
5.3.4 Producer of the certificate with correct address and phone number listed.
5.3.5 Additional insured status required herein.
5.3.6 Amount of any deductibles and/or retentions.
5.3.7 Cancellation and material change in coverage notification as required by the policy or any endorsement thereto in accordance with Section 3.6 of this Exhibit D.
5.3.8 Designated Construction Project Aggregate Limits required herein.
5.3.9 Primary and non-contributing status required herein.
5.3.10 Waivers of subrogation required herein.

5.4 Required Endorsements. A copy of the Commercial General Liability additional insured, waiver of subrogation and primary/noncontributing endorsement(s) or policy language shall also be provided.

5.5 Failure to Obtain. Failure of SJRA to demand such certificate or other evidence of full compliance with these insurance requirements or failure of SJRA to identify a deficiency from evidence that is provided shall not be construed as a waiver of Contractor's obligation to maintain such insurance.

5.6 Copies. Upon request of SJRA, Contractor shall provide to SJRA a copy of all insurance policies required herein within ten (10) days of any such request. Renewal policies, if necessary, shall be delivered to SJRA at least ten (10) days prior to the expiration of the previous policy.

5.7 Commencement of Work. Commencement of Work without provision of the required certificate of insurance, evidence of insurance and/or required endorsements, or without compliance with any other provision of this Contract, shall not constitute a waiver by SJRA of any rights of SJRA. SJRA shall have the right, but not the obligation, of prohibiting Contractor or any subcontractor from performing any Work until such certificate of insurance, evidence of insurance and/or required endorsements are received and approved by SJRA.

6.0 Intentionally Omitted.

7.0 Insurance Requirements of Contractor's Subcontractors and for Contractor's Property and Equipment.

7.1 Insurance similar to that required of Contractor shall be provided by all subcontractors and sub-subcontractors (or provided by Contractor on behalf of subcontractors or sub-subcontractors) to cover operations performed under any subcontract agreement. Limits of subcontractors' coverage shall be per Contractor's standard requirements. Contractor shall be held responsible for any modification in these insurance requirements as they apply to subcontractors and sub-subcontractors. Contractor shall maintain certificates of insurance from all subcontractors and sub-subcontractors containing provisions similar to those listed herein (modified to recognize that the certificate is from a subcontractor or sub-subcontractor) enumerating, among other things, the waivers of subrogation, additional insured status, and primary liability as required herein, and make them available to SJRA upon request. Subcontractor's Commercial General Liability insurance policies shall name the SJRA as an additional insured.

7.2 Contractor is fully responsible for loss and damage to its property on the site, including tools and equipment, and shall take necessary precautions to prevent vandalism, theft, burglary, pilferage and unexplained disappearance of property. Any insurance covering Contractor's or its subcontractor's property shall be Contractor's and its subcontractor's sole and complete means or recovery for any such loss. To the extent any loss is not covered by said insurance or subject to any deductible or co-insurance, Contractor shall not be reimbursed for same. Should Contractor or its subcontractors choose to self-insure this risk, it is expressly agreed that Contractor hereby waives, and shall cause its subcontractors to waive, any claim for damage or loss to said property in favor of SJRA.

8.0 Release and Waiver.

Contractor hereby releases, and shall cause its subcontractors and sub-subcontractors to release, SJRA from any and all claims or causes of action whatsoever which Contractor and/or its subcontractors or sub-subcontractors might otherwise now or hereafter possess resulting in or from or in any way connected with any loss covered by insurance, whether required herein or not, or which should have been covered by insurance required herein, including the deductible and/or uninsured portion thereof, maintained and/or required to be maintained by Contractor and/or its subcontractors and sub-subcontractors pursuant to this Contract. Contractor shall be responsible for any Builder's Risk deductible applicable to the Work. Contractor waives all damages and rights of recovery against the SJRA and SJRA's separate contractors for damages caused by fire or other causes of loss to the extent covered by any Builder's Risk property insurance applicable to the Contractor's work under the Contract, except such rights as Contractor may have to proceeds of such insurance as Contractor's interest may appear.

EXHIBIT C
CONTRACTOR'S CERTIFICATE OF INSURANCE

EXHIBIT D
BOND FORMS

Performance Bond
Payment Bond

PERFORMANCE BOND

STATE OF TEXAS

COUNTY OF _____

KNOW ALL MEN BY THESE PRESENTS: That _____ _____(Contractor) of the City of _____, County of _____, and State of Texas, as Principal, and _____ authorized under the Laws of the State of Texas to act as surety on bonds for principals, as Surety, are held and firmly bound unto San Jacinto River Authority (Owner), in the penal sum of _____ Dollars ($_____) for the payment whereof, the said Principal and Surety bind themselves, and their heirs, administrators, executors, successors and assigns, jointly and severally, by these presents:

WHEREAS, the Principal has entered into a certain written contract with the Owner, dated the _____ day of _____, 20___, for construction of: _____ _____(the "Contract"),which Contract is hereby referred to and made a part hereof as fully and to the same extent as if copied at length herein.

NOW, THEREFORE, THE CONDITION OF THIS OBLIGATION IS SUCH, that if the said Principal shall faithfully perform said Contract and shall in all respects duly and faithfully observe and perform all and singular the covenants, conditions and agreements in and by said Contract agreed and covenanted by the Principal to be observed and performed, within the time provided therein and any extensions thereof that may be granted by the Owner, and during the life of any guarantees or warranties contained in or required under said Contract, and shall also well and truly perform all the undertakings, covenants, terms, conditions and agreements of any and all modifications of said Contract that may hereafter be made, then this obligation shall be void; otherwise to remain in full force and effect;

PROVIDED, HOWEVER, that this bond is executed pursuant to the provisions of Chapter 2253 of the Texas Government Code as amended and all liabilities on this bond shall be determined in accordance with the provisions of said statute to the same extent as if it were copied at length herein.

Surety, for value received, stipulates and agrees that no change, extension of time, alteration or addition to the terms of the Contract, or to work performed thereunder, or the plans, specifications, or drawings, accompanying the same, shall in anyway affect its obligation on this bond, and it does hereby waive notice of any such change, extension of time, alteration or addition to the terms of the Contract, or the work to be performed thereunder.

IN WITNESS WHEREOF, the said Principal and Surety have signed and sealed this instrument on the _____ day of _____, 20__.

_____	_____
Principal	Surety
BY:_____	BY:_____
TITLE:_____	TITLE:_____
ADDRESS:	PHYSICAL ADDRESS:
_____	_____

_____

_____

MAILING ADDRESS FOR NOTICE OF CLAIMS:

_____

_____

_____

TELEPHONE:_____

LOCAL RECORDING AGENT
PERSONAL IDENTIFICATION NUMBER:

_____

The name and address of the Resident Agent of Surety is:

_____

_____

_____

_____

STATUTORY PAYMENT BOND

STATE OF TEXAS

COUNTY OF _____

KNOW ALL MEN BY THESE PRESENTS: That _____
_____
(Contractor) of the City of _____, County of _____, and State of Texas, as Principal, and _____
authorized under the Laws of the State of Texas to act as surety on bonds for principals, as Surety, are held and firmly bound unto San Jacinto River Authority (Owner), in the penal sum of _____ Dollars ($_____) for the payment whereof, the said Principal and Surety bind themselves, and their heirs, administrators, executors, successors and assigns, jointly and severally, by these presents:

WHEREAS, the Principal has entered into a certain written contract with the Owner, dated the _____ day of _____, 20___ for construction of: _____
_____(the "Contract"), which Contract is hereby referred to and make a part hereof as fully and to the same extent as if copied at length herein.

NOW, THEREFORE, THE CONDITIONS OF THIS OBLIGATION IS SUCH, that if the said Principal shall pay all claimants supplying labor and material to him or a Sub-Contractor in the prosecution of the work provided for in said Contract, then, this obligation shall be void; otherwise to remain in full force and effect;

PROVIDED, HOWEVER, That this bond is executed pursuant to the provisions of Chapter 2253 of the Texas Government Code as amended and all liabilities on this bond shall be determined in accordance with the provisions of said statute to the same extent as if it were copied at length herein.

Surety, for value received, stipulates and agrees that no change, extension of time, alteration or addition to the terms of the Contract, or to work performed thereunder, or the plans, specifications, or drawings, accompanying the same, shall in anyway affect its obligation on this bond, and it does hereby waive notice of any such change, extension of time, alteration or addition to the terms of the Contract, or the work to be performed thereunder.

IN WITNESS WHEREOF, the said Principal and Surety have signed and sealed this instrument on the _____ day of _____, 20__.

_____	_____
Principal	Surety
BY:_____	BY:_____
TITLE:_____	TITLE:_____
ADDRESS:	PHYSICAL ADDRESS:
_____	_____
_____	_____
	MAILING ADDRESS FOR NOTICE OF CLAIMS:

_____

_____

_____

TELEPHONE:_____

LOCAL RECORDING AGENT
PERSONAL IDENTIFICATION NUMBER:

_____

The name and address of the Resident Agent of Surety is:

_____

_____

_____

_____

4828-1341-3979, v. 1

EXHIBIT E
TECHNICAL SPECIFICATIONS AND DRAWINGS
(these may be provided in separate attachments)

SJRA
SAN JACINTO RIVER AUTHORITY

Board Communication

Item No.	Agenda Item	Date
6.4	Consider authorizing the General Manager to execute the second renewal term of a General Services Agreement with Whitener Enterprises to continue providing fuels, oils, and lubricants for all SJRA Divisions.	**10/22/2026**

BACKGROUND INFORMATION

Firm Name:	Whitener Enterprises
Type of Agreement:	Second Renewal - General Services Agreement
Service:	Fuels, Oils and Lubricants
Contract Number:	24-0043-A
Initial Contract Term Amount:	$245,211.02 (December 1, 2024 – November 30, 2025)
First Renewal Term Amount:	$204,360.15 (December 1, 2025 – November 30, 2026)
Second Renewal Term Not-to-Exceed Amount:	$250,000.00 (December 1, 2026 – November 30, 2027)

The San Jacinto River Authority (SJRA) requires fuel, oil, and lubricant (FOL) services to support the ongoing operation and maintenance of its vehicles, equipment, facilities, and other operational assets. These services include the provision and delivery of fuels, oils, lubricants, and related products necessary to maintain SJRA's fleet and equipment used in the daily operations of the Authority.

Maintaining a reliable and consistent supply of these products is essential to ensure vehicles and equipment remain properly fueled, lubricated, and maintained for safe and dependable operation. These services help prevent operational interruptions, reduce equipment downtime, and support the continued and efficient delivery of SJRA services.

The services are necessary to meet SJRA's ongoing operational needs and ensure fuel, oil, and lubricant products are readily available when required. Continued access to these services supports equipment reliability, operational efficiency, and overall business continuity.

FUNDING SOURCE: Operating Budget

ATTACHMENTS: Renewal Letter

RECOMMENDED ACTION

Authorize the General Manager to execute the second renewal term of a General Services Agreement with Whitener Enterprises, in an amount not to exceed $250,000, to continue providing fuel, oil, and lubricant services for all SJRA Divisions. Sufficient funds were budgeted and are available in Fiscal Year 2027 for this purpose.

SJRA
SAN JACINTO RIVER AUTHORITY

August 25, 2026

Whitener Enterprises
1296 FM 3083 Rd.
Conroe, TX 77301

Re: **Contract No. 24-0043-A: Fuels, Oils, and Lubricants**

To whom it may concern,

The above-referenced contract was originally executed with an effective date of **December 1, 2024**, for an initial one-year term, with the option for two (2) additional one-year renewal terms. The San Jacinto River Authority (SJRA) intends to exercise its option to renew the agreement for Renewal Term **2** leaving **zero (0)** remaining renewal terms. Pursuant to Article 2.1 of Contract No. **24-0043-A** all renewals must be in writing and executed by both parties.

The contract terms are as follows:

- ~~Initial Term: December 1, 2024 – November 30, 2025~~
- ~~Renewal Term 1: December 1, 2025 – November 30, 2026~~
- **Renewal Term 2: December 1, 2026 – November 30, 2027**

The maximum not-to-exceed compensation payable to **Whitener Enterprises**, under this agreement within Renewal Term **3**, is **$250,000**.

If your company agrees to renew the contract for Renewal Term **2** with the stated not-to-exceed, please sign below and return the executed document via email to **Megan Morris** at **mmorris@sjra.net**.

Sincerely,

Megan Morris

Megan Morris
Buyer

Whitener Enterprises Approval:
We agree to renew Contract **24-0043-A** for one (1) additional year.

Name: Brian Mauck Title: Vice President

Signature: Date: 09/16/2026

SJRA Approval:
Approved for renewal of Contract **24-0043-A** for one (1) additional year.

Name: Aubrey A. Spear, P.E. Title: General Manager

Signature: Date:

EXHIBIT A
CONTRACTOR'S PROPOSAL

General	Fuel	Price	
Lake Conroe <6000	Unleaded		
OPIS Index Low Rack		$	1.8720
Profit/Overhead		$	0.2500
Total Cost/Gallon		$	2.1220
Lake Conroe >6000	Unleaded		
OPIS Index Low Rack		$	1.8720
Profit/Overhead		$	0.0995
Total Cost/Gallon		$	1.9715
Lake Conroe <6000	Dyed Diesel		
OPIS Index Low Rack		$	2.1816
Profit/Overhead		$	0.0995
Total Cost/Gallon		$	2.2811
Woodlands <6000	Unleaded		
OPIS Index Low Rack		$	1.8720
Profit/Overhead		$	0.2500
Total Cost/Gallon		$	2.1220
Woodlands >6000	Unleaded		
OPIS Index Low Rack		$	1.8720
Profit/Overhead		$	0.0995
Total Cost/Gallon		$	1.9715
Woodlands <6000	LS Diesel		
OPIS Index Low Rack		$	2.1776
Profit/Overhead		$	0.2500
Total Cost/Gallon		$	2.4276
Woodlands >6000	LS Diesel		
OPIS Index Low Rack		$	2.1776
Profit/Overhead		$	0.0995
Total Cost/Gallon		$	2.2771
Woodlands <6000	Dyed Diesel		
OPIS Index Low Rack		$	2.1816
Profit/Overhead		$	0.2500
Total Cost/Gallon		$	2.4316
Highlands <6000	Unleaded		
OPIS Index Low Rack		$	1.8720
Profit/Overhead		$	0.2500
Total Cost/Gallon		$	2.1220

Highlands >6000	Unleaded		
OPIS Index Low Rack		$	1.8720
Profit/Overhead		$	0.2500
Total Cost/Gallon		$	2.1220
Highlands <6000	Dyed Diesel		
OPIS Index Low Rack		$	2.1816
Profit/Overhead		$	0.2500
Total Cost/Gallon		$	2.4316
Highlands >6000	Dyed Diesel		
OPIS Index Low Rack		$	2.1816
Profit/Overhead		$	0.0995
Total Cost/Gallon		$	2.2811
GRP <6000	Unleaded		
OPIS Index Low Rack		$	1.8720
Profit/Overhead		$	0.2500
Total Cost/Gallon		$	2.1220
GRP >6000	Unleaded		
OPIS Index Low Rack		$	1.8720
Profit/Overhead		$	0.0995
Total Cost/Gallon		$	1.9715
GRP <6000	LS Diesel		
OPIS Index Low Rack		$	2.1776
Profit/Overhead		$	0.2500
Total Cost/Gallon		$	2.4276
GRP >6000	LS Diesel		
OPIS Index Low Rack		$	2.1776
Profit/Overhead		$	0.0995
Total Cost/Gallon		$	2.2771
GRP <6000	Dyed Diesel		
OPIS Index Low Rack		$	2.1816
Profit/Overhead		$	0.2500
Total Cost/Gallon		$	2.4316
Years in Business		61	
Metered Trucks		Yes	
Insurance		Yes	

SJRA
SAN JACINTO RIVER AUTHORITY

Board Communication

Item No.	Agenda Item	Date
6.5	Consider authorizing the General Manager to approve purchases with CedarChem, LLC, for coagulants for the GRP Division.	**10/22/2026**

BACKGROUND INFORMATION

Firm Name: CedarChem, LLC

Type of Agreement: Sole Source

Service: Coagulants

Contract Number: Sole Source

Anticipated NTE Expenditures: GRP - $740,000.00

Coagulants are used during the initial stage of surface water treatment at the GRP Division. A coagulant is a chemical that promotes the aggregation of small, suspended particles that are too light to readily settle into larger, heavier particles that can be more effectively removed through the treatment process. This process, and the proper selection and application of coagulants, are critical to GRP's membrane operations, as they aid in removing suspended particles from the raw water prior to membrane filtration.

The GRP Division's core business is the treatment and distribution of safe and reliable drinking water to its participants. To accomplish this, staff utilizes a variety of treatment chemicals to support processes including pre-oxidation of organic compounds, flocculation and removal of suspended solids, removal of organics, and disinfection. Maintaining a reliable supply of high-quality treatment chemicals is essential to the continued operation and performance of the GRP Surface Water Treatment Facility.

Two chemicals used in the facility's pretreatment process are CedarChem's CedarCLEAR 1757 and CedarCLEAR 1757 Expac-1. These products are used in combination to optimize treatment performance within the plate settling chambers. Their use results in lower turbidity loading to the PAL Membrane Trains, supporting a more effective membrane filtration process, and reducing the potential for fouling.

During design and construction of the GRP Surface Water Treatment Facility, CedarChem products were selected for use in this treatment process. During subsequent testing and evaluation of alternative products commonly used for similar applications, other chemical products did not perform adequately with the raw water chemistry of Lake Conroe. Testing indicated that the alternative products contributed to fouling and short-circuiting within the plate settling chambers. Based on these results, CedarChem products were determined to be compatible with the facility's treatment process and current membrane technology.

The CedarCLEAR products are proprietary formulations manufactured by CedarChem and are only available for purchase directly through CedarChem.

FUNDING SOURCE: FY27 GRP Operating Budget

ATTACHMENTS: Sole Source Memo and Proposal

RECOMMENDED ACTION

Authorize the General Manager to approve the purchase of coagulants with CedarChem, LLC, in an amount not to exceed $740,000, for the GRP Division. Sufficient funds were budgeted and are available in Fiscal Year 2027 for this purpose.

SJRA
SAN JACINTO RIVER AUTHORITY

SINGLE/SOLE SOURCE JUSTIFICATION

This form must be completed and approved before initiating a non-competitive purchase from a single or sole source vendor. A *single source* purchase occurs when multiple suppliers may exist, but a specific vendor is chosen for documented reasons. A *sole source* purchase occurs when only one vendor is capable of providing the required goods or services due to unique qualifications, compatibility, proprietary rights, or other justifiable reasons.

Date of Request: 09/16/2026 Requestor: Jason Williams Department/Division: GRP

Contact Phone: 281-367-9511 Contact E-Mail: Jwilliams@sjra.net

VENDOR/PURCHASE INFORMATION:

Vendor Name: CedarChem, LLC. Amount of Purchase: $1,400,000.00

Product/Service Being Purchased: Proprietary blend of surface water treatment chemicals - coagulants

REASON:

- [x] One known source can provide the commodity or service
- [x] Unique source (commodity or service is unique or special in nature)
- [ ] Compatibility (compatibility with existing equipment/systems required)
- [ ] Sales territory or product availability is limited within geographical boundaries
- [x] Limited or proprietary systems (additional licenses, updates, specialized replacement parts, etc.)
- [ ] Personal or professional services with specialized knowledge, expertise, skill or education
- [ ] Security/Surveillance (components/systems to prevent terrorists, criminal acts/incidents or acts of war)
- [ ] Other: _____

COMMENTS/JUSTIFICATION:

After a trial period with other products that are historically used in this type of process, It was found that other chemicals did not react with Lake Conroe's raw water chemistry and created fouling and short-circuiting at the plate settlers. It was determined that CedarChem and their products was the best fit for GRPs current technology.

CedarChem is proprietary in nature accessible only through them for purchase. At this time, the market does not have an equal. Back-up documentation is provided as part of this justification. Based on the information stated above, I am requesting that SJRA GRP Division approve CedarChem for process control measures at the Surface Water Treatment Facility.

Preliminary Approvals (please check the box and print your name, you can initial next to it if you prefer):

[X] Department Manager Name: _____ Date: 9.17.26

[X] Division Manager Name: Chris Meeks Date: 9.18.26

[X] Procurement Manager Name: _____ Date: 9/21/2026

[X] Senior Manager Name: SAMIR S. → APPROVED VIA 9/28 EMAIL Date: 9/28/26

Final Approval (required if over $25,000):

General Manager Name: Aubrey A. Spear Date: 09/28/2026

General Manager Signature: Aubrey A. Spear

SAN JACINTO RIVER AUTHORITY

CEDARCHEM®
105 Plantation Ave, Cedartown, GA 30125 (770) 748-3863

September 16, 2026

San Jacinto River Authority
Attn: Ron McCullough
11998 Pine Valley Dr.
Conroe, TX 77304

Re: New pricing for the CedarCLEAR®1757 Expac-1 and the CedarCLEAR®1757 for contract period between 10-1-2026 and 9-30-2027.

Dear Ron,

We strongly value our partnership with SJRA and have secured firm supply and firm pricing for the upcoming contract period, we will provide specialty coagulants at the following costs:

CedarCLEAR®1757 EXPAC 1:	**$0.57 per pound delivered**
CedarCLEAR®1757:	**$0.34 per pound delivered**

Estimated annual cost based on 21.14MGD

CedarCLEAR®1757 EXPAC 1:	**$652,112.26**
CedarCLEAR®1757:	**$137,700.00**

These costs are **firm for the entire contract period between October 1, 2026 through September 30, 2027.** We appreciate the partnership we have with SJRA to provide chemistry and technical support to enable both of us to provide the highest water quality. If you have any questions, please let us know. We thank you for your time and for your business.

Sincerely,

AdriennneHess

Business Support Analyst
CedarChem, LLC

CC: Peyton Smith

CEDARCHEM®
105 Plantation Ave, Cedartown, GA 30125 (770) 748-3863

September 16, 2026

San Jacinto River Authority
Attn: Ron McCullough
11998 Pine Valley Dr.
Conroe, TX 77304

Re: New pricing for the CedarCLEAR®1757 Expac-1 and the CedarCLEAR®1757 for contract period between 10-1-2026 and 9-30-2027.

Dear Ron,

We strongly value our partnership with SJRA and have secured firm supply and firm pricing for the upcoming contract period, we will provide specialty coagulants at the following costs:

CedarCLEAR®1757 EXPAC 1:	**$0.57 per pound delivered**
CedarCLEAR®1757:	**$0.34 per pound delivered**

Estimated annual cost based on 21.14MGD

CedarCLEAR®1757 EXPAC 1:	**$652,112.26**
CedarCLEAR®1757:	**$137,700.00**

These costs are **firm for the entire contract period between October 1, 2026 through September 30, 2027.** We appreciate the partnership we have with SJRA to provide chemistry and technical support to enable both of us to provide the highest water quality. If you have any questions, please let us know. We thank you for your time and for your business.

Sincerely,

AdrienneHess

Business Support Analyst
CedarChem, LLC

CC: Peyton Smith

SJRA
SAN JACINTO RIVER AUTHORITY

Board Communication

Item No.	Agenda Item	Date
6.6	Consider authorizing the General Manager to execute a General Services Agreement with Carbon Activated Corporation for granulated activated carbon exchange services for the GRP Division.	**10/22/2026**

BACKGROUND INFORMATION

Firm Name:	Carbon Activated Corporation (CAC)
Type of Agreement:	General Services Agreement
Service:	Granulated Activated Carbon (GAC)
Contract Number:	27-0020
FY26 Expenditures:	$2,526,096
FY27 NTE Amount:	$2,750,000

The GRP Division's Surface Water Treatment Facility utilizes Granulated Activated Carbon (GAC) as an important component of the surface water treatment process. GAC provides an additional treatment barrier by adsorbing dissolved organic compounds and other constituents that may contribute to taste, odor, and color in finished water.

The use of GAC complements the facility's membrane treatment processes and enhances overall finished water quality. This additional treatment step supports the GRP Division's commitment to providing high-quality, reliable surface water to GRP customers.

As authorized by Texas law, the SJRA intends to utilize a cooperative purchasing agreement with the City of Tucson as its procurement method for contracting with Carbon Activated Corporation (CAC) for the requested services.

Staff requests approval of the purchase of granulated activated carbon from Carbon Activated Corporation for use at the GRP Surface Water Treatment Facility.

FUNDING SOURCE: FY27 GRP Operating Budget

ATTACHMENTS: General Services Agreement

RECOMMENDED ACTION

Authorize the General Manager to execute a General Services Agreement with Carbon Activated Corporation for granulated activated carbon exchange services in the not to exceed amount of $2,750,000 for the GRP Division. Sufficient funds were budgeted and are available in Fiscal Year 2027 for this purpose.

SAN JACINTO RIVER AUTHORITY

STANDARD FORM OF AGREEMENT

GENERAL SERVICES

CONTRACT # 27-0020

GRANULAR ACTIVATED CARBON (EXCHANGE SERVICES) WITH CARBON ACTIVATED CORPORATION

GENERAL SERVICES AGREEMENT
Contract #27-0020

Project: Installation of Granular Activated Carbon (GAC) Exchange Services

Project Location: GRP Division

THE PARTIES

The SJRA: The SAN JACINTO RIVER AUTHORITY

- *GRP Division – 11998 Pine Valley Dr. Conroe, TX 77304*

Contact Person: Kim Robbins, Senior Buyer: 936-588-7118; krobbins@sjra.net

and

Contractor: Carbon Activated Corporation

(Address for Written Notice) 1527 75th Street, Houston, TX 77011

Contact Person: Shami Fernando, Manager, Houston Branch – Direct Telephone: 281-846-6702; Cell: 716-348-4306; shamindrie@activatedcarbon.com

The SJRA and the Contractor may be referred to herein individually as a "Party" and together as the "Parties".

FOR THE MUTUAL PROMISES SET OUT HEREIN THE PARTIES AGREE AS FOLLOWS:

ARTICLE 1
WORK OF THE CONTRACT

1.1 Contractor shall perform the Work and provide the Goods in accordance with the terms of this Agreement and any and all Exhibits attached hereto and the documents enumerated in Paragraph 7.1 below, all of which documents are incorporated herein (collectively the "Contract Documents"). Contractor shall provide all labor, materials, equipment, services, supervision, tools, facilities, utilities, and other items necessary for the proper and timely performance and completion of the following generally described work (herein the "Work") and supply of the following generally described goods (herein the "Goods"), in strict accordance with the terms of the Contract Documents and as reasonably inferable from the Contract Documents as necessary for such Work to be complete and serviceable and such Goods to be fully and finally supplied:

- *Granular Activated Carbon (GAC) Exchange Services - In accordance with Texas Local Government Code Chapter 271, SJRA will procure Remediation System Activated Carbon from Carbon Activated Corporation through the City of Tucson Contract #212755 utilizing cooperative purchasing authority. City of Tucson Contract #212755 is attached and hereto incorporated as Exhibit A.*

1.2 Changes in the Work and changes with respect to the supply of the Goods may be accomplished after execution of this Agreement, and without invalidating this Agreement, by Amendment. A "Amendment" is a written instrument prepared by SJRA and signed by SJRA and Contractor, stating their agreement upon all of the following: (1) the change in the Work; (2) the amount of the adjustment, if any, in the Contract Price; and (3) the extent of the adjustment, if any, in the Contract Time. All changes in the Work shall be performed under applicable provisions of the Contract Documents, and the Contractor shall proceed promptly, unless

otherwise provided in the Amendment. A field directive or field order, or any other order, direction, instruction, clarification, information or request by SJRA or any of its consultants, or any other representative of SJRA, shall not be recognized as having any effect upon the Contract Price or the Contract Time, unless documented as an Amendment, and Contractor shall not have any claim for adjustment of the Contract Price or the Contract Time as a result thereof, unless Contractor shall, prior to complying therewith and in no event later than five (5) days from the date such directive, order, etc. was given, submit a written claim therefor.

1.3 Contractor shall obtain and pay for all construction permits, licenses and fees (as legally required) for prosecution of the Work and supply of the Goods, except as otherwise provided in the Contract Documents.

ARTICLE 2
PERIOD OF SERVICE

2.1 This Agreement shall become effective upon execution of this Agreement by SJRA and the Contractor, and shall remain in effect for the term of the City of Tucson's agreement. Any renewal must be in writing and executed by both the Parties. At the sole option of SJRA, the Agreement may be further extended as an emergency extension, on a month-to-month basis. The Work to be undertaken and/or the supply of Goods pursuant to this Agreement will be required to commence within fourteen (14) days of delivery of a notice to proceed, or issuance of a SJRA Purchase Order. Time is of the essence in this agreement. The Contractor shall make all reasonable efforts to complete the Work and the supply of the Goods as expeditiously as possible and to meet the schedule established by the Parties. The Work and the supply of the Goods shall be accomplished per the scope of services as identified in the Contract Documents

ARTICLE 3
CONTRACT PRICE

3.1 The maximum, not-to-exceed compensation payable to Contractor under this Contract within the initial year, is $2,750,000. SJRA will not pay Contractor any amount in excess of the not-to-exceed compensation of this Contract for completing the Work and will not pay for Work performed before the date this Contract becomes effective or after the termination of this Contract. If the maximum compensation is increased by amendment of this Contract, the amendment must be fully effective before Contractor performs Work subject to the amendment.

The SJRA will pay Contractor in current funds for Contractor's completion of the Work and supply of the Goods, in accordance with the Contract Documents, the Contract Price as follows:

[X] Unit prices for actual quantities of Work performed, based upon **Exhibit A,** and delivery tickets, field measurements, or other documentation acceptable to SJRA as satisfactory evidence of actual quantities of Work performed.

The unit prices are based upon the estimated quantities. If quantities of Work actually performed are less or more than the quantities anticipated by twenty percent (20%) or more, whether as a result of inaccurate estimated quantities or changes in the Work requested by SJRA, and if as a result of any such reduction in quantity Contractor demonstrates to SJRA's satisfaction that Contractor is unable to recover its fixed costs of the Work, or if as a result of any such increase in quantity Contractor's costs of the Work are reduced by subcontractor or supplier rate or price reductions or discounts, economies of scale, or otherwise, the applicable unit prices shall be equitably adjusted by Amendment.

3.2 Contractor shall pay only, and Contractor warrants and represents that the Contract Price includes only, those sales, consumer, use and other similar taxes required to be paid by Contractor in accordance with the laws and regulations of the State of Texas in the performance of this public works contract. SJRA is a

political subdivision of the State of Texas and exempt from the payment of state and local sales, use and excise taxes.

3.3 Non-Appropriation: All funds for payment by SJRA under this Agreement are subject to the availability of an annual appropriation for this purpose by SJRA. In the event of non-appropriation of funds by the Board of Directors of SJRA for the services provided under the Agreement, SJRA will terminate the Agreement, without termination charge or other liability, on the last day of the then-current fiscal year or when the appropriation made for the then-current year for the services covered by this Agreement is spent, whichever event occurs first (the "Non-Appropriation Date"). If at any time funds are not appropriated for the continuance of this Agreement, cancellation shall be accepted by the Contractor on thirty (30) days prior written notice, but failure to give such notice shall be of no effect and SJRA shall not be obligated under this Agreement beyond the Non-Appropriation Date.

ARTICLE 4
PAYMENT PROCEDURES

4.1 Contractor shall submit no more than one (1) invoice per month, in a form acceptable to SJRA and including supporting documentation requested by SJRA, requesting payment for Work performed in accordance with the requirements of the Contract Documents during the prior month. The SJRA will make payments in compliance with the Texas "prompt payment law" which provides that payments owed by SJRA for the Goods and Work are due no later than 45 days after the Goods are received by SJRA, the Work is completed, or an invoice for the Goods or Work is received, whichever is later, unless there is a bona fide dispute between SJRA and Contractor about the Goods delivered or the Work performed that causes the payment to be late, or the terms of a federal contract, grant, regulation, or statute prevent SJRA from making a timely payment with federal funds, or the invoice is not mailed to the person to whom it is addressed in strict accordance with any instruction on the Purchase Order relating to the payment. (Ref Chapter 2251 of Texas Gov. Code). SJRA shall notify Contractor in writing of a disputed amount in an invoice within twenty-one (21) days of receipt. Such notice shall include a detailed statement of the amount of the invoice which is disputed.

Unless otherwise requested by SJRA, invoices shall be (a) delivered electronically to ap@sjra.net, and (b) rendered separately for each Purchase Order and not cover more than one Purchase Order. All invoices must be itemized. Invoices must be fully documented as to labor materials, and equipment provided.

Each invoice shall include:

- Contractor's name, address and telephone number
- An invoice date and number
- SJRA Purchase Order number
- Contract number
- Description of Work
- Service and Unit Prices
- Scheduled or Unscheduled Work
- Line-Item Totals
- Total Cost
- Contractor's "remit to" address

Each invoice line should include:

- A full description of the material/service provided
- Service quantities delivered, unit prices
- Date(s) of services/delivery
- If the Order has multiple lines, the invoice lines should specify the Order line being charged

Complete and accurate information is required for timely payment. SJRA will, within twenty-one (21) calendar days after receipt of each invoice, accept and process such invoice for payment, or return the invoice to Contractor indicating SJRA's reasons for refusing to issue payment. If an invoice contains errors or fails to include required information, a corrected invoice should be submitted, and payment delays will be incurred. The payment terms commence with performance of Work and/or the delivery of conforming Goods and the receipt of a correct invoice.

4.2 SJRA may withhold or nullify the whole or part of any payment to such extent as may be necessary, but in no event greater than 110% of the disputed amount, on account of:

(a) defective Work not remedied;
(b) third party claims filed or reasonable evidence indicating probable filing of such claims;
(c) failure of Contractor to make timely or properly payments to subcontractors or for labor, materials or equipment;
(d) reasonable evidence that the Work cannot be completed for the unpaid balance of the Contract Price;
(e) damage to SJRA or another contractor for which Contractor is responsible;
(f) reasonable evidence that the Work will not be completed within the Contract Time, and that the unpaid balance would not be adequate to cover actual or liquidated damages or economic disincentives for the anticipated delay;
(g) failure of Contractor to submit or update a schedule of values, submittal schedule, or construction project schedule in accordance with the Contract Documents;
(h) failure of Contractor to maintain a record of changes on drawings and documents;
(i) failure of Contractor to maintain weekly payroll reports and, as applicable, provide copies of reports in a timely manner upon request of Owner;
(j) Contractor's neglect or unsatisfactory prosecution of the Work, including failure to clean up;
(k) property damage claims that are the responsibility of the Contractor; or
(l) failure of Contractor to comply with any provision of the Contract Documents.

Any failure by SJRA to exercise its right to withhold all or any part of payment requested in any invoice as provided in this Paragraph 4.2 shall not be and shall not be construed as (i) a waiver of SJRA's right to do so in the future, or (ii) evidence that any of the circumstances identified in Subparagraphs 4.2(a) through (l) above have not occurred. When the above reasons for withholding payment are remedied or no longer exist, Contractor shall resubmit an invoice for the withheld amounts. Payment will be made within forty-five (45) calendar days of receipt by SJRA of an approved invoice.

4.3 For purposes of this Agreement, "Final Completion" shall be the point in time when SJRA determines that all Work has been completed and the Agreement fully performed except for those obligations that survive final payment. Upon written notice from Contractor that the entire Work is complete, SJRA will make a final inspection with Contractor and provide written notice of all particulars in which this inspection reveals that the Work is incomplete or defective. Contractor shall immediately take such measures as are necessary to complete such Work or remedy such deficiencies. SJRA, other third-party consultants, and any other governmental entity or public authority with jurisdiction over the project may assist SJRA in the inspection and testing of the Work and Contractor agrees to and shall cooperate with any such consultants or authorities with respect to any such inspections and tests. If, on the basis of observation of the Work during construction, final inspection, and review of the final invoice and accompanying documentation as required by the Contract Documents, SJRA is satisfied that the Work has been completed and Contractor's other obligations under the Contract Documents have been fulfilled and there are no outstanding claims, SJRA will pay to Contractor the balance due Contractor under the terms of the Contract. Owner will issue a certificate of Final Completion to Contractor which establishes the Final Completion date. Final payment, constituting the entire unpaid balance of the Contract Price, will be made by the SJRA to Contractor after final completion and acceptance of the Work by the SJRA, and Contractor's execution and delivery to SJRA of the Affidavit of Bills Paid and Waiver

and Release. The making and acceptance of final payment will constitute a waiver of all claims by Contractor against SJRA other than those previously made in writing and still unsettled at the time of the final payment.

ARTICLE 5
CONTRACTOR OBLIGATIONS AND REPRESENTATIONS

5.1 Contractor has examined and carefully studied the Contract Documents and other related data identified within the agreement for the Work and supply of the Goods.

5.2 Contractor has visited the site of the Work and become familiar with and is satisfied as to general, local, and site conditions that may affect cost, progress, and performance of the Work. Contractor has attended any mandatory pre-submittal conference or site visit required by SJRA and had the opportunity to ask any questions of SJRA relevant to Contractor's performance and completion of the Work and supply of the Goods.

5.3 Contractor is familiar with and is satisfied as to all federal, state, and local laws and regulations that may affect cost, progress, and performance of the Work and supply of the Goods.

5.4 Contractor has carefully studied all: (1) reports of explorations and tests of subsurface conditions at or contiguous to the site of the Work and all drawings of physical conditions in or relating to existing surface or subsurface structures at or contiguous to the site which have been identified in Contract Documents or made available to Contractor by SJRA, and (2) reports and drawings of hazardous environmental conditions, if any, at the site of the Work which have been identified in the Contract Documents.

5.5 Contractor has obtained and carefully studied (or assumes responsibility for having done so) all additional or supplementary examinations, investigations, explorations, tests, studies, and data concerning conditions (surface and subsurface) at or contiguous to the site which may affect cost, progress, or performance of the Work or which relate to any aspect of the means, methods, techniques, sequences, and procedures of construction to be employed by Contractor, including applying specific means, methods, techniques, sequences, and procedures of construction, if any, expressly required by the Contract Documents to be employed by Contractor, and safety precautions and programs incident thereto.

5.6 Contractor does not consider that any further examinations, investigations, explorations, tests, studies, or data are necessary for performance of the Work or supply of the Goods, at Contract Price, within Contract Time, and in accordance with the Contract Documents.

5.7 Contractor is aware of the general nature of any on-going operations and/or work to be performed by the SJRA and others at the site of the Work, and Contractor shall perform the Work and supply of the Goods, in such manner as to minimize any impact on any on-going operations and/or work to be performed by the SJRA and others at the site of the Work, and Contractor shall cooperate with SJRA and others to coordinate the Work with any on-going operations and/or work to be performed by the SJRA and others at the site of the Work.

5.8 Contractor has correlated information known to Contractor, information and observations obtained from visits to the site of the Work, reports and drawings identified in the Contract Documents or made available to Contractor by SJRA, and all additional examinations, investigations, explorations, tests, studies, and data with the Contract Documents.

5.9 Contractor has given SJRA prompt written notice of all conflicts, errors, ambiguities, or discrepancies that Contractor has discovered in the Contract Documents, and the written resolution thereof by SJRA is acceptable to Contractor. If Contractor fails to provide SJRA with prompt written notice of any conflicts, errors, ambiguities, or discrepancies that Contractor knew of, or in using reasonable diligence should have known, then Contractor shall be responsible for correction of such conflicts, errors, ambiguities, or discrepancies and damages related thereto.

5.10 The Contract Documents are generally sufficient to indicate and convey understanding of all requirements for performance and furnishing of the Work.

5.11 Contractor hereby agrees that the following terms, conditions, verifications, certifications, and representations apply to and are incorporated into this Agreement for all purposes, and Contractor shall deliver to SJRA signed and notarized verifications prior to commencement of any Work:

(a) With respect to performing the Work and providing the Goods hereunder, Contractor shall comply with any applicable Equal Employment Opportunity and/or Affirmative Action ordinances, rules, or regulations during the term of this Agreement.

(b) Pursuant to Texas Local Government Code Chapter 176, Contractor shall submit a signed Texas Ethics Commission ("TEC") Conflict of Interest Questionnaire ("CIQ") at the time Contractor submits this signed Agreement to SJRA. TEC Form CIQ and information related to same may be obtained from TEC website by visiting https://www.ethics.state.tx.us/forms/conflict/. If Contractor certifies that there are no Conflicts of Interest, Contractor shall indicate so by writing name of Contractor's firm and "No Conflicts" on the TEC Form CIQ.

(c) If Contractor is a privately held entity, then pursuant to Texas Government Code Section 2252.908 and the rules promulgated thereunder by the TEC, Contractor shall submit a completed and signed TEC Form 1295 with a certificate number assigned by the TEC to SJRA at the time Contractor submits this signed Agreement to SJRA. TEC Form 1295 and information related to same may be obtained from TEC website by visiting https://www.ethics.state.tx.us/filinginfo/1295/. Contractor agrees and acknowledges that this Agreement shall be of no force and effect unless and until Contractor has submitted said form to SJRA, if and to the extent such form is required under Government Code § 2252.908 and the rules promulgated thereunder by the TEC.

(d) As required by Chapter 2271, Texas Government Code, Contractor hereby verifies that Contractor, including a wholly owned subsidiary, majority-owned subsidiary, parent company or affiliate of the same, does not boycott Israel and will not boycott Israel through the term of this Agreement. The term "boycott Israel" in this Paragraph has the meaning assigned to such term in Section 808.001 of the Texas Government Code, as amended.

(e) Pursuant to Chapter 2252, Texas Government Code, Contractor represents and certifies that, at the time of execution of this Agreement, neither Contractor, nor any wholly owned subsidiary, majority-owned subsidiary, parent company or affiliate of the same, is engaged in business with Iran, Sudan, or any terrorist organization, and is a company listed by the Texas Comptroller of Public Accounts under Sections 2270.0201 or 2252.153 of the Texas Government Code.

(f) As required by Section 2274.002, Texas Government Code (as added by Senate Bill 13, 87th Texas Legislature, Regular Session), as amended, Contractor hereby verifies that Contractor, including any wholly owned subsidiary, majority-owned subsidiary, parent company or affiliate of the same, does not boycott energy companies, and will not boycott energy companies during the term of this Agreement. The term "boycott energy companies" in this Paragraph shall have the meaning assigned to the term "boycott energy company" in Section 809.001, Texas Government Code, as amended.

(g) As required by Section 2274.002, Texas Government Code (as added by Senate Bill 19, 87th Texas Legislature, Regular Session, "SB 19"), as amended, Contractor hereby verifies that Contractor, including any wholly owned subsidiary, majority-owned subsidiary, parent company or affiliate of the same, (i) does not have a practice, policy, guidance or directive that discriminates against a firearm entity or firearm trade association, and (ii) will not discriminate against a firearm entity or firearm trade

association during the term of this Agreement. The term "discriminate against a firearm entity or trade association" in this Paragraph shall have the meaning assigned to such term in Section 2274.001(3), Texas Government Code (as added by SB 19), as amended.

(h) Pursuant to Chapter 2274 of the Texas Government Code (as added by Senate Bill 2116, 87th Legislature, Regular Session), as amended, and to the extent this Agreement grants to Contractor direct or remote access to the control of critical infrastructure, excluding access specifically allowed for product warranty and support, Contractor verifies that neither Contractor, including any wholly owned subsidiary, majority-owned subsidiary, parent company, or affiliate of the same, nor any of its sub-contractors are: (i) owned or controlled by (a) individuals who are citizens of China, Iran, North Korea, Russia, or a designated country; or (b) a company or other entity, including a governmental entity, that is owned or controlled by citizens of or is directly controlled by the government of China, Iran, North Korea, Russia, or a designated country; or (ii) headquartered in China, Iran, North Korea, Russia or a designated country. The term "designated country" in this Paragraph means a country designated by the Governor as a threat to critical infrastructure under Section 2274.0103, Texas Government Code. The term "critical infrastructure" in this Paragraph shall have the meaning assigned to such term in Section 2274.0101, Texas Government Code.

Contractor acknowledges and agrees that projects of SJRA may be subject to review and approval by other third parties. Accordingly, as and when requested by SJRA, Contractor shall submit such information and cooperate with the other third parties to the extent necessary to undergo any such review or obtain any such approval.

5.12 Contractor warrants that (1) all Goods, including but not limited to all materials and equipment furnished under this Agreement will be new and of good quality unless otherwise expressly provided herein; (2) all Work will be performed in a good and workmanlike manner, and free from defects in material and workmanship; and (3) all Work and Goods provided, will conform to the requirements of the Contract Documents. Work not conforming to these requirements, including any substitutions not properly approved and authorized in writing by SJRA, may be considered defective. The Contractor shall promptly correct all Work and Goods provided, rejected by SJRA as failing to conform to the requirements of the Contract Documents. The Contractor shall bear all costs of correcting such rejected Work or rejected Goods, including but not limited to the costs of uncovering the Work, and costs of repairing or replacing other work or goods, property or improvements of SJRA damaged as a result of Contractor's defective Work, defective Goods, or Contractor's correction of its defective Work or defective Goods, and any additional inspections or testing required. In addition to the Contractor's other obligations including but not limited to any other implied or express warranties under the Contract Documents, the Contractor shall, for a period of one (1) year after completion of the Work, correct all Work and supplied Goods not conforming to the requirements of the Contract Documents at Contractor's sole cost and expense. If the Contractor fails to correct non-conforming Work and supplied Goods, within a reasonable time, SJRA may correct it and Contractor shall promptly pay SJRA all costs of correction. Nothing contained in this Paragraph 5.12 shall be construed to establish a period of limitation with respect to other obligations which the Contractor might have under the Contract Documents or at law or in equity. Establishment of the one-year period for correction of Work and supplied Goods, as described in this Paragraph 5.12 relates only to the specific obligation of the Contractor to correct the Work and supplied Goods, and has no relationship to the time within which the obligation to comply with the Contract Documents and any implied warranties may be sought to be enforced, nor to the time within which legal proceedings may be commenced to establish the Contractor's liability with respect to the Contractor's obligations other than specifically to correct the Work and supplied Goods.

5.13 Contractor shall not subcontract the performance of the entire Work, supply of Goods, or the supervision and direction of the Work without SJRA's prior written consent. Contractor shall not employ any subcontractor, whether initially or as a substitute, against whom SJRA may have reasonable objection. Contractor shall enter into written agreements with all subcontractors which specifically bind the subcontractors to the applicable terms and conditions of the Contract Documents for the benefit of SJRA. All

damage, injury or loss to any property caused, directly or indirectly, in whole or in part, by Contractor or any subcontractor, supplier or any person or organization directly or indirectly employed by any of them to perform or furnish any of the Work or anyone for whose acts any of them may be liable, shall be remedied by Contractor (except to the extent of damage or loss attributable to errors or omissions in the drawings or specifications (unless Contractor had knowledge of the error or omission or using reasonable care should have known of the error and Contractor failed to report same), or to the acts or omissions of Owner or anyone employed by Owner, or anyone for whose acts any of them may be liable other than Contractor or its agent, or employee, or subcontractors of any tier).

5.15 Contractor shall maintain a work force adequate to accomplish the Work within the Contract Time. Contractor agrees to employ only orderly and competent workers, skillful in performance of the Work. Contractor and any subcontractor, and their respective employees, may not use or possess any alcoholic or other intoxicating beverages, illegal drugs or controlled substances while on the job or SJRA property, nor may such workers be intoxicated, or under the influence of alcohol or drugs, on the job. Subject to the applicable provision of Texas law, Contractor and any subcontractor and their respective employees, may not use or possess any firearms or other weapons while on the job or on SJRA property. If the SJRA or an SJRA Division representative notifies Contractor that any of worker or representative is incompetent, disorderly, abusive, or disobedient, has knowingly or repeatedly violated safety regulations, has possessed any firearms in contravention of the applicable provisions of Texas Law or this Agreement, or has possessed or was under the influence of alcohol or drugs on the job, Contractor shall immediately remove such worker or representative, including any officer or owner of Contractor, from performing the Work, and may not employ such worker or representative again on the Work without SJRA's prior written consent. Contractor shall at all times maintain good discipline and order on SJRA property in all matters pertaining to this Work.

5.16 Contractor agrees to assign and hereby assigns to SJRA any rights it may have to bring antitrust suits against its manufacturers or suppliers for overcharges on materials incorporated in the Work growing out of illegal price fixing agreements. Contractor further agrees to cooperate with SJRA should SJRA wish to prosecute suits against manufacturers or suppliers for illegal price fixing.

5.17 Contractor shall be fully responsible to SJRA for all acts and omissions of the subcontractors, manufacturers, or suppliers and other persons and organizations performing or furnishing any of the Work under a direct or indirect contract with Contractor just as Contractor is responsible for Contractor's own acts and omissions. Nothing in the Contract Documents shall create for the benefit of any such subcontractor, manufacturer, or supplier or other person or organization any contractual relationship between SJRA and any such subcontractor, supplier, manufacturer or other person or organization, nor shall it create any obligation on the part of SJRA to pay or to see to the payment of any moneys due any such subcontractor, manufacturer or supplier or other person or organization except as may otherwise be required by laws and regulations.

5.18 Contractor shall be solely responsible for efficiently scheduling and coordinating the Work of subcontractors, manufacturers, suppliers and other persons and organizations performing or furnishing any of the Work under a direct or indirect contract with Contractor in order to avoid any delays or inefficiencies in the prosecution of the Work. Contractor shall require all subcontractors, manufacturers, suppliers and such other persons and organizations performing or furnishing the any of the Work to communicate with the designated SJRA Division representative through Contractor.

5.19 Contractor shall pay each subcontractor, manufacturer and supplier their appropriate share of payments made to Contractor not later than ten (10) days from Contractor's receipt of payment from SJRA. To the extent allowed by Texas law, SJRA shall be deemed to be a third party beneficiary to each subcontract and may, if SJRA elects, following a termination of the Contractor, require that the subcontractor(s) perform all or a portion of unperformed duties and obligations under its subcontract(s) for the benefit of SJRA, rather than the Contractor; however, if SJRA requires any such performance by a subcontractor for SJRA's direct benefit, then SJRA shall be bound and obligated to pay such subcontractor the reasonable value for all Work performed by subcontractor to the date of termination of the Contractor, less payments to Contractor for such

subcontractor's work, and for all Work performed by subcontractor thereafter. In the event that SJRA elects to invoke its right under this Paragraph. SJRA will provide written notice of such election to the terminated Contractor and the affected subcontractor(s).

5.20 Contractor shall be responsible at all times for compliance with applicable patents or copyrights encompassing, in whole or in part, any design, device, material, or process utilized directly or indirectly, in the performance of the Work or the formulation of any of the exhibits hereto. SJRA reserves the right to provide its own defense to any suit or claim of infringement of any patent or copyright in which event **CONTRACTOR SHALL INDEMNIFY AND SAVE HARMLESS SJRA FROM ALL COSTS AND EXPENSES OF SUCH DEFENSE AS WELL AS SATISFACTION OF ALL JUDGMENTS ENTERED AGAINST SJRA**. SJRA shall have the right to stop the Work and /or terminate this Agreement at any time in the event SJRA discovers that Contractor's work methodology includes the use of any infringing design, device, material or process.

ARTICLE 6
INDEMNIFICATION; MISCELLANEOUS PROVISIONS

6.1 **Indemnification.**

6.1.1 **TO THE FULLEST EXTENT PERMITTED BY LAWS AND REGULATIONS, CONTRACTOR SHALL DEFEND, INDEMNIFY AND HOLD HARMLESS THE SJRA AND ITS OFFICERS, DIRECTORS, EMPLOYEES, AGENTS, CONSULTANTS, AND OTHER CONTRACTORS (EACH AN "INDEMNITEE" AND COLLECTIVELY, THE "INDEMNITEES") FROM AND AGAINST ALL CLAIMS, COSTS, LOSSES, AND DAMAGES (INCLUDING BUT NOT LIMITED TO ALL FEES AND CHARGES OF ENGINEERS, ARCHITECTS, ATTORNEYS, AND OTHER PROFESSIONALS AND ALL COURT OR ARBITRATION OR OTHER DISPUTE RESOLUTION COSTS) ARISING OUT OF OR RELATING TO THE PERFORMANCE OF THE WORK OR THE SUPPLY OF THE GOODS, PROVIDED THAT ANY SUCH CLAIM, COST, LOSS, OR DAMAGE IS ATTRIBUTABLE TO BODILY INJURY, SICKNESS, DISEASE, OR DEATH, OR TO INJURY TO OR DESTRUCTION OF TANGIBLE PROPERTY (OTHER THAN THE WORK OR THE GOODS THEMSELVES), INCLUDING THE LOSS OF USE RESULTING THEREFROM, BUT ONLY TO THE EXTENT CAUSED BY ANY NEGLIGENT ACT OR OMISSION OF CONTRACTOR, ANY SUBCONTRACTOR, ANY SUPPLIER, OR ANY INDIVIDUAL OR ENTITY DIRECTLY OR INDIRECTLY EMPLOYED BY CONTRACTOR, ANY SUBCONTRACTOR, OR ANY SUPPLIER TO PERFORM ANY OF THE WORK OR SUPPLY ANY OF THE GOODS, OR ANYONE FOR WHOSE ACTS CONTRACTOR, ANY SUBCONTRACTOR, OR ANY SUPPLIER MAY BE LIABLE, AND EVEN IF ANY SUCH CLAIM, COST, LOSS OR DAMAGE IS CAUSED IN PART BY THE NEGLIGENT ACT OR OMISSION OF AN INDEMNITEE.**

6.1.2 In any and all claims against the Indemnitees by any employee (or the survivor or personal representative of such employee) of Contractor, any subcontractor, any supplier, or any individual or entity directly or indirectly employed by Contractor, any subcontractor, or any supplier to perform any of the Work or to supply any of the Goods, or anyone for whose acts Contractor, any subcontractor, or any supplier may be liable, the indemnification obligation under this Article shall not be limited in any way by any limitation on the amount or type of damages, compensation, or benefits payable by or for Contractor or any such subcontractor, supplier, or other individual or entity under workers' compensation acts, disability benefit acts, or other employee benefit acts.

6.1.3 Contractor's obligations under this Agreement to defend, indemnify and hold harmless SJRA shall not be limited in any way by any insurance required of Contractor by this Agreement or otherwise provided or maintained by Contractor. Any insurance obligations of Contractor under this Agreement are independent from Contractor's obligations under this Agreement to defend, indemnify and hold harmless SJRA.

6.2 **Assignment of Contract**. No assignment of any rights under or interests in this Agreement will be binding on another Party hereto without the written consent of the Party sought to be bound, and unless specifically stated to the contrary in any written consent to an assignment, no assignment will release or discharge the assignor from any duty or responsibility under the Contract Documents.

6.3 **Successors and Assigns**. The SJRA and Contractor each binds itself, its partners, successors, permitted assigns, and its legal representatives to the other Party hereto, its partners, successors, permitted assigns, and its legal representatives in respect to all covenants, agreements, and obligations contained in the Contract Documents.

6.4 **Termination of Contract.** SJRA may terminate this Agreement without cause and for its convenience at any time upon **thirty (30)** days' written notice. Upon the Contractor's receipt of such notice, the Contractor shall cease performing the Work immediately. The Contractor shall be compensated for the Work satisfactorily performed and Goods satisfactorily delivered, prior to the termination date.

6.5 **Dispute Resolution.** This Agreement and any disputes related to it shall be governed by and construed in accordance with the laws of the State of Texas, without regard to its conflict or choice of law principles. Contractor agrees and acknowledges that Contractor's obligations under this Agreement must be performed in whole or in part in Montgomery County, Texas, and venue of any and all legal proceedings between SJRA and the Contractor shall lie in Montgomery County, Texas. If Contractor brings any claim against SJRA and Contractor does not prevail with respect to such claim, Contractor shall be liable for all attorneys' fees and costs incurred by SJRA as a result of such claim.

6.6 **Independent Contractor.** It is understood and agreed that the relationship of Contractor to SJRA shall be that of an independent contractor. Nothing contained herein or inferable here from shall be deemed or construed to (1) make the Contractor the agent, servant, or employee of SJRA, or (2) create any partnership, joint venture, or other association between SJRA and Contractor. Contractor shall be solely responsible for all means, methods, techniques and safety measures utilized in performance of the Work and the supply of the Goods.

6.7 **Safety.** Contractor agrees that, as between SJRA and Contractor, Contractor shall be solely responsible for the safety of its employees, and the establishment and enforcement of all safety precautions, programs and practices in connection with the Work as necessary to protect all persons and property from injury, death, loss or damage arising out of or related to the Work and to the supply of the Goods, including but not limited to the erection and maintenance of barricades, installation of warning signage, and institution of other traffic and/or pedestrian control measures, and Contractor shall at all times comply with all health, safety and environmental federal, state and local laws, codes, regulations, ordinances and permits applicable to the Work and to the supply of the Goods, including but not limited to the Occupational Safety and Health Act of 1970 (OSHA) as amended and the regulations thereto, all requirements of the Texas Commission on Environmental Quality, and the Centers for Disease Control and Prevention (CDC).

6.8 **Use of Premises.** Contractor shall confine construction equipment, the storage of materials and equipment, and the operations of workers to the site of the Work and land and areas identified in and permitted by the Contract Documents, and other land and areas permitted by laws and regulations, rights-of-way, permits and easements, and shall not unreasonably encumber the site of the Work with construction equipment or other materials or equipment. During the progress of the Work and on a daily basis, Contractor shall keep the site of the Work free from any accumulations of waste materials, rubbish and other debris resulting from the Work. Contractor shall provide such personnel, waste containers and/or equipment necessary to maintain an orderly, clean and safe work site. Contractor shall keep all streets, access streets, driveways, and areas of public access, walkways, and other designated areas clean and open at all times. Contractor shall remove all waste materials, rubbish and debris from and about the site of the Work at the end of each work day. At the completion of the Work, Contractor shall also remove all tools, appliances, construction equipment and machinery, and surplus materials. Contractor shall leave the site of the Work

clean, and restore to original condition all property not designated for alteration by the Contact Documents. If the Contractor fails to clean up at the end of each workday or restore the site of the Work at the completion of the Work, SJRA may do so and the cost thereof will be charged to the Contractor and may be offset against any sum otherwise due Contractor.

6.9 **Legal Compliance.** Contractor shall comply with all federal, state and local laws, codes, regulations, ordinances and permits applicable to performance of the Work, including but not limited to all wage and employment laws, and the Immigration Reform and Control Act of 1986, as amended, and Contractor shall maintain and require that its subcontractors maintain any and all licenses required for performance of the Work.

6.10 **Stop Work Notice.** SJRA may issue an immediate "Stop Work Notice" in the event the Contractor is observed performing Work in a manner that is in violation of federal, state and local laws, codes, regulations, ordinance and permits, or in a manner that is determined by SJRA to be unsafe to either life or property. Upon Contractor's receipt of the Stop Work Notice, the Contractor shall immediately cease all Work until notified by SJRA that the violation or unsafe condition has been corrected. The Contractor shall be liable for all costs incurred by SJRA as a result of the issuance of such Stop Work Notice.

6.11 **Insurance.** Contractor shall obtain and maintain insurance as provided in **Exhibit B** attached hereto and incorporated herein.

6.12 **SJRA's Rights and Remedies.** All rights and remedies of SJRA under the Contract Documents are cumulative and in addition to all other rights and remedies available to SJRA at law or in equity.

6.13 **Warranty**. Contractor shall provide a one (1) year warranty document. This warranty shall be substantially similar to those warranties in Paragraph 5.12 above, and shall obligate the Contractor to provide all equipment, materials, workmanship, and labor at no charge during the Warranty period, and to correct any defect excluding any damage caused by misuse, abuse, vandalism, or acts of God.

6.14 **Shipping Terms of Sale.** SJRA shipping terms of sale is FOB Destination.

6.15 **Removal, Transportation and Return of SJRA's Property, Equipment or Parts.** Contractor is responsible for any damages occurring to SJRA property, equipment or parts while Contractor, or any subcontractor or third party acting on behalf of Contractor, is (i) working on SJRA property, equipment or parts; or (ii) transporting SJRA property, equipment or parts.

6.16 **Confidentiality.** Neither Contractor nor any of its subcontractors shall publish or release any publicity or public relations materials of any kind concerning or relating to this Agreement, the Work or the activities of SJRA, unless such materials have first been reviewed and approved in writing by SJRA. This provision shall not apply to mandatory reports which Contractor or its subcontractors are required by law to file with governmental authorities.

ARTICLE 7
ENUMERATION OF CONTRACT DOCUMENTS

7.1 The Contract Documents are comprised of this Agreement and the following exhibits:

Exhibit A: City of Tucson Contract #212755
Exhibit B: Insurance Requirements
Exhibit C: Contractor's Certificate of Insurance

7.2 The Contract Documents may only be amended, modified, or supplemented in writing agreed to and signed by the Parties.

7.3 The Contract Documents represent the entire and integrated agreement between SJRA and the Contractor and supersede all prior and contemporaneous negotiations, representations, or agreements, either written or oral.

7.4 To the extent there are any conflicts between the terms and provisions of this Agreement and the other Contract Documents, this Agreement shall control.

***** Remainder of Page Left Blank Intentionally *****

ARTICLE 8
SIGNATURES

8.1 This Agreement may be executed in counterparts, each of which shall be deemed an original, but all of which together shall be deemed to be one and the same agreement. A signed copy of this Agreement delivered by facsimile, email, or other means of electronic transmission shall be deemed to have the same legal effect as delivery of an original signed copy of this Agreement. Duplicate copies of duly executed and delivered counterparts of this Agreement shall be deemed to have the same full force and effect as originals and may be relied upon as such. Notwithstanding the foregoing, SJRA and Contractor agree that this Agreement may be executed using electronic signatures only at the option and in the sole discretion of SJRA, and, in such event, the provisions of the Uniform Electronic Transaction Act, Chapter 332, Texas Business and Commerce Code, as amended, and any applicable policies and procedures of SJRA regarding electronic signatures shall apply. SJRA reserves the right to require an original, hard copy executed Agreement.

IN WITNESS WHEREOF, the Parties have entered into this Agreement as of the day and year herein below written.

EXECUTED this _____ day of _____, 20____.

SAN JACINTO RIVER AUTHORITY:

_____
Aubrey A. Spear, General Manager

APPROVED AS TO CONTENT:

_____
Samir Solanki, Chief Operations Officer

APPROVED AS TO FORM:

_____
Amy L. Sims, General Counsel

CARBON ACTIVATED CORPORATION:

_____
Name, Title, Date

CITY OF TUCSON
COOPERATIVE PURCHASING AGREEMENT

This Agreement entered into this 5th day of October between the City of Tucson hereinafter called the "City" and San Jacinto River Authority, a public procurement unit, hereinafter called "eligible procurement unit," to permit the eligible procurement unit to purchase materials and services from vendors at the prices and terms contained in contracts between the City of Tucson and those vendors. Any eligible procurement unit may enter into an Agreement with the City of Tucson Department of Procurement for the purpose of utilizing their respective cooperative contracts. (Arizona Revised Statutes § 41-2632).

In consideration of the mutual promises contained in this Agreement, and of the mutual benefits to result thereof, the parties agree as follows:

1. The City shall make available certain contracts to the eligible procurement units.

2. For those contracts awarded by the City, specifications for the materials and services will be determined by the City of Tucson Department of Procurement.

3. City procurement processes shall be conducted in accordance with the City's Charter (Chapter 28), the City Procurement Code and City Department of Procurement administrative policies and procedures. The eligible procurement unit will insure that its own legal requirements are met and shall be responsible for any additional actions that may be necessary to meet those requirements.

4. The City may invite an eligible procurement unit to participate in any solicitation.

5. The eligible procurement unit shall:
   a. Insure that purchase orders issued against eligible City contracts are in accordance with the terms and prices established in the City contract.
   b. Make timely payments to the vendor for all materials and services received in accordance with the terms and conditions of the City contract. Payment for materials or services and inspection and acceptance of materials or services ordered by the eligible procurement unit shall be the exclusive obligation of such unit.
   c. Not use a City contract as a method for obtaining additional concessions or reduced prices for contracted materials or services. The eligible procurement unit shall not advertise or market City contracts without the City's prior written consent.
   d. Be responsible for ordering materials or services under this agreement. The City shall not be liable in any fashion for any violation by eligible procurement unit of this agreement, and the eligible procurement unit shall be responsible for any liability which may arise from action or inaction of the eligible procurement unit relating to this agreement or its subject matter.

6. The exercise of any rights or remedies by the eligible procurement unit shall be the exclusive obligation of such unit.

7. This Agreement shall take effect upon execution by the parties and shall continue until it is terminated in accordance with its terms. This Agreement supersedes any and all previous cooperative purchase agreements.

8. Either party may terminate this Agreement with at least thirty (30) days' written notice to the other party.

9. Failure of the eligible procurement unit to secure performance from the contractor in accordance with the terms and conditions of its purchase order does not necessarily require the City to exercise its own rights or remedies.

10. This Agreement may be cancelled pursuant to the provisions of A.R.S. § 38-511.

11. This Agreement is exempt from the provisions of A.R.S. § 11-952, Subsections D and F under provision of A.R.S. § 41-2632.

12. The City and the eligible procurement unit agree not to discriminate against any employee or applicant for employment in violation of the terms of Federal Executive Order 11246.

13. Appropriate action by ordinance, resolution or otherwise pursuant to the laws applicable to the eligible procurement unit shall be necessary before this agreement becomes effective.

IN WITNESS WHEREOF, the parties of this Agreement have caused their names to be affixed hereto by their proper officers on the dates indicated.

ELIGIBLE PROCUREMENT UNIT CONTACT INFORMATION:

Justin Ford / Procurement Mgr.
Name/Title

1577 Dam Site Rd. Conroe, Tx 77304
Address

936-588-7172
Phone #

jford@sjra.net
Email Address:

AUTHORIZED AUTHORITY FOR THE ELIGIBLE PROCUREMENT UNIT:

Aubrey A. Spear
Signature

Aubrey A. Spear
Printed Name

General Manager
Title

Dated this 5th day of October, 2026

FOR THE CITY OF TUCSON:

Nathan Davis
Signature

Nathan Davis
Printed Name

Procurement Administrator
Title

Dated this 8th day of October, 2026

APPROVED AS TO FORM:

Attorney for Eligible Procurement Unit

Dated this 30 day of September, 2026

Form approved this 12th day of May, 2023, for the City of Tucson. (Form with original signature of approval is on file in the City Clerk's Office.)

Regina Nassen, Principal Assistant City Attorney

ACTIVATED CARBON
& SERVICES

DATASHEET

ACOC-AL 60 (12x40 mesh)

LIQUID PHASE ACID WASHED COCONUT SHELL ACTIVATED CARBON

ACOC - L60 Granular Activated Carbon (GAC) is manufactured from select grades of coconut shell and acid washed to yield a high purity and low ash content. **ACOC - L60** features a high density, large micropore volume and high surface area. It's commonly used for beverage manufacture, dialysis, potable water, and a variety of food grade applications. In properly designed systems, **ACOC - L60** will effectively remove chlorine, chloramines, lead, TCE, PCE, THM's, Phenols, pesticides, detergents, unwanted taste and odor, and more. **ACOC - L60** meets AWWA Standards, ANSI/NSF Standard 61 and Food Chemicals Codex Standards for drinking water applications.

SPECIFICATIONS	ACOC-AL60	ASTM METHOD
CCl4 Activity, min.	60	D-3467
Total Surface Area	1150 - 1200 m2/g	(BET)
Iodine Number, min.	1150 – 1200 mg/gm.	D-4607
Apparent Density, g/cc	0.50 – 0.52	D-2854
lb/ft³	31 – 32.5	
Abrasion No., min.	85	AWWA B 604/74
Hardness, min.	99	D-3802
Particle Size	12x40	–
Larger than No. 12 max.	5%	–
Smaller than No. 40 max.	3%	–
Ash, max.	0.5%	D-2866
Moisture, max.	2%	D-2867
pH	7 – 8	D-3838

APPLICATIONS

Used for beverage manufacture, dialysis, potable water, and a broad variety of food grade applications

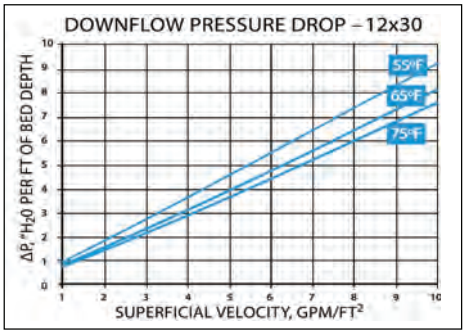

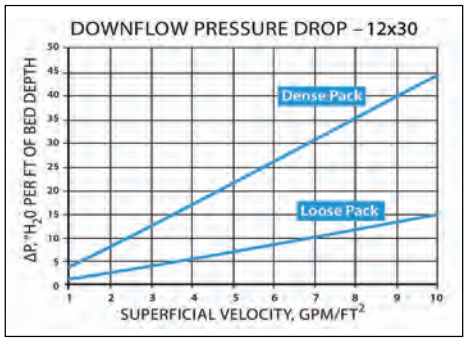

STANDARD PACKAGING

- 55 lb or 27. 5 lb polylined polypropylene bags
- 200 lb fiber drums
- 1100 lb supersacks

This information is offered solely for your consideration and verification. It has been gathered from reference materials and/or test procedures and is believed to be true and accurate. None of this information shall be constituting a warranty or representation, expressed or implied, for which we assume legal responsibility or that the information or goods described is fit for any particular use either alone or in combination with other goods or processes.

2250 South Central Avenue, Compton California 90220 t 310 885-4555 f 310 885-4558 info@activatedcarbon.com activatedcarbon.com

ACTIVATED CARBON
& SERVICES

DATASHEET

ACOL-L 60 (8x30)

LIQUID PHASE ACID WASHED BITUMINOUS COAL BASE ACTIVATED CARBON

ACOL-L60 is a hard and regenerable granular activated carbon (GAC) made from select grades of bituminous coal. This highly-active granular activated carbon has been acid washed to minimize residual ash. **ACOL-L60** has a high density with a large pore volume and high surface area. Its pore structure has been developed for the adsorption of both high and low molecular weight impurities. **ACOL-L60** is commonly used for purifying potable water, ground water and waste water, and a variety of decolorizing/deodorizing applications. **ACOL-L60** meets AWWA and Food Chemicals Codex Standards for drinking water applications and is ANSI/NSF Standard 61 certified.

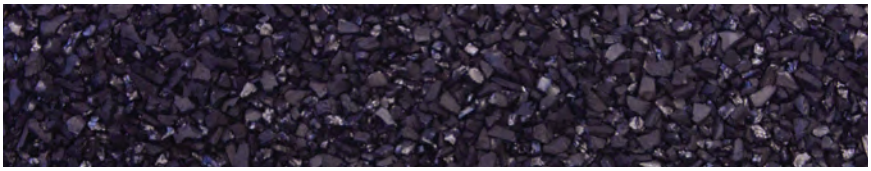

SPECIFICATIONS	ACOL-L60	ASTM METHOD
CTC No. min.	60	ASTM D3476-04
Total Surface Area	1000 – 1100 m^2/g	BET Method
Iodine Number, min.	950 – 1050 mg/g	ASTM D4607-94
Apparent Density	0.48 – 0.50 g/cc	ASTM 2854-09
Bulk Density,	30 – 31 lb/ft^3	
Abrasion No., min.	80 %	AWWA B 604/74
Hardness, min.	90 %	ASTM D3802-89
Ash, max.	8 %	ASTM D2866-94
Water Soluble Ash, max.	1 %	
Moisture as packed, max.	2 %	ASTM D2867-99
Water Extractable Phosphate, max.	1 %	–
U.S. Standard Sieve Size	8x30	ASTM D2862-10
Retained on No. 8, max.	5 %	
Passing through No. 30, max.	4 %	
Effective Size	0.80 – 1.00 mm	ASTM D2862-10
Uniformity Co-Efficient, max.	1.7	ASTM D2862-10
Mean Particle Diameter	1.5 – 1.7 mm	–
Backwash Expansion:		–
Min.@16gpm/ft^2 70° F	10%	
Min.@18gpm/ft^2 50° F	20%	

APPLICATIONS

Used for purifying potable water, ground water and waste water, and a variety of decolorizing and deodorizing applications

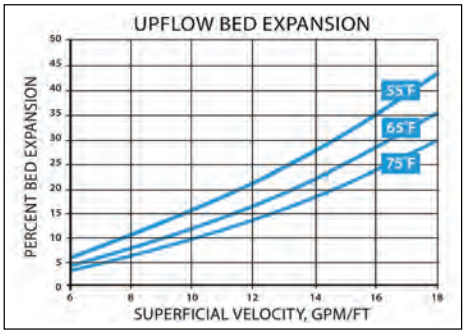

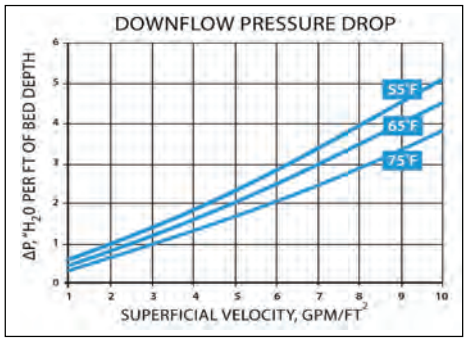

STANDARD PACKAGING

- 55 lb or 27. 5 lb polylined polypropylene bags
- 200 lb fiber drums
- 1100 lb supersacks

This information is offered solely for your consideration and verification. It has been gathered from reference materials and/or test procedures and is believed to be true and accurate. None of this information shall be constituting a warranty or representation, expressed or implied, for which we assume legal responsibility or that the information or goods described is fit for any particular use either alone or in combination with other goods or processes.

2250 South Central Avenue, Compton California 90220 t 310 885-4555 f 310 885-4558 info@activatedcarbon.com activatedcarbon.com

ACTIVATED CARBON
& SERVICES

DATASHEET

AGC-L900 (12x40 mesh)

LIQUID PHASE COAL BASE REAGGLOMERATED ACTIVATED CARBON

AGC–L900 is manufactured from select grades of bituminous coal utilizing a re-agglomeration process and to create a hard and regenerable Granular Activated Carbon (GAC) capable of enduring the abrasion associated with hydraulic transfer and repeated backwashing. **AGC–L900** is a high density carbon with a large pore volume and high surface area. Its pore structure has been developed for adsorption of both high and low molecular weight impurities. **AGC–L900** is commonly used for purifying potable water, ground water and waste water, and a wide variety of decolorizing applications. **AGC-L900** meets AWWA B604 standards and Food Chemicals Codex Standards for drinking water applications, and is ANSI/NSF Standard 61 certified

SPECIFICATIONS	AGC-L900	ASTM METHOD
CTC No. min.	60	D-3467
Total Surface Area, min	900 m^2/g	N2 BET Method
Iodine Number, min.	900 mg/g	D-4607
Apparent Density	0.49 – 0.50 g/cc	D-2854
Hardness, min.	92	D-3802
Ash, max.	8 %	D-2866
Moisture as packed, max.	3 %	D-2867
Abrasion Number ,min	78	AWWA B-604
U.S. Standard Sieve Size	12x40	D-2862
Larger than No. 12, max.	5 %	
Smaller than No. 40, max.	4 %	

SIZE DISTRIBUTION		
US Mesh 12x40	+12	5% max
	- 40	4% max
Effective SIze	0.55 - 0.75 mm	
Uniformity Coefficent	< 1.9	

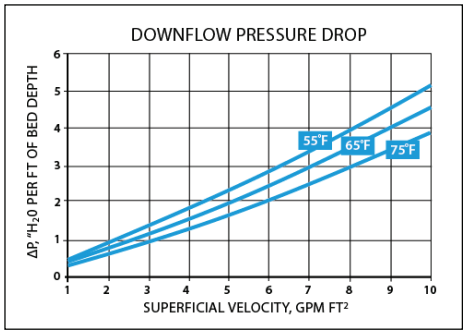

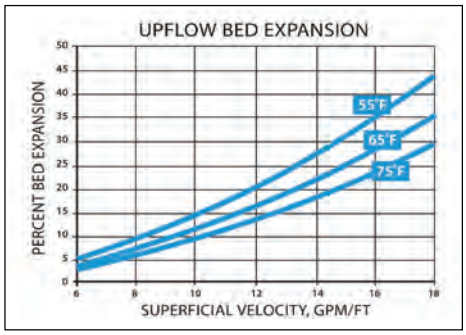

STANDARD PACKAGING

- 55 lb or 27. 5 lb polylined polypropylene bags
- 200 lb fiber drums
- 1100 lb supersacks

This information is offered solely for your consideration and verification. It has been gathered from reference materials and/or test procedures and is believed to be true and accurate. None of this information shall be constituting a warranty or representation, expressed or implied, for which we assume legal responsibility or that the information or goods described is fit for any particular use either alone or in combination with other goods or processes.

2250 South Central Avenue, Compton California 90220 t 310 885-4555 f 310 885-4558 info@activatedcarbon.com activatedcarbon.com

ACTIVATED CARBON
& SERVICES

DATASHEET

COC-RL 50

LIQUID PHASE REACTIVATED COCONUT SHELL CARBON

COC-RL 50 is a hard, regenerable granular activated carbon (GAC) made from select grades of used coconut shell activated carbon which has been thermally reactivated to restore adsorptive properties to a level close to virgin GAC quality. **COC-RL 50** is designed as an economic alternative to virgin carbon, due to lower production cost. Available in standard 12x30 or 12x40 mesh size, this carbon provides very good adsorption in many liquid phase applications such as purifying potable water, ground water and waste water. **COC-RL 50** meets AWWA standards and can be produced under NSF 61 certification.

SPECIFICATIONS	COC-RL 50	ASTM METHOD
CTC No. min.	50	D-3467
Total Surface Area	825 - 925 m^2/g	BET Method
Iodine Number, min.	800 - 900 mg/g	D-4607
Bulk Density	31 – 32 lb/ft^3	D-2854
Hardness, min.	98 %	D-3802
Ash, max.	5 %	D-2866
Moisture as packed, max.	5 %	D-2867
U.S. Standard Sieve Size	12x30 / 12x40	D-2862

APPLICATIONS

Used for purifying potable water, ground water, waste water and other liquid phase applications

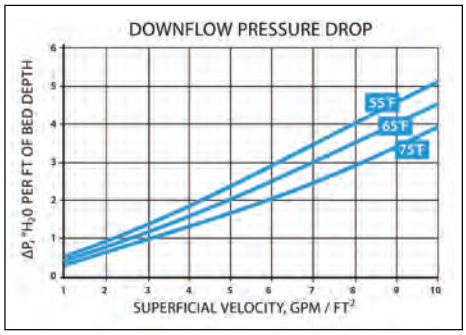

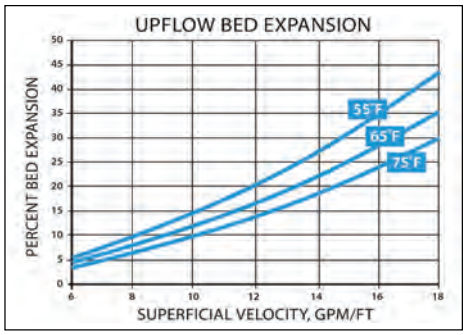

STANDARD PACKAGING

- 55 lb or 27. 5 lb polylined polypropylene bags
- 200 lb fiber drums
- 1100 lb supersacks

This information is offered solely for your consideration and verification. It has been gathered from reference materials and/or test procedures and is believed to be true and accurate. None of this information shall be constituting a warranty or representation, expressed or implied, for which we assume legal responsibility or that the information or goods described is fit for any particular use either alone or in combination with other goods or processes.

2250 South Central Avenue, Compton California 90220 t 310 885-4555 f 310 885-4558 info@activatedcarbon.com activatedcarbon.com

ACTIVATED CARBON
& SERVICES

DATASHEET

COC-A60R (4x10 Mesh)

VAPOR PHASE GRANULAR REACTIVATED CARBON

COC-A 60R is a highly-active reactivated granular activated carbon (GAC) manufactured via high temperature steam activation from selected grades of pooled spent carbon and designed for use in a wide variety of air purifi cation and vapor phase applications. Available in industry standard 4x10 mesh size, this high-quality carbon provides extraordinary surface area, fine pore structure, high density and superior hardness.

SPECIFICATIONS	COC-A 60R	ASTM METHOD
CCl_4 Activity, min.	55	ASTM D3467-04
Total Surface Area, min.	1000 m^2/g	N2 BET Method
Apparent Density	0.48 - 0.50 g/cc	ASTM D-2854-09
	29 - 31 lbs./ft3	
Hardness, min.	98 %	ASTM D-3802-89
Ash, max.	10 %	ASTM D-2866-94
Moisture as packed, max.	2 %	ASTM D-2867-99
U.S. Standard Sieve Size	4x10	ASTM D-2862-10
Larger than No. 4, max.	5 %	
Smaller than No. 10, max.	5 %	

APPLICATIONS

Used for a wide variety of air purification and vapor phase applications

STANDARD PACKAGING

- 55 lb or 27. 5 lb polylined polypropylene bags
- 200 lb fiber drums
- 1100 lb supersacks

This information is offered solely for your consideration and verification. It has been gathered from reference materials and/or test procedures and is believed to be true and accurate. None of this information shall be constituting a warranty or representation, expressed or implied, for which we assume legal responsibility or that the information or goods described is fit for any particular use either alone or in combination with other goods or processes.

3774 Hoover Road, Blasdell NY 14219 t 716 821-7830 f 716 821-0790 nyinfo@activatedcarbon.com activatedcarbon.com

SJRA
SAN JACINTO RIVER AUTHORITY

Board Communication

Item No.	Agenda Item	Date
6.7	Consider approving the Connection and Reimbursement Agreement with the City of Conroe for surface water delivery to the city's McCaleb Road Water Plant No. 26.	**10/22/2026**

BACKGROUND INFORMATION

The City of Conroe is developing a surface water receiving facility near McCaleb Road at its Water Plant No. 26. The project requires a connection to the SJRA GRP surface water transmission system, including associated fiber and SCADA infrastructure.

To facilitate the City's project, SJRA has agreed to perform the design review, procurement, and construction activities necessary to connect the City's facility to the SJRA GRP surface water transmission main system. The City will reimburse SJRA for the actual costs associated with this work.

SJRA will perform, or cause to be performed, the work necessary to establish the connection to the SJRA GRP surface water transmission main. SJRA will retain responsibility for selecting and contracting with the engineers, contractors, and vendors required to complete the work. SJRA will coordinate with the City throughout the project; however, SJRA will retain discretion and control over the means and methods used to perform the connection to the SJRA GRP transmission main.

The City will reimburse SJRA for all actual costs incurred in connection with the work. Reimbursable costs will include, but are not limited to:

Engineering and design services;

Construction and contractor costs;

Materials and equipment;

Fiber and SCADA-related work;

Testing and third-party services, including construction materials testing (CMT); and

SJRA internal project costs, including project management, inspection, construction administration, construction monitoring, and administrative support.

Staff recommends the Board authorize SJRA to proceed with the design, procurement, and construction activities necessary to connect the City's Water Plant No. 26 surface water receiving facility to the SJRA GRP surface water transmission system, subject to reimbursement by the City of all costs incurred by SJRA; and requests execution of the Connection and Reimbursement Agreement with the City of Conroe.

FUNDING SOURCE: GRP O&M Budget – Reimbursed by City of Conroe

ATTACHMENTS: Connection and Reimbursement Agreement

RECOMMENDED ACTION

Approve and execute the Connection and Reimbursement Agreement with the City of Conroe for surface water delivery to the City's McCaleb Road Water Plant No. 26. Sufficient funds are available in Fiscal Year 2027 for this purpose.

CONNECTION AND REIMBURSEMENT AGREEMENT
(McCaleb Road Surface Water Supply Project)

STATE OF TEXAS §
§
COUNTY OF MONTGOMERY §

This Connection and Reimbursement Agreement ("Agreement") is made and entered into effective as of _____, 2026 ("Effective Date"), by and between the **SAN JACINTO RIVER AUTHORITY**, a conservation and reclamation district and political subdivision of the State of Texas ("SJRA"), and the **CITY OF CONROE, TEXAS**, a home-rule municipality ("City"). SJRA and City may be referred to individually as a "Party" and collectively as the "Parties."

RECITALS

WHEREAS, SJRA owns and operates a regional surface water system, including a 60-inch transmission line and associated fiber infrastructure (the "SJRA System");

WHEREAS, the City is developing a surface water receiving facility located near McCaleb Road (the "Project");

WHEREAS, the Project requires a connection to the SJRA System, including a tap on SJRA's transmission line and related fiber coordination;

WHEREAS, SJRA has agreed to perform certain design, procurement, and construction work necessary to facilitate the connection; and

WHEREAS, the City has agreed to reimburse SJRA for the costs associated with such work and to acquire and convey necessary easements to SJRA.

NOW, THEREFORE, for and in consideration of the mutual covenants and agreements herein, the Parties agree as follows:

ARTICLE 1 – SCOPE OF WORK

1.1 <u>SJRA Scope of Work</u>. SJRA shall perform or cause to be performed the work described in **Exhibit A** (the "SJRA Work"). SJRA shall control the selection and contracting of all engineers, contractors, and vendors for the SJRA Work. SJRA shall coordinate with the City in performing the SJRA Work but retains full discretion over means and methods. SJRA shall have no obligation to commence or continue the SJRA Work until this Agreement is fully executed and the initial deposit required under Article 2 has been received.

1.2 <u>City Scope of Work</u>. The City shall:

- Design and construct all facilities downstream of the point of connection identified in Exhibit A;
- Acquire all required easements for the Project and convey required easements to SJRA;
- Install conduit for fiber as coordinated with SJRA;
- Coordinate with SJRA regarding design, scheduling, and construction activities;

ARTICLE 2 – REIMBURSEMENT

2.1 Obligation to Reimburse. The City shall reimburse SJRA for all actual costs incurred by SJRA in connection with the SJRA Work, including, without limitation:

- Engineering and design;
- Construction and contractors;
- Materials and equipment;
- Fiber and SCADA-related work;
- Testing and third-party services (including CMT); and
- SJRA internal costs, including project management, inspection, construction administration, construction monitoring and administrative time, which shall be reimbursed at a rate equal to _20_% of the total direct project costs

2.2 Initial Funding. Prior to commencement of design, the City shall provide an initial deposit in the amount of $_75,000, based on SJRA's estimated engineering and design costs for the water tap to the GRP Water Transmission Line and SCADA System. Any funds surplus to the engineering would be applied towards the construction costs. Prior to commencement of construction, the City shall provide additional funding in an amount equal to one hundred twenty-five percent (125%) of the estimated construction cost. SJRA may, in its discretion, require additional deposits if estimated costs materially increase. SJRA shall have no obligation to commence or continue the SJRA Work if available deposit funds are insufficient to cover projected costs.

2.3 Invoicing and Payment. SJRA shall invoice the City periodically. The City shall pay all undisputed amounts within thirty (30) days. SJRA may, upon written notice, suspend performance of the SJRA Work until such payment is received. SJRA's records of costs shall be maintained in accordance with its standard accounting practices and shall be presumed correct absent manifest error.

2.4 True-Up. All estimates are preliminary. The City shall be responsible for the full actual cost of the SJRA Work. A final reconciliation will be performed upon completion. A final reconciliation shall be performed within one hundred (100) days following completion of the SJRA Work.

2.5 No Cost Cap. The City acknowledges that costs are not guaranteed and are not subject to a fixed maximum unless expressly agreed in writing.

ARTICLE 3 – EASEMENTS

3.1 Acquisition by City. The City shall acquire all easements necessary for the Project, including:

- Utility easements for the connection line;
- Access easements for operation and maintenance of the Project, including the water receiving facility, metering station, and SCADA equipment;

3.2 Conveyance to SJRA. The City shall convey to SJRA, at no cost, all easements required for SJRA's ownership, operation, and maintenance of the connection facilities, in form and substance acceptable to SJRA. SJRA's obligation to construct the tap may be conditioned on receipt of acceptable easements. SJRA shall have no obligation to schedule or perform construction of the tap until such easements have been conveyed and approved by SJRA. SJRA's obligation to perform the tap shall also be conditioned upon receipt and approval of final design plans for the City's receiving facility to ensure compatibility with the SJRA System.

3.3 Encroachments. Any crossing of SJRA easements shall require a separate encroachment agreement.

ARTICLE 4 – DESIGN COORDINATION AND REVIEW

4.1 Plan Review. SJRA may review plans and specifications at various stages of design, including at approximately sixty percent (60%) design completion and ninety percent (90%) design completion. Any comments provided by SJRA are for coordination purposes only and do not constitute approval, certification, or acceptance of the design. The City shall remain solely responsible for the adequacy, accuracy, completeness, and constructability of all plans, specifications, and design documents, as well as compliance with all applicable laws and regulations. The City shall not rely on SJRA's review or comments for design adequacy, accuracy, completeness, or constructability, and such review or comments shall not relieve the City or its design professionals of any responsibility for the design. SJRA may, but is not obligated to, provide connection design details necessary for coordination with the City's facilities.

4.2 Reference Materials. Any SJRA standards, prior submittals, or example designs are provided for reference only and shall not be relied upon as design criteria or as a substitute for the City's independent design. The City and its design professionals remain solely responsible for the adequacy, accuracy, completeness, and constructability of the final design.

ARTICLE 5 – FIBER AND SCADA

5.1 City Responsibilities. The City shall, at its sole cost, design and install all conduit, pull boxes, and associated infrastructure necessary to accommodate the extension of SJRA's fiber system to the Project site, in accordance with requirements provided by SJRA.

All conduit and related infrastructure installed by the City shall be subject to review by SJRA for general conformance with SJRA's requirements; however, such review shall be for coordination purposes only and shall not constitute approval of the design or installation.

5.2 SJRA Responsibilities. SJRA shall perform or contract for the splicing into SJRA's existing fiber main line, pulling fiber through conduit installed by the City, and terminating the fiber at a location determined by SJRA in coordination with the City. SJRA shall have sole discretion in selecting its contractors and determining the means and methods for performing such work.

5.3 Reimbursement. All costs incurred by SJRA in connection with fiber and SCADA work, including but not limited to design coordination, materials, labor, contractor costs, and internal SJRA costs, shall be reimbursed by the City in accordance with Article 2.

5.4 Coordination. The Parties shall coordinate regarding the location of pull boxes, termination points, and integration with SCADA systems. The City shall ensure that its design and construction are compatible with SJRA's existing systems.

5.5 No Warranty of Compatibility. SJRA makes no warranty that the City's installed conduit or infrastructure will be suitable for SJRA's fiber installation. To the extent modifications are required due to deficiencies in the City's installation, the City shall be responsible for all associated costs. SJRA shall notify the City of any identified deficiencies in the City's installed infrastructure and provide the City a reasonable opportunity to correct such deficiencies.

ARTICLE 6 – SCHEDULE

6.1 Schedule of Work. SJRA shall use reasonable efforts to perform the SJRA Work in a timely manner. SJRA does not guarantee completion by any specific date. SJRA shall not be liable for any delays in the performance of the SJRA Work, including, but not limited to, delays resulting from procurement processes, contractor availability, design development, coordination with the City, permitting, or other factors outside SJRA's control. The City shall have no claim against SJRA for any damages, costs, or impacts arising out of such delays.

6.2 Construction Coordination. The City shall provide SJRA with construction schedules, progress updates, and advance notice of key construction activities related to the Project. SJRA shall have the right, but not the obligation, to observe construction and testing activities to verify compatibility with the SJRA System. The City shall provide to SJRA, upon request or upon completion of the Project, testing reports, record drawings, equipment data, and other documentation reasonably necessary for SJRA's operation and maintenance of the connection.

ARTICLE7 – STARTUP / COMMISSIONING

The Parties shall coordinate regarding startup, testing, and commissioning of the connection and related facilities. The City shall provide reasonable advance notice of startup activities and shall coordinate with SJRA to ensure proper integration with SJRA's system, including SCADA and operational controls. SJRA shall have the right to be present during startup and final tie-in activities.

ARTICLE 8 – PROJECT COORDINATION AND NOTICES

Each Party shall designate a representative as follows:

SJRA:
_____Jason Williams_____

_____Cell – 832.381.0330_____

_____Office – 281.367.9511_____

____ Email – jwilliams@sjra.net_____

CITY:
_____

_____

_____

_____

Formal notices required under this Agreement shall be in writing and delivered by hand, recognized overnight carrier, certified mail, or electronic mail to the representatives listed above at the addresses provided by each Party, unless otherwise updated in writing. Notice sent by electronic mail shall be deemed received upon confirmation of delivery or upon reply by the receiving Party, whichever occurs first.

ARTICLE 9 – DATA AND INFORMATION

9.1 Data Sharing. SJRA may provide or share plans, drawings, electronic files, data, or other information for coordination purposes. All such information is provided for convenience only. SJRA makes no representations or warranties regarding the accuracy, completeness, or suitability of such information for any particular purpose. The City shall be solely responsible for independently verifying all information and for its use in design, construction, and operation of the Project. The City shall not rely on any information provided by SJRA as a substitute for its own independent investigation, design, or professional judgment.

9.2 Public Information. The Parties acknowledge that SJRA and the City are each subject to the Texas Public Information Act, Chapter 552, Texas Government Code (the "Act"). Each Party shall be responsible for responding to requests for public information received by that Party in accordance with the Act.

If a Party receives a request under the Act for information provided by the other Party or derived from such information (the "Providing Party"), the Party receiving such request (the "Receiving Party") shall make a good faith effort to notify the Providing Party promptly, and to the extent practicable prior to any deadline for response under the Act. The Providing Party shall be responsible for asserting any applicable exceptions to disclosure and for providing any information or arguments necessary to support such exceptions.

Nothing in this Agreement shall be construed to require either Party to withhold information in violation of the Act or to waive any rights or protections available under the Act.

ARTICLE 10 – LIABILITY AND IMMUNITY

Each Party shall be responsible for its own acts, omissions, and negligence, and for the acts, omissions, and negligence of its officers, employees, agents, contractors, and representatives, in connection with this Agreement and the Project. Nothing in this Agreement shall be construed as creating any joint venture, partnership, or agency relationship between the Parties, or as imposing liability on one Party for the acts or omissions of the other Party. Nothing in this Agreement shall be deemed to waive, modify, or otherwise affect any governmental immunity, defense, or limitation of liability available to either Party under applicable law. This Agreement is for the benefit of the Parties only and does not create any rights in or for any third party.

ARTICLE 11 – GOVERNING LAW AND VENUE

This Agreement shall be governed by and construed in accordance with the laws of the State of Texas. Venue for any action arising out of or relating to this Agreement shall lie exclusively in Montgomery County, Texas, and the Parties hereby consent to the jurisdiction of the courts of Montgomery County, Texas.

ARTICLE 12 – ENTIRE AGREEMENT

This Agreement constitutes the entire agreement between the Parties with respect to the subject matter hereof and supersedes all prior or contemporaneous negotiations, representations, agreements, or understandings, whether written or oral. This Agreement may be amended or modified only by a written instrument executed by duly authorized representatives of both Parties.

ARTICLE 13 – INTERPRETATION AND CONSTRUCTION

This Agreement shall be deemed to have been drafted jointly by the Parties, and no presumption or rule requiring construction against the drafting party shall apply. The headings in this Agreement are for convenience only and shall not affect the interpretation or construction of this Agreement.

ARTICLE 14 – EFFECTIVE DATE AND COUNTERPARTS

This Agreement shall become effective upon execution by both Parties. This Agreement may be executed in multiple counterparts, each of which shall be deemed an original, and all of which together shall constitute one instrument.

[REMAINDER OF PAGE LEFT BLANK INTENTIONALLY]

IN WITNESS WHEREOF, the parties hereto have signed this Agreement in multiple copies, each of which shall be deemed to be an original, but all of which shall constitute but one and the same contract, as of the Effective Date.

SAN JACINTO RIVER AUTHORITY

By: _____
Ronnie Anderson, President
Board of Directors

ATTEST:

By: _____
Wil Faubel, Secretary
Board of Directors

CITY OF CONROE, TEXAS

By: _____
Duke W. Coon
Mayor

ATTEST:

By: _____

City Secretary

CONNECTION AND REIMBURSEMENT AGREEMENT

(McCaleb Road Surface Water Supply Project)

EXHIBIT A (THE "SJRA WORK)

The following describes the "SJRA WORK" as described in Article 1.1 – SJRA Scope of Work:

The SJRA Shall:

- Refer to illustration on next page for layout and construction area of connection point.
- SJRA will procure the services of a design engineering firm knowledgeable with the design and modification of the existing 60-inch mortar coated steel water line and the proposed 12-inch PVC or DIP (whichever is installed by the City to the connection point) water line. This firm shall also be knowledgeable on proper tapping sleeves and equipment required, as well as preparation of mortar coated steel pipe to receive the tapping sleeve and subsequent repairs.
- Design engineering firm (Engineer or Record) shall prepare and provide appropriate drawings, specifications, and engineer's opinion of probable cost to be utilized for contractor procurement by SJRA. It is anticipated there will be two design submittals. In each case, SJRA will provide documents to the City for review and comment.
- SJRA will prepare for and provide construction contractor procurement for the tap construction. It is anticipated the Competitive Sealed Proposal (CSP) method will be utilized.
- SJRA will execute the construction contract with the selected "best value" contractor. The award will not necessarily be to the low bidder.
- SJRA will procure the services of a construction materials testing laboratory for testing required per specifications of bedding and backfill materials.
- SJRA will procure the services of the Engineer of Record to provide Construction Phase Services, including review of product submittals and shop drawings, and responding to Requests for Information (RFIs).
- Once the construction contractor's and testing lab's Purchase Orders have been processed, a SJRA Construction Manager will schedule, prepare for, and conduct a preconstruction meeting to address schedule, product submittals, shop drawing, testing requirements, and SJRA/City of Conroe coordination of the work.
- Ensure the Contractor performs the work in accordance with the contract drawings and specifications. SJRA will provide a construction inspector to supervise the work, to ensure the testing lab is on-site for necessary testing activities.

- SJRA will coordinate with the City's representatives for the connection from the 12-inch tapping gate valve to the proposed 12-inch water line extending into the proposed facility.
- SJRA SCADA/I&C department will coordinate any necessary relocation of the existing fiber optic conduit to accommodate the sleeve installation. If it is found modification is required to move the conduit, SJRA will utilize its on-call fiber optic contractor to perform the necessary splicing/extensions.
- SJRA SCADA/I&C department will coordinate with the City on any fiber connections to the proposed facility.
- SJRA will provide all project management, construction management, inspection, procurement services, SCADA/I&C services, and accounting services necessary to design, procure and build this connection. SJRA will track all hours necessary to perform these activities.

SJRA
SAN JACINTO RIVER AUTHORITY

Board Communication

Item No.	Agenda Item	Date
6.8	Consider authorizing the General Manager to execute a Service Agreement and Service Order with PS Lightwave, Inc., for dark fiber services for the Highlands Division SCADA system.	**10/22/2026**

BACKGROUND INFORMATION

The Highlands Division currently utilizes a dark fiber network leased from PS Lightwave, Inc. ("PS Lightwave"). This solution was evaluated and selected in October 2020, based on its reliability, security, and cost effectiveness. The original agreement included the construction and implementation of the dark fiber infrastructure, along with a five-year lease term. PS Lightwave is also responsible for the ongoing maintenance and support of the fiber infrastructure.

The proposed agreement will provide for the continued leasing and maintenance of the existing dark fiber infrastructure for an additional five-year term, beginning November 2026 and continuing through October 2031. The agreement will encompass both the recurring lease and associated maintenance costs, ensuring continued reliability and uninterrupted communication services for the Highlands Division.

The recurring monthly cost under the new agreement will be $5,160.00, plus applicable regulatory fees. The expenditure is a budgeted operating expense for the Highlands Division and is included in the Fiscal Year 2027 operating budget. PS Lightwave's pricing is available to the San Jacinto River Authority through The Interlocal Purchasing System (TIPS) contract, a national cooperative purchasing organization, providing an established cooperative purchasing mechanism for the procurement of these services.

Continuation of the existing dark fiber service will maintain the Highlands Division's current communication infrastructure without requiring the expense, disruption, or implementation risks associated with transitioning to an alternative communication solution. Based on the established reliability of the existing infrastructure, ongoing maintenance support, budget availability, and cooperative purchasing contract, renewal of the agreement with PS Lightwave is considered the most practical and cost effective option for meeting the Highlands Division's communication requirements.

Staff recommends approval of a five-year agreement with PS Lightwave for the continued lease and maintenance of the Highlands Division's dark fiber infrastructure beginning November 1, 2026, and ending October 31, 2031, for an amount not to exceed $355,000 for the five-year term.

FUNDING SOURCE: Highlands Division Operating and Maintenance Budget

ATTACHMENTS: PS Lightwave Service Agreement

RECOMMENDED ACTION

Authorize the General Manager to execute a Service Agreement and Service Order with PS Lightwave, Inc, for a five-year term in an amount not to exceed $355,000, for dark fiber services for the Highlands Division. Sufficient funds were budgeted and are available in Fiscal Year 2027 for this purpose.

CONTRACT NO. 12621

MASTER SERVICE AGREEMENT

This **Master Service Agreement** (the "Agreement") is effective this _____ day of ___, 2020 ("Effective Date"), between **PS Lightwave, LLC.,** A Texas Corporation ("PS Lightwave") with offices located at 5959 Corporate Drive, Suite 3300, Houston, Texas 77036, and **San Jacinto River Authority** with offices located at 1577 Dam Site Rd. Conroe TX 77304 (hereinafter the "Customer") for the provision of certain Services (collectively the "Services"). PS Lightwave and Customer are referred to collectively as "Parties", and individually as a "Party".

1. **AGREEMENT.** The terms of this Agreement shall apply to the purchase of all Services, and acceptance of PS Lightwave's Service Level Agreement ("SLA") and Acceptable Use Policy ("AUP") (posted at www.pslightwave.com). This Agreement does not, by itself, order any Services. Orders for Services are placed and documented by use of a Service Order form each time Customer orders one or more Services, and shall be incorporated by reference herein and governed by the terms and conditions of this Agreement. In the event of any conflict between this Agreement and the terms of any Service Order (with the exception of any special conditions noted in the applicable Service Order) precedence will be given to the terms of this Agreement. Unless otherwise agreed to in writing by PS Lightwave, no terms and conditions endorsed upon, delivered with or contained in Customer's purchase orders or in any other similar document, will amend or vary the provisions of this Agreement.

2. **TERM AND COMMENCEMENT DATE.**
   a. This Agreement shall begin upon the Effective Date above and shall remain in effect throughout the duration of any and all Service Term(s) until the expiration or termination of the final existing Service Order(s) entered into under this Agreement, whichever occurs last.
   b. The Term of each Service Order commences when testing of the Service has been completed and the Service is operating within specification set forth in this Agreement and either Customer has accepted the Service or is deemed to have accepted the Service. However, when PS Lightwave releases the applicable Services for the Customer's use, the Term shall Commence regardless of whether Customer has procured services from third-party vendors required to operate the Services or whether Customer is otherwise prepared to accept delivery of the provisioned Services ("Commencement Date"). When multiple Services are included in a single Service Order, the Service Term of the entire Service Order (and of each Service included in the applicable Service Order) will begin as of the date on which the last or final Services are released for the Customer's use.

3. **SERVICES.** Services provided by PS Lightwave shall be defined in applicable Service Orders, which will detail the specific terms of Service, including but not limited to term, pricing, amount of service, type of Service, as well as any special conditions defining the provisioning of the Services. Should a Customer receive and use Services without an executed Service Order or Master Service Agreement, Customer shall be deemed to have accepted such Services, and therefore will be bound by any and all current applicable terms and conditions of the Master Service Agreement and applicable Service Order.
   a. **IP Dedicated Internet Services**. PS Lightwave shall retain ownership of all IP numbers and addresses that may be assigned to Customer, and reserves the right to change or remove any and all such IP numbers and address, upon thirty (30) days written notice of such action.
   b. **Dark Fiber Services**. PS Lightwave shall retain ownership of any applicable fiber and Customer's interest shall only be that of a lessee. Additionally, the Applicable Fiber does not include the onsite equipment which Customer will use to interface with the fiber, nor any building interior wiring, whether copper or fiber optic cable.
   c. **Circuit/Data Services (EPL, ELAN, WAN).** PS Lightwave shall deliver dedicated native Ethernet circuit solutions from a facilities-based provider for point-to-point, point-to-multipoint and ring topologies, with a line speed of 10/100/1000 Mbps using IEEE Std 802.3-2012 defined signaling over a VLAN-aware network.
   d. **Colocation Services.** PS Lightwave shall provide access to and certain rights of use with respect to PS Lightwave's Data Center for the purpose of placing equipment, racks and certain associated cabling and related space requirements.
   e. **Telephony Services (VoIP Solutions).** PS Lightwave shall retain ownership of onsite equipment which Customer will use for delivery of the Services. PS Lightwave shall have the right to modify the rates and conditions at any time by providing the Customer a minimum of thirty (30) days advance written notice for domestic long distance rate changes and at least seven (7) days for international rates. VoIP Solution Service Agreement & Acceptable Use Policy terms and conditions may be reviewed on PS Lightwave's website at www.pslightwave.com .
   f. **Bundled Network Service Solution (BNS).** PS Lightwave will customize a BNS Solution consolidating two (2) or more product offerings including but not limited to Voice, IP Dedicated Internet and Private Ethernet Services (EPL, ELAN, WAN) at special bundled pricing. Should a Customer elect to remove one or more products from a contracted BNS solution, PS Lightwave's standard rack rates will apply to the remaining individual services which were consolidated in the original BNS Solution.
   g. **Off-Net Services**. Customer shall pay the charges set forth in the Service Order for off-net services including, with limitation monthly charges, usage charges, installation charges, non-recurring charges or applicable termination/cancellation charges, of the local access provider(s).
   h. **SD-WAN Services.** Software-Defined WAN-optimization solution services across physical, cloud or virtual sites by aggregating multiple network connections for higher bandwidth network links with more reliable, responsive and secure connectivity to support enterprise business-class infrastructures.
   i. **Data Center Services.** PS Lightwave has agreements in place with most of the major telecom data centers in Houston to provision its state-of-the art Ethernet and Internet service offerings.

   Services provided by PS Lightwave to the Customer, are entirely independent, separate and distinct from any services which may be provided by a property owner, and are not included as part of any agreement executed by and between a property owner and its tenants and occupants.

4. **SERVICE PORTABILITY.**
   a. Customer may cancel an existing Service (a "Cancelled Service") without incurring any cancellation or early termination fees or penalties, so long as:

© 2026 PS Lightwave, LLC. – All Rights Reserved

Confidential & Proprietary

i. The Cancelled Service has been installed and in use; and
ii. The Cancelled Service is replaced with another On-Net Service having equal or greater On-Net Service MRCs and equal or greater term commitment (the "Replacement Service"); and
iii. The Replacement Service is ordered within thirty (30) calendar days of the effective date of the cancellation of the Cancelled Service (the effective date of cancellation being the "Cancellation Date"); and
iv. PS Lightwave determines, in its sole discretion, that adequate capacity is available on the PS Lightwave Network for the Replacement Service; and
v. Customer is not otherwise in breach of the Agreement.

b. If Customer fails to meet any of the above criteria for any particular Cancelled Service, Customer shall pay all applicable early termination fees for such Cancelled Service. Customer shall also be provided an estimate of any actual third-party expenses which are charged to PS Lightwave by a third party as a result of any Cancelled Service and shall be liable to reimburse PS Lightwave for any such expenses incurred as a direct result of cancellation of services under this provision.

c. To exercise this portability option, Customer must, prior to the date that Customer cancels the Cancelled Service, notify PS Lightwave in writing of its intent to replace a Cancelled Service with a Replacement Service. PS Lightwave shall credit Customer all applicable early termination fees charged to Customer's account, provide that Customer orders the Replacement Service within thirty (30) days of the Cancellation Date. Notwithstanding the foregoing, in no event shall Customer be credited back for any On-Net Service installation NRCs or any third-party expenses that were charged for any Cancelled service which Customer cancels pursuant to this Section.

d. Forced relocations are excluded under PS Lightwave's Service Maintenance & Support policy. Customer may incur non-recurring charges for a portion of any relocation. PS Lightwave reserves the right to modify its network or the facilities used to provide the Services and shall use reasonable efforts to notify Customer of any planned maintenance.

5. CHANGE IN SERVICE LEVEL. Customer may increase or reduce services provisioned under an existing Service Order by providing PS Lightwave with a minimum of thirty (30) days advance, written notice to be confirmed in an addendum to be executed by and between the Parties. Should Customer decrease service, Customer shall pay all applicable charges calculated on the balance of the term for such reduced service. Customer shall be provided with an estimate of any actual of third-party expenses which are charged to PS Lightwave by a third party as a result of any reduction in service and shall be liable to reimburse PS Lightwave for such expenses incurred as a direct result of a change in service level under this provision. PS Lightwave reserves the right to modify its network or the facilities used to provide the Services and shall use reasonable effort to notify Customer of any planned maintenance.

6. EQUIPMENT

a. Authorized Equipment. "Authorized Equipment" shall be defined as any and all electronics provided by PS Lightwave necessary to provision the contracted Services.

b. Ownership. Except as otherwise agreed, PS Lightwave reserves all right, title and interest in all Authorized Equipment. PS Lightwave's Authorized Equipment shall at all times be and remain personal property, notwithstanding that it may be or become attached to or embedded in real property.

i. Customer shall not, and shall not permit others, to rearrange, disconnect, remove, and attempt to repair or otherwise tamper with any Authorized Equipment provided by PS Lightwave without the prior written consent of PS Lightwave. Customer shall not, and shall not cause any End User (as defined below), to tamper with, remove or conceal any identifying plates, tabs, or labels affixed to Authorized Equipment or facilities. Customer shall be responsible for the cost of any loss, repair or maintenance occasioned by failure of Customer to perform its obligation under this Agreement.

ii. Customer shall not take any action to place any lien or encumbrance on the Authorized Equipment. In no event will PS Lightwave be liable to Customer or any other person for interruption of Services for any other loss, cost or damage caused or related to improper use or maintenance of the Authorized Equipment by Customer or third parties' access to the Services by Customer in violation of these terms, and Customer waives all claims against PS Lightwave, for any damages incurred or claims made as a direct result thereafter.

iii. Customer is entitled to use any PS Lightwave provided Authorized Equipment in connection with the then applicable permissible use policy. However, Customer shall keep confidential all intellectual property provided through any such Authorized Equipment and shall not copy, alter, reverse-engineer, or tamper with such intellectual property nor use it other than in connection with the Services. Customer agrees not to resell, transfer, export or re-export any such Authorized Equipment or any technical data derived therefrom.

c. Unauthorized Equipment. If Customer installs or furnishes, or permits any End User to install or furnish equipment or other property for use in connection with Services ("Unauthorized Equipment") in any area owned or controlled by PS Lightwave, their respective contractors or agents, and if Customer fails to remove (or cause the End User to remove) such Unauthorized Equipment from such area within ten (10) days after the expiration of the applicable Service Term or termination of the applicable Service Order, PS Lightwave may, without notice or demand and in addition to any other right or remedy available at law or equity, take possession of such Unauthorized Equipment, without being guilty of trespass. PS Lightwave may use all force necessary to effect such entry, to remove Customer, to remove any person or End User, or to remove any or all of Customer's or End User's Unauthorized Equipment from such areas and store the same, all at Customer's expense. Any Unauthorized Equipment removed may be stored in any public warehouse or elsewhere at the costs of and for the account of Customer, and PS Lightwave shall not be responsible for the care or safekeeping thereof. Customer expressly waives any and all claims for loss, destruction, damage, or injury, which may be occasioned by any of the aforesaid acts, and shall ensure that all End Users agree to a substantially similar waiver. Any Unauthorized Equipment so removed will be returned to Customer upon payment in full of all storage costs, past due fees and charges. If within ten (10) days following such Unauthorized Equipment removal, Customer has not requested the return of its Unauthorized Equipment and paid all sums owed, then PS Lightwave may exercise all rights of ownership over such Unauthorized Equipment including the right to sell same and retain possession of any sale proceeds. Customer understands that PS Lightwave's exercise of any remedies provided for in this section shall be without prejudice to any other remedies PS Lightwave may have provided for herein or by applicable law.

d. Power Requirements. PS Lightwave provided network interface devices must be powered on and operational twenty-four (24) hours per day, seven (7) days per week. Customer warrants it is responsible for furnishing a reliable twenty-four (24) hour per day power source in capacities required for PS Lightwave provided Authorized Equipment.

7. MULTIPLE USERS. Customer acknowledges that Customer is executing

© 2026 PS Lightwave, Inc. – All Rights Reserved

Confidential & Proprietary

this Agreement on behalf of all persons who use the PS Lightwave Services through Customer's facilities. Customer shall have sole responsibility for ensuring that all such other end users understand and comply with the terms and conditions of this Agreement and any or all Services Orders. Customer further acknowledges and agrees that Customer is solely responsible and liable for any and all breaches of the terms and conditions of this Agreement, subsequent Service Orders, SLA and AUP, whether such breach is the result of use of the PS Lightwave Services by Customer or by any other end user of Customer's computers, facilities or Services.

a. **End User.** An End User is a user of Customer's Services and shall include any Customer, purchaser, lessor, employee, agent, donee, reseller or any other such person who uses PS Lightwave Services is through, as a result of, connected with or otherwise enabled because of the commercial relationship between PS Lightwave and Customer. Customer is liable for any and all End User charges, whether or not Customer receives payment or reimbursement for the same from End Users.

8. **CUSTOMER'S PREMISES.** Customer authorizes PS Lightwave, with reasonable notice where permission shall not be unreasonably withheld or delayed, and its employees, agents, contractors and representatives to enter Customer's premises to install, maintain, inspect, repair and remove Authorized Equipment, in order for PS Lightwave to perform its obligations and to exercise its privileges under this Agreement, including provision of working space and reasonable storage space, subject to Customer's reasonable and customary security, safety and environmental procedures.

a. **Access**. Subject to Customer's reasonable safety and security procedures, Customer shall provide PS Lightwave and any of PS Lightwave's authorized agents, employees, contractors and representatives all necessary Customer building access rights, facility access, appropriate space to provide, modify, cease or recover any Authorized Equipment or materials that facilitate providing Services under this Agreement. Customer shall provide, and shall ensure as reasonably as practicable, that End Users provide, all necessary and appropriate space, power and environmental conditions at any demarcation point. Customer understands that failure to allow access or provide necessary conditions as described in this Agreement may be deemed a Customer default.

9. **PAYMENT & BILLING TERMS.** Customer shall pay the fees and other charges for each Service Order.

a. **Billing**. Billing shall begin on the date PS Lightwave notifies Customer that Services are fully available for Customer's use regardless of whether Customer has procured services from third-party vendors (i.e. equipment suppliers, software developers, telecommunication Customers, etc.) required to operate the Services, and regardless of whether Customer is otherwise prepared to accept delivery of ordered Services (the Commencement Date).

b. **Pre-Payment**. Within forty-five (45) days of the date on which Customer executes a Service Order, Customer shall pay PS Lightwave all non-recurring charges designated on such Service Order as "Non-Recurring Charges" ("NRC"). At PS Lightwave's sole discretion, the NRC may be based on a schedule for payment to be specified in the terms and conditions of a Service Order.

c. **Invoicing.** PS Lightwave bills for one (1) full month of Monthly Recurring Charges ("MRC") in advance. Each MRC covers Services delivered from the first of the month through the end of the month. PS Lightwave will bill Services in arrears or as otherwise provided by the Service Order.

d. **First Invoice.** The first invoice will be sent to the Customer following the Commencement Date. The invoice will include prorated MRC from the Commencement Date to the end of the month. When multiple Services are included in a single Service Order, Customer agrees to pay PS Lightwave the MRC and any additional charges associated with those Services that are installed or activated even though the Commencement Date for the entire Service Order has not commenced. Invoices shall be delivered via email (regular mail only if Customer requests).

e. **Payment of Invoices.** All invoices are due upon receipt and become past due forty-five (45) days from the invoice date (the "Delinquency Date"). If PS Lightwave is not in receipt of any payment on or before the Delinquency Date, such payment becomes a Late Payment. At PS Lightwave's discretion, in addition to the Customer's obligation to pay such Late Payment, Customer will pay a Late Charge of $30.00 on the Late Payment and interest on the Late Payment ("Late Payment Interest") at a rate equal to 1.5% (or the highest amount permitted by law) per month or portion thereof, on the outstanding balance unpaid for more than thirty (30) days; however a minimum interest charge of $1.00 will be assessed for each billing period subject to a finance charge. In no event, however, shall the charges permitted under this Section or elsewhere in this Agreement, to the extent the same are considered to be interest under applicable law, exceed the maximum lawful interest rate. PS Lightwave shall not be prevented from exercising any of the other rights and remedies available to PS Lightwave hereunder or under any applicable laws. PS Lightwave shall have the right to suspend or terminate Services if an account is past due for more than thirty (30) days from the Delinquency Date. If PS Lightwave has to take action of any kind to collect any undisputed balance due, then Customer agrees to pay PS Lightwave's reasonable expenses, including but not limited to all reasonable and necessary attorney and collection agency fees.

f. **Taxes and Fees.** Except for taxes based on PS Lightwave's net income and ad valorem, personal and real property taxes imposed on PS Lightwave's and not Customer's owned or leased property, Customer is responsible for payment of all property, sales, use, gross receipts, excise, building access, bypass, franchise, or other local, state, and federal taxes and/or fees applicable to Customer, however designated, imposed on, or based upon the provision of the Services.

g. **Disputed Invoices.** If Customer reasonably disputes any portion of a PS Lightwave invoice, Customer must pay the undisputed portion of the invoice in accordance with the terms and conditions of this Agreement or associated Service Order and submit a written claim to PS Lightwave for the disputed amount. All claims must be submitted to PS Lightwave within ninety (90) days from the invoice date for those Services. Customer waives the right to dispute any charges not disputed within the time frame set forth above. In the event the dispute is resolved against Customer in accordance with the procedures hereunder, Customer shall pay such amounts plus interest within forty-five (45) days of receipt of notice of the determination from PS Lightwave.

h. **Credit Review and Other Assurances**. In order to support Customer's payment obligation, PS Lightwave may perform a credit review of Customer from time to time. Based on Customer's credit review and/or other information available to PS Lightwave (including any history of delinquent payments), PS Lightwave may require at any time Customer provide adequate assurances that Customer will pay all obligations as they become due. To avoid confusion, Customer understands that PS Lightwave may require Customer to provide a deposit either as a condition precedent to the beginning new Services and/or any time during existing Services.

i. **Special Construction or Acquisition.** Notwithstanding anything to the contrary in this Agreement, if PS Lightwave is required to construct or acquire telecommunications facilities from a third party, or both, in order to provide Service, the estimated charges applicable to the construction or acquisition must be approved in writing prior to PS Lightwave commencing such construction or acquisition. If Customer cancels this Agreement

© 2026 PS Lightwave, Inc. – All Rights Reserved

or any Service Order involving construction or acquisition after the acceptance of a Service Order but prior to the Commencement Date, Customer shall reimburse PS Lightwave for all unpaid costs and expenses incurred by PS Lightwave in connection with the construction or acquisition up to the time of cancellation. This payment obligation is in addition to any other rights and remedies PS Lightwave may have at law, in equity, or as provided in this Agreement.

10. TERMINATION AND/OR CANCELLATON. Termination and/or Cancellation of Services by either Party will occur without liability when one or more of the following conditions occur:
    i. if either Party violates any law, rule regulation or policy of any governmental authority related to the Services;
    ii. if either Party makes a material misrepresentation to the other in connection with the ordering or delivery of Services;
    iii. violates any provision of PS Lightwave's SLA; or
    iv. if either Party engages in any fraudulent use of Services; or if a court or other governmental authority prohibits the furnishing of any Services under this Agreement; or if either Party files bankruptcy or fails to discharge an involuntary petition within sixty (60) days.

    b. **Termination by Customer for PS Lightwave Default.** In the event Customer shall assert PS Lightwave is in default under any term or provision of this Agreement, or any applicable Service Order, Customer will give PS Lightwave written notice of such default with sufficient detail to allow PS Lightwave to attempt to cure such default. If PS Lightwave commences to cure such default within five (5) days after receipt of such notice and thereafter proceeds with the curing of such default with reasonable diligence and completes the curing of such default within thirty (30) days after receipt of such written notice, then no default on the part of PS Lightwave shall be deemed to have occurred. However, if PS Lightwave does not commence curing such default within such five (5) day period, or PS Lightwave does not thereafter proceed with the curing of such default with reasonable diligence, or if PS Lightwave does not complete the curing of such written default within thirty (30) days after PS Lightwave's receipt of such notice, then Customer may on twenty-four (24) hours written notice terminate the Service Order as to which such default relates (if such default relates to a particular Service Order), or terminate this Agreement (if such default relates to this entire Agreement). In the event of a breach of the warranties set forth herein, Customer's sole remedy is termination as described in this Section.

    c. **Termination of Services by PS Lightwave for Customer Default.** Termination of Services by PS Lightwave will occur without liability when one or more of the following conditions occur:
        i. Non-payment of any undisputed invoice amounts within sixty (60) days after receipt. A service interruption notice will be sent to the Customer in as referenced in Notices (Item 14.e.) via U.S. Mail Return Receipt Requested, electronic transmission, and/or certified mail when an invoice becomes forty-five (45) days past invoice date. Suspension of Services pursuant to this paragraph shall not relieve Customer of its obligation to pay charges during the time period in which Services are suspended. Should PS Lightwave agree to reconnect Services, Customer shall pay a reconnection fee of $300; or
        ii. If Customer fails to cure its breach of any of these terms or conditions or any Service Order, AUP or SLA within ten (10) days after written notice thereof provided by PS Lightwave; or
        iii. Failure to provide the appropriate credit report or assurances to PS Lightwave at any point during the Term of this Agreement and any subsequent Service Order, addendum, or supplement; or
        iv. Failure to allow PS Lightwave's employees, agents, representatives or contractors the necessary access as described in Section VI.A.

    d. **Effect of Termination**. Upon the effective date of termination of this Agreement:
        i. PS Lightwave will immediately cease providing the Service(s); and
        ii. Any and all payment obligations of Customer under this Agreement for Service(s) provided through the date of termination will immediately become due; and
        iii. PS Lightwave assess and collect from Customer any applicable termination charges that may be due hereunder or under an active Service Order; and
        iv. PS Lightwave pursues all other remedies available to PS Lightwave at law or in equity.

    e. **Early Termination.** PS Lightwave has established pricing under this Agreement based, in part, on Customer's promise to utilize and pay for the Services through the expiration of the entire Service Term of each Service Order. If Customer desires to terminate any Services after PS Lightwave's acceptance of the Service Order and prior to expiration of the Service Term, Customer may do so by providing written notification thereof to PS Lightwave at least thirty (30) days in advance of such termination pursuant to Item 13.e. In the event of termination of Services, Customer shall pay to PS Lightwave, prior to the effective date of such termination, an amount equal to the Termination Charge, which shall be equal to the sum of:
        i. Any NRC applicable to the terminated Services to the extent not already paid by Customer, even if previously waived; and
        ii. Any applicable early termination penalty which may be provided for in an individual Service Order.
        iii. Any termination costs payable by PS Lightwave to any third party associated with any portion of the applicable terminated Service being provided on any Third-Party Facilities; and
        iv. Any reasonable internal costs that are not otherwise recovered by PS Lightwave through the payment of the amounts set forth in (i) thru (iii) above; and
        v. All non-recurring and recurring charges that were waived or discounted by PS Lightwave. Customer agrees that PS Lightwave's damages will be impossible to ascertain if any Service is terminated and that the foregoing early termination charge establishes liquidated damages and is not a penalty.

    f. **Cancellation**
        i. Customer may change or cancel a Service Order without incurring termination liability by submitting a written change or cancellation request to PS Lightwave prior to the Commencement Date, provided Customer will reimburse PS Lightwave for any applicable charges and/any special build costs actually incurred by PS Lightwave.
        ii. Prior to the Commencement Date of Services, if Customer requests PS Lightwave change the type of Services ordered, the location of any part of the Services or to delay the Commencement Date more than thirty (30) days ("Substantive Change") or cancels a Service Order, Customer shall pay PS Lightwave's standard installation fees for such Services, any special build costs, and any provider charges associated with the changed Services; provided, however, if during the same time period, Customer submits a change order which is not a Substantive Change, Customer will only be required to reimburse PS Lightwave for any special build costs and provider charges associated with such change.

11. INDEMNITY & LIMITATIONS OF LIABILITY.
    a. Subject to the other provisions of this Agreement, and to the extent allowed by law, Customer and PS Lightwave shall defend, indemnify and hold harmless the other from and against any

© 2026 PS Lightwave, Inc. – All Rights Reserved

Confidential & Proprietary

loss, debt, liability, damage, obligation, claim, demand, judgement or settlement of any nature or kind, known or unknown, liquidated or unliquidated, of any third party, including without limitation all reasonable costs and expenses, such as reasonable litigation costs and attorneys' fees ("Claim"), relating to damage to tangible property or bodily inury, or wrongful death, to the extent such Claim arises out of the negligence or willful misconduct of the respective indemnifying party, its employees, agents or contractors in connection with the Agreement or the provision of Services hereunder. **THE PARTIES INTEND THAT THE INDEMNITY OBLIGATIONS IN THIS SECTION SHALL APPLY PROPORTIONALY EVEN IF CAUSED, IN WHOLE OR IN PART, BY THE SOLE, JOINT OR CONCURRENT NEGLIGENCE OR OTHER FAULT, WHETHER PASSIVE OR ACTIVE, OF PS LIGHTWAVE, ITS AFFILIATES, SUCCESSORS, ASSIGNS, OFFICERS, DIRECTORS, EMPLOYEES OR AGENTS.**

b. **Customer Indemnity.** Subject to the other provisions of the Agreement, and to the extent allowed by law, Customer agrees to release, defend, indemnify and hold harmless PS Lightwave, its officers, directors, employees, contractors and agents from and against any Claim to the extent such Claim (i) is brought by a downstream customer of Customer or an end user and arises out of an alleged defect in or failure of Service; or (ii) arises out of or relates to the content transmitted over PS Lightwave's network, whether sent by Customer, including without limitation, claims relating to any violation of copyright law, export control laws, or that such transmissions are libelous, slanderous or an invasion of privacy or illegal. **THE PARTIES INTEND THAT THE INDEMNITY OBLIGATIONS IN THIS SECTION SHALL APPLY PROPORTIONALY EVEN IF CAUSED, IN WHOLE OR IN PART, BY THE SOLE, JOINT OR CONCURRENT NEGLIGENCE OR OTHER FAULT, WHETHER PASSIVE OR ACTIVE, OF PS LIGHTWAVE, ITS AFFILIATES, SUCCESSORS, ASSIGNS, OFFICERS, DIRECTORS, EMPLOYEES OR AGENTS.**

c. **Damages / Causes of Action**.

i. For purposes of this Section, the term "PS Lightwave" shall be deemed to include PS Lightwave, its Affiliates, owners, directors, officers, employees, and any person or entity assisting PS Lightwave in its performance pursuant to this Agreement.

ii. NOTWITHSTANDING ANYTHING TO THE CONTRARY, THE LIABILITY OF PS LIGHTWAVE TO CUSTOMER, (A) FOR BODILY INJURY OR DEATH TO ANY PERSON OR FOR DAMAGE TO ANY REAL OR TANGIBLE PROPERTY CAUSED BY THE GROSS NEGLIGENCE OR WILLFUL MISCONDUCT OF PS LIGHTWAVE SHALL BE LIMITED TO CUSTOMER'S RIGHT TO PROVEN DIRECT DAMAGES, AND (B) FOR ALL OTHER DAMAGES OTHER THAN THOSE SET FORTH IN SUBSECTION (A) AND NOT OTHERWISE EXCLUDED OR LIMITED BY THIS AGREEMENT, SHALL, IF PS LIGHTWAVE IS JUDICIALLY DETERMINED TO HAVE SOME LIABILITY TO CUSTOMER, FOR WHATEVER REASON, ARISING UNDER OR RELATED TO ACTS OR OMISSIONS RELATED TO THIS AGREEMENT, IN THE AGGREGATE FOR ALL SUCH ACTS OR OMISSIONS, BE LIMITED TO AN AMOUNT EQUAL TO THE RECURRING CHARGES UNDER THIS AGREEMENT FOR THE FIRST SIX (6) MONTHS OF THE TERM HEREOF.

iii. NOTWITHSTANDING ANYTHING TO THE CONTRARY, PS LIGHTWAVE SHALL NOT BE LIABLE FOR ANY DAMAGES SUFFERED BY CUSTOMER OR ANY END USER ARISING FROM OR RELATED TO ANY FORCE MAJEURE EVENT.

iv. NOTWITHSTANDING ANY OTHER PROVISION OF THIS AGREEMENT TO THE CONTRARY, AND TO THE EXTENT ALLOWED BY LAW, IN NO EVENT SHALL CUSTOMER OR PS LIGHTWAVE OR THEIR RESPECTIVE AFFILIATES BE LIABLE TO EACH OTHER FOR ANY INDIRECT, SPECIAL, PUNITIVE, EXEMPLARY, INCIDENTAL OR CONSEQUENTIAL LOSS OR DAMAGE (OTHER THAN SUCH DAMAGES AS MAY BE INCLUDED AS A COMPONENT OF LIQUIDATED DAMAGES OR TERMINATION CHARGES UNDER THIS AGREEMENT) SUFFERED BY SUCH OTHER PARTY AS A RESULT OF THE PERFORMANCE OR NONPERFORMANCE OF ITS OBLIGATIONS UNDER THIS AGREEMENT, OR ITS ACTS OR OMISSIONS RELATED TO THIS AGREEMENT WHETHER OR NOT ARISING FROM SOLE, JOINT OR CONCURRENT NEGLIGENCE, STRICT LIABILITY, VIOLATION OF LAW, BREACH OF CONTRACT, BREACH OF INDEMNITY PROVISIONS, BREACH OF WARRANTY OR ANY OTHER THEORY OR SOURCE, WHETHER OR NOT FORESEEABLE AND EVEN IF THE PARTIES HAVE BEEN ADVISED OF THE POSSIBILITY OF SUCH DAMAGES INCLUDING, BUT NOT LIMITED TO, LOSS OF PROFITS OR REVENUE, AND EACH PARTY HEREBY RELEASES THE OTHER PARTY THEREFROM. IN ADDITION, PS LIGHTWAVE SHALL NOT BE LIABLE FOR ANY DAMAGES ARISING OUT OF OR RELATING TO: INTEROPERABILITY, ACCESS OR INTERCONNECTION PROBLEMS WITH APPLICATIONS, AUTHORIZED EQUIPMENT, SERVICES, CONTENT OR NETWORKS NOT PROVIDED BY PS LIGHTWAVE; SERVICE INTERRUPTIONS OR LOST OR ALTERED MESSAGES OR TRANSMISSIONS (EXCEPT TO THE EXTENT OF SERVICE CREDIT ALLOWANCES SPECIFIED IN THE RELEVANT PRODUCT SUPPLEMENT) OR UNAUTHORIZED ACCESS TO OR THEFT, ALTERATION, LOSS OR DESTRUCTION OF CUSTOMER'S OR ANY THIRD PARTY'S APPLICATIONS, CONTENT, DATA, PROGRAMS, INFORMATION, NETWORK OR SYSTEMS.

v. THE INDEMNIFIED PARTY SHALL PROMPTLY NOTIFY THE INDEMNIFYING PARTY IN WRITING OF ANY CLAIMS WHICH ARE SUBJECT TO THE TERMS OF THIS SECTION. THE INDEMNIFIED PARTY SHALL HAVE THE RIGHT AT ITS OWN EXPENSE TO APPOINT ITS OWN COUNSEL WHO SHALL BE ENTITLED TO PARTICIPATE IN ANY SETTLEMENT NEGOTIATIONS OR LITIGATION REGARDING ANY MATTER FOR WHICH IT IS ENTITLED TO BE INDEMNIFIED HEREUNDER. THE INDEMNIFYINIG PARTY SHALL NOT AGREE TO ANY SETTLEMENT OR CONSENT TO ANY DECREE, ORDER OR JUDGMENT WITHOUT OBTAIINING THE CONSENT OF THE INDEMNIFIED PARTY, WHICH CONSENT SHALL NOT BE UNREASONABLY WITHHELD.

d. **Service Credits.** Customer's sole remedy for any failure of Service is the right to receive service outage credits, if applicable and as set forth in PS Lightwave's Service Level Agreement ("SLA") which can be viewed at www.pslightwave.com.

e. **Limitation of Representations and Warranties**. EXCEPT AS EXPRESSLY SET FORTH IN THIS AGREEMENT, PS LIGHTWAVE MAKES NO WARRANTY TO CUSTOMER OR ANY OTHER PERSON OR ENTITY, WHETHER EXPRESS, IMPLIED, OR STATUTORY, AS TO THE DESCRIPTION, QUALITY, MERCHANTABILITY, INFRINGEMENT, TITLE, COMPLETENESS OR FITNESS FOR ANY PARTICULAR PURPOSE OF ANY SERVICES PROVIDED OR NOT PROVIDED HEREUNDER OR DESCRIBED HEREIN, OR AS TO ANY OTHER MATTER, ALL OF WHICH WARRANTIES BY PS LIGHTWAVE ARE HEREBY EXCLUDED AND DISCLAIMED. CUSTOMER AGREES THAT PS LIGHTWAVE DOES NOT MONITOR, EXERCISE CONTROL OVER, NOR ACCEPT RESPONSIBILITY FOR THE CONTENT OF THE INFORMATION PASSING THROUGH OR CONTAINED WITHIN PS LIGHTWAVE'S FACILITIES, HOST COMPUTERS, NETWORK HUBS AND POINTS OF PRESENCE (THE "PS LIGHTWAVE NETWORK") OR THE INTERNET, OR THE CONTENT OF THE INFORMATION RESIDING ON THE CUSTOMER'S EQUIPMENT OR TRANSMITTED OVER ITS NETWORK, AND IS NOT LIABLE FOR THE CONTENT OF ANY DATA TRANSFERRED EITHER TO OR FROM THE CUSTOMER OR STORED BY CUSTOMER OR ANY OF CUSTOMER'S CLIENTS VIA THE SERVICES PROVIDED BY PS LIGHTWAVE. CUSTOMERS SHALL INDEMNIFY AND HOLD PS LIGHTWAVE HARMLESS FOR ANY CLAIMS, LOSSES OR DAMAGES ARISING OUT OF OR

© 2026 PS Lightwave, Inc. – All Rights Reserved

RELATED TO CUSTOMER'S CONTENT OR USE OF ANY INFORMATION RESIDING ON CUSTOMER'S EQUIPMENT OR TRANSMITTED OVER ITS NETWORK. USE OF ANY INFORMATION OBTAINED VIA PS LIGHTWAVE'S SERVICES IS AT CUSTOMER'S OWN RISK. PS LIGHTWAVE SPECIFICALLY DENIES ANY RESPONSIBILITY FOR THE ACCURACY OR QUALITY OF INFORMATION OBTAINED THROUGH ITS SERVICES. IN THE EVENT THAT PS LIGHTWAVE PROVIDES CUSTOMER WITH PRODUCTS IN CONJUNCTION WITH THE SERVICES (I.E., THIRD PARTY SOFTWARE PRODUCTS OR EQUIPMENT), PS LIGHTWAVE ALSO PROVIDES SUCH PRODUCTS AS IS WITHOUT WARRANTY OF ANY KIND, WHETHER EXPRESS, OR IMPLIED.

f. **Survival and Duration**. These indemnification provisions and obligations shall survive this Agreement and as set forth, represent the entire liability of PS Lightwave and Customer's sole and exclusive remedies, with respect to any claim subject to indemnification under this Agreement.

12. NETWORK DISRUPTIONS & SECURITY

a. PS Lightwave shall have no liability whatsoever for any damage to or loss or destruction of any of Customer's hardware, software, files, data or peripherals caused by network disruptions. The installation, use, inspection, maintenance, repair and removal of the Authorized Equipment may result in network disruptions, service outages or potential damage to Customer's network operations. Customer therefore agrees to take reasonable precautions during use of the Services. In the event of an emergency, PS Lightwave has the right to perform maintenance and/or restoration of its facilities, including but not limited to actions required to restore continuity to a severed or partially severed fiber optic cable, restore dysfunctional power and ancillary support Authorized Equipment, or correction of any potential jeopardy conditions. PS Lightwave shall notify Customer as soon as is reasonably practicable of any further disruptions to Services related to the emergency event.

b. PS Lightwave shall not be liable for any third-party network breaches on Customer's premises, equipment, software or hardware. Customer assumes the risk of any unauthorized third-party access to Customer's network. PS Lightwave makes an effort to keep its network secure but no network is perfect. Customer should take whatever steps it deems necessary to ensure its data is not accessed by unauthorized third parties.

13. **INSURANCE.** To insure against all risks of loss and damage from the Commencement Date, Customer agrees to maintain in force throughout the term of this Agreement, at its own expense, Employer's Liability insurance and Commercial-General Liability in an amount not less $1,000,000 as required for operations under this Agreement. Upon request, Customer shall provide PS Lightwave a certificate of insurance that evidences the minimum levels of required insurance and includes and/or names PS Lightwave as an additional insured.

14. GENERAL TERMS

a. **Assignment**. This Agreement shall be binding upon and inure to the benefit of Customer, PS Lightwave and their respective Affiliates, successors, assigns, officers, directors, employees and agents. Customer may not assign this Agreement or any of its rights or responsibilities hereunder without the advance written consent of PS Lightwave, and any attempt by Customer to do so shall be void and of no effect. Consent shall not be unreasonably withheld; however, Assignee of Customer may be required to complete and be approved as credit worthy prior to PS Lightwave's acceptance of assignment and shall agree in writing to accept all the terms and conditions here, without exception. PS Lightwave's rights and obligations under this Agreement may be assigned to any business entity, which succeeds to ownership or operation of the PS Lightwave Services. Notwithstanding the above, either party may assign this Agreement and any of its rights or obligations hereunder to any Affiliate or to any Person, including but not limited to, any entity which acquires the business or assets of Customer to which this Agreement relates, whether by merger, purchase or otherwise, but the other party to this Agreement is not bound by any assignment until such party has received written notice of such assignment signed by both the assignor and the assignee.

b. **Severability**. If any provision of this Agreement shall be held by a court of competent jurisdiction to be invalid, unenforceable, or void, the remainder of this Agreement shall remain in full force and effect.

c. **Force Majeure.** Neither party shall be liable to the other or in default of this Agreement, nor shall any credit allowance or other remedy be extended, for any failure of performance or Authorized Equipment due to causes beyond such party's reasonable control including but not limited to any catastrophic event, earthquakes or other Acts of God, wars, civil disturbances, revolts, sabotage, theft, vandalism, transportation disasters, explosions, fire, acts or omissions of suppliers, fiber/cable cut, equipment or power failure, rodent damage, flood, any law, order or regulations or requests of any governmental entity, national emergency, terrorist activities, insurrections, riots, any acts or restraints of government or any regulatory authority, work stoppages or disruptive labor activities, global or natural disasters or like events, lack or delay in transportation, or failure of a third party to grant or recognize a right beyond the reasonable control of the party delayed. Both parties shall be excused from such performance to the extent, *but only to the extent,* that it is prevented, hindered or delayed by such causes. Upon the occurrence of any of such events, the party whose performance is prevented, interrupted, hindered or delayed shall give prompt notice to the other party, updating such notice at regular intervals regarding such event and the effect thereof, and use reasonable efforts to continue performance notwithstanding such cause. Financial inability to perform shall never be deemed a force majeure event unless it is caused by a moratorium on banking operations.

d. **No Waiver**. No failure by either party to enforce any rights hereunder shall constitute a waiver of such right(s).

e. **Notices.** Notices hereunder shall be deemed properly given when delivered. If delivered in person, or when sent via facsimile, overnight courier, electronic mail or when deposited with the U.S. Postal Service. Customer shall notify PS Lightwave of any changes to its address listed on any Service Order.

If to PS Lightwave:
5959 Corporate Drive, Suite 3300
Houston, Texas 77036
832.615.8000
FAX: 713.510.1650
Attn: Legal Group
legalgroup@pslightwave.com

If to Customer:
Name: San Jacinto River Authority
Address: 1577 Dam Site Rd.
Conroe, TX 77304
Contact: Randy Petersen
Phone: 936.588.3111
EMAIL: rpetersen@sjra.net

For Service Discontinuation, Carrier must submit a Disconnect Request Form to discontinue a Service by sending the completed form to support@pslightwave.com or to PS Lightwave at the address indicated above, or such other address as PS Lightwave may specify from time-to-time.

© 2026 PS Lightwave, Inc. – All Rights Reserved

f. **Acceptable Use Policy ("AUP")**. Customer's use of Services shall at all times comply with PS Lightwave's then-current AUP as amended by PS Lightwave from time to time and which is available through PS Lightwave's website at www.pslightwave.com. Violation of federal or state laws or regulations or failure of Customer to comply with the AUP shall be grounds for immediate termination of Services. Termination for violation of the AUP shall in no event release Customer from the obligation to pay all amounts due and payable hereunder. Upon termination for violation of the AUP, any and all of Customer's payment obligations become immediately due.

g. **Entire Agreement**. This Agreement and the attached and incorporated Service Orders, Change Orders, Exhibits, if any, contain the entire Agreement of the parties and there are no representations, inducements, promises, agreements, arrangements or undertakings, oral or written, between the parties to this Agreement other than those set forth in this Agreement and duly executed in writing, and supersedes all previous representations, understandings or agreements. No modification of this Agreement may be made except in writing signed by both parties.

h. **Governing Law**. The validity, interpretation, enforceability and performance of this Agreement shall be governed by and construed in accordance with the laws of the State of Texas.

i. **Jurisdiction & Venue.** ALL PARTIES HEREBY SUBMIT TO THE EXCLUSIVE JURSIDICTION OF THE STATE DISTRICT COURT OF HARRIS COUNTY, TEXAS AND HEREBY AGREE THAT ANY SUCH COURT AND ONLY SUCH COURT SHALL BE THE PROPER FORUM AND VENUE FOR THE DETERMINATION OF ANY DISPUTE ARISING HEREUNDER. EACH PARTY WAIVES ALL DEFENSES OF EACH OF PERSONAL JURISDICTION AND FORUM NON CONVENIENS. PROCESS MAY BE SERVED ON EITHER PARTY IN THE MANNER AUTHORIZED BY APPLICABLE LAW OR COURT RULE.

j. **Consent to Electronic Contracting.** By entering into this Agreement, the Parties consent during term of this Agreement:
   (i) to conduct this transaction and enter into Service Orders, SLAs, billing and other agreements electronically;
   (ii) to use electronic signature and records in connection with this Agreement, any amendment of this Agreement and any Service Order or other document issued under this Agreement; and
   (iii) to receive electronic mail and other electronic communications with respect to any document or transaction relating to or regarding this Agreement and the Services PS Lightwave provides to Customer, including any Service Order, invoice, billing, notice, certificate, consent or record.

   The Parties may provide documents to each other electronically by emails that include attachments or embedded links. The delivery of any Party to the other of an electronic signature to this Agreement or any notice hereunder, shall have the same effect as the delivery of an original signature.

15. WAIVER OF JURY TRIAL & ATTORNEYS' FEES.
   a. **Waiver of Jury Trial.** Each Party hereby irrevocably waives its rights to trial by jury in any action or proceeding arising out of this Agreement or the transactions relating to its subject matter.
   b. **Attorney's Fees.** The Parties agree that if either Party to the Agreement brings any civil action related in any manner to the Agreement, the prevailing party in such civil action shall recover all of its reasonable attorneys' fees and litigation expenses incurred from the non-prevailing Party.

16. **REGULATIONS.** The Parties agree that in the event of a decision by a telecommunications regulatory authority at the federal, state or local level necessitates material modifications in this Agreement, the Parties will negotiate in good faith to modify this Agreement in light of such decision. Customer warrants that the traffic which Customer places on each Service will have no more than ten percent (10%) interstate traffic component. Upon request, Customer will make its record available to PS Lightwave for inspection and verification of such warranty.

17. **DISPUTE RESOLUTION.** Except under circumstances requiring immediate injunctive relief, any dispute, controversy or claim arising out of or relating to the Agreement, the Parties' performance under it, or its breach ("Dispute") shall, upon the written request of either Party, be dealt with in accordance with the dispute resolution process before resorting to litigation.
   a. **Executive-Level Negotiations**. If any Dispute is not resolved promptly in the ordinary course of business, either Party may request to resolve such Dispute through face-to-face executive level negotiations, as provided herein, before resorting to litigation. Any such executive level negotiations shall be initiated within five (5) business days (or such other period as the Parties shall otherwise agree) of the date of written notice from the requesting Party to the other Party of the Dispute ("Negotiation Notice"), which Negotiation Notice shall be delivered to the other Party in accordance with the notice section of the applicable, disputed Service Order, and shall: (i) outline the allegations that form the basis of any anticipated compliant; (ii) invite a written response within a reasonable period of time; and (iii) request to initiate to executive level negotiations within the aforementioned five (5) day time period. All executive Level negotiations shall be conducted by a management representative of each Party with authority to settle the Dispute. Either Party may elect, upon two (2) business days written notice to the other Party, to bring its legal counsel to such executive level negotiations. The location, form, frequency, duration and conclusion of the executive level negotiations will be at the discretion of the Parties' representatives; provided, however, that either Party shall be entitled to terminate executive level negotiations at any time.
   b. **Non-Binding Mediation.** If the Parties do not resolve the Dispute in accordance with the negotiation process set forth above, the Dispute must be submitted to non-binding mediation before an independent mediator, who shall be mutually designated and agreed upon by the Parties. All costs associated with non-binding mediation shall be borne equally by the Parties.
   c. **Settlement.** Completion of Dispute Resolution Process. All matters resolved pursuant to this Section shall be documented through the Parties' execution of a written settlement agreement. The Parties agree that the refusal or failure of either Party to participate in executive levels discussions, as described herein, or to otherwise engage in good faith informal dispute resolution efforts, including but not limited to non-binding mediation above, shall constitute an unjust and unreasonable practice. In the event any Dispute is not resolved through the dispute resolution process set forth herein, either Party may seek any legal remedies to which it may be entitled before any Harris County State District Court.
   d. **Effect of Dispute Resolution.** All conferences, discussions and correspondence that occur in connection with the dispute resolution procedures conducted shall be deemed settlement discussions, and nothing said or disclosed, nor any document produced, which is not otherwise independently discoverable, shall be offered or received as evidence, or used for impeachment or for any other purpose, in any current or future litigation. Unless otherwise agreed, each Party shall bear its own costs and expenses, including attorneys' fees, incurred in connection with the dispute resolution process, except that the expenses and fees for independent mediation services, and for

© 2026 PS Lightwave, Inc. – All Rights Reserved

any independent facilities used for mediation, if any, shall be shared equally between the Parties.

18. CONFIDENTIALITY.
    a. If PS Lightwave and Customer have executed a Confidentiality and Non-Disclosure Agreement or similar agreement, the Parties agree that the terms therein shall apply to any disclosure made hereunder and remain in full effect throughout the term of the Agreement. If no such agreement is in effect, Customer and PS Lightwave agree to maintain in strict confidence all technology, research and development, business affairs, pricing, trade secrets, and other proprietary information of the other party disclosed under the Agreement. No obligation of confidentiality shall apply to disclosed information that is in the public domain (through no violation of this Section by recipient) that the recipient: (1) already possesses at the time of disclosure without obligation of confidentiality; (ii) develops independently; or (iii) rightfully receives without obligation or confidentiality from a third party. The Parties' obligations under this Section shall survive expiration or termination of the Agreement.
    b. If the recipient is required by law, rule, regulation or court order to disclose any confidential information, the recipient will promptly notify the disclosing party in writing prior to making any such disclosure in order to facilitate the disclosing party seeking a protective order or other appropriate remedy from the appropriate body. The recipient agrees to cooperate with the disclosing party in seeking such order or other remedy. The recipient further agrees that if the disclosing party is not successful in precluding the requesting legal body from requiring the disclosure of the confidential information, it will furnish only that portion of the confidential information which is legally required and will exercise all reasonable efforts to obtain reliable assurances that confidential treatment will be accorded the confidential information.
    c. Neither party shall use the other's name in publicity or press releases without obtaining the other's prior written approval.

19. CONSTRUCTION OF AGREEMENT. By execution of this Agreement, the Parties acknowledge that they have read and understood each provision, term and obligation contained in this Agreement. This Agreement, although drawn by one Party, shall be constructed fairly and reasonably and not more strictly against the drafting party than the non-drafting Party. Customer acknowledges and understands that it has had the opportunity to review this agreement with independent counsel and enters into this agreement with full knowledge and understanding of its terms and conditions.

20. HIRING PROHIBITION. During the term of this Agreement, the Customer or any of its affiliates will not, directly, or indirectly, for their own account or for or on behalf of any other person or entity, whether as an officer, director, employee, partner, principal, joint venture, consultant, investor, shareholder, independent contractor or otherwise, hire or employ, or attempt to hire or employ, in any fashion (whether as an employee, independent contractor or otherwise), any employee or independent contractor of PS Lightwave, or solicit or induce, or attempt to solicit or induce or take away, any of PS Lightwave's employees, consultants, clients, Customers, vendors, suppliers, or independent contractors to terminate their relationship with PS Lightwave or the other party.

CUSTOMER REPRESENTS AND WARRANTS THAT CUSTOMER HAS FULL AUTHORITY TO ENTER INTO THIS AGREMEENT. BY SIGNING THIS AGREEMENT CUSTOMER ACKNOWLEDGES AND REPRESENTS THAT PRIOR TO ITS EXECUTION IT HAS FULLY READ AND UNDERSTANDS (a) THIS AGREEMENT, (b) THE DEFINITIONS AND GENERAL TERMS DEFINED HEREIN, (c) ANY OTHER REFERENCED SCHEDULES, EXHIBITS, ATTACHMENTS AND/OR SERVICE ORDERS EXECUTED IN CONJUNCTION HEREWITH OR PURSUANT TO THE TERMS HEREOF AND AGREES THAT THE DEFINITIONS AND GENERAL TERMS, THE APPLICABLE PRODUCT SUPPLEMENTS, SERVICE ORDERS AND ANY OTHER DOCUMENTS REFERRED TO AND INCORPORATED INTO THIS AGREEMENT ARE A PART OF THIS AGREEMENT AS IF SET FORTH HEREIN IN THEIR ENTIRETY. EXECUTION HEREOF BY THE PARTIES CONSTITUTES AN AGREEMENT AND ACKNOWLEDGMENT THAT THE RELEASE, INDEMNIFICATION, AND LIMITATION OF LIABILITY PROVISIONS CONTAINED IN THIS AGREEMENT COMPLY WITH THE EXPRESS NEGLIGENCE RULE AND ARE CONSPICUOUS.

AGREED TO AND ACCEPTED
SAN JACINTO RIVER AUTHORITY

By: Date
Title:

AGREED TO AND ACCEPTED
PS LIGHTWAVE, INC.

By: Rhonda Cook Date
CEO

© 2026 PS Lightwave, Inc. – All Rights Reserved

SJRA
SAN JACINTO RIVER AUTHORITY

Board Communication

Item No.	Agenda Item	Date
6.9	Consider authorizing the General Manager to execute the initial term of a General Services Agreement with Integrity Pipeline Services, Inc., to provide Lake Conroe Dam Relief Wells Maintenance Services for the Lake Conroe Division.	**10/22/2026**

BACKGROUND INFORMATION

Firm Name:	Integrity Pipeline Services, Inc.
Type of Agreement:	Initial Term - General Services Agreement
Service:	Lake Conroe Dam Relief Wells Maintenance Services
Contract Number:	27-0021
Initial Contract Term Amount:	$145,000.00 (November 1, 2026 – August 31, 2027)

The Lake Conroe Dam includes 20 artesian relief wells located along the southwestern toe of the dam. These wells provide hydrostatic pressure relief for water movement beneath the dam. The wells were installed during original dam construction in 1974. In 2018, SJRA completed a project to clean, inspect, and rehabilitate all 20 wells to improve well performance. Going forward, SJRA's Dam Safety Engineer recommended SJRA complete rehabilitation of the wells every 5 years.

Rehabilitation of the first 8 wells was completed in Fiscal Years 2025 and 2026. The General Services Agreement starting in Fiscal Year 2027 will allow for rehabilitation of 6 wells per year in Fiscal Years 2027 and 2028, for a total of 12 wells. Well maintenance includes pre-inspection, mechanical cleaning and waste disposal, post inspection, and site restoration.

FUNDING SOURCE: R&R Funds

ATTACHMENTS: Map, General Services Agreement, Proposal

RECOMMENDED ACTION

Authorize the General Manager to execute the initial term of a General Services Agreement with Integrity Pipeline Services, Inc., in an amount not to exceed $145,000.00, to provide Lake Conroe Dam Relief Wells Maintenance Services for the Lake Conroe Division. Sufficient funds were budgeted and are available in Fiscal Year 2027 for this purpose.

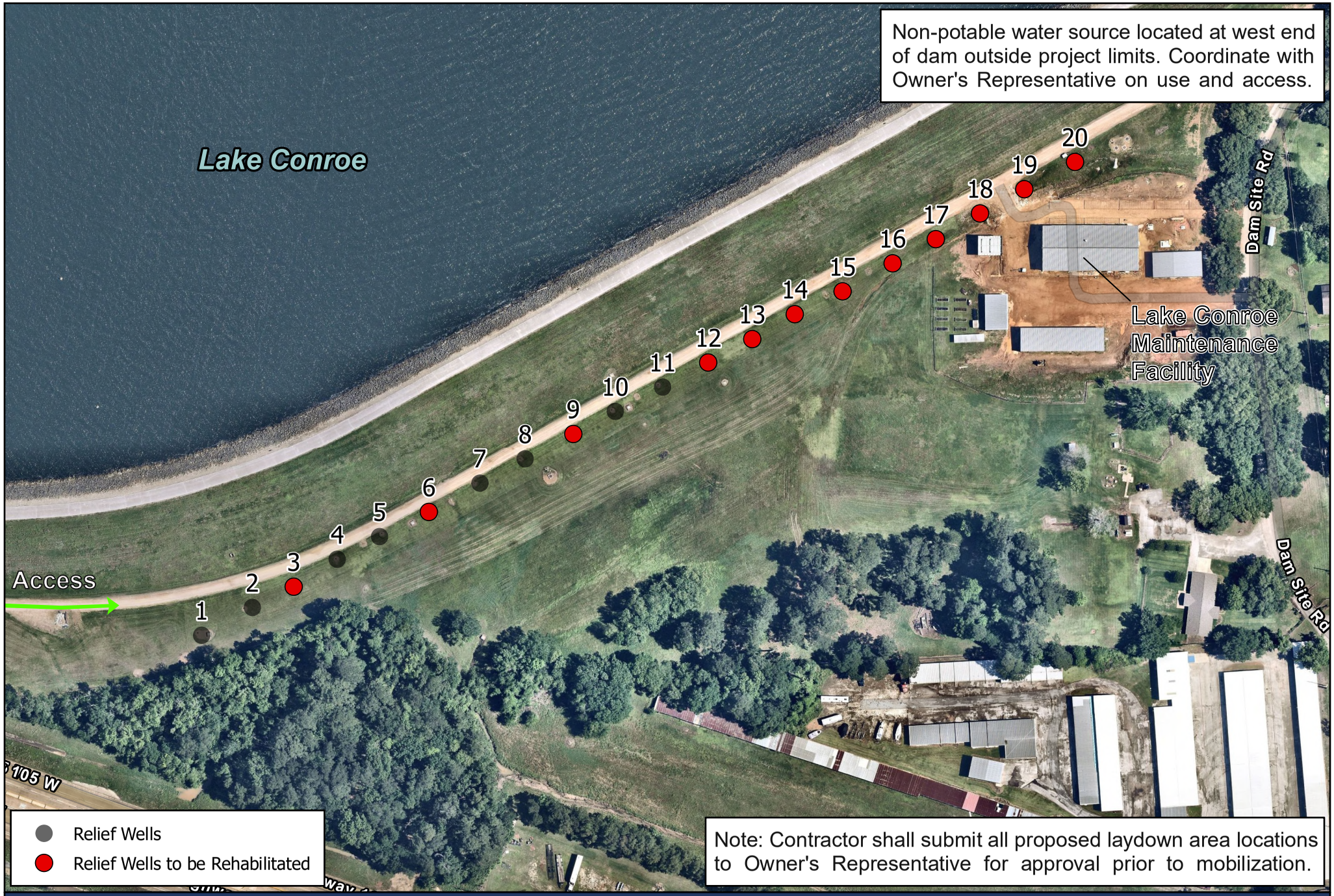

Lake Conroe Dam
Relief Wells Maintenance

0 100 200 Feet

N

SJRA
SAN JACINTO RIVER AUTHORITY

Document Date: 9/30/2026 9:50 AM

Document Location: B:\Requests\LakeConroe\D.Sidney\LC Dam Relief Wells Rehab\LC Dam Relief Wells Rehab.aprx

SJRA
SAN JACINTO RIVER AUTHORITY

STANDARD FORM OF AGREEMENT

GENERAL SERVICES

CONTRACT # 27-0021

LAKE CONROE DAM RELIEF WELLS ANNUAL MAINTENANCE SERVICES

Procurement Department
1577 Dam Site Road
Conroe, Texas 77304

GENERAL SERVICES AGREEMENT
Contract #27-0021

Project: Lake Conroe Dam Relief Wells Annual Maintenance Services

Project Location: Lake Conroe, 1577 Dam Site Rd, Conroe, TX 77304

THE PARTIES

The SJRA: The SAN JACINTO RIVER AUTHORITY

- *Lake Conroe Division - PO Box 329, Conroe, TX 77305 936-588-1111*

(Contact Person / Phone / e-mail) Grady Garrow / 936 588 7181 /ggarrow@sjra.net

and

Contractor: Integrity Pipeline Services, Inc.

(Address for Written Notice) 2210 North Sacramento Street, Pearland, TX 77581

(Contact Person / Phone / email) Justin Brantley / 281 997 1585 / justin.brantley@integrityservicesgroup.com

The SJRA and the Contractor may be referred to herein individually as a “Party” and together as the “Parties”.

FOR THE MUTUAL PROMISES SET OUT HEREIN THE PARTIES AGREE AS FOLLOWS:

TICLE 1
WORK OF THE CONTRACT

1.1 Contractor shall perform the Work and provide the Goods in accordance with the terms of this Agreement and any and all Exhibits attached hereto and the documents enumerated in Paragraph 7.1 below, all of which documents are incorporated herein (collectively the “Contract Documents”). Contractor shall provide all labor, materials, equipment, services, supervision, tools, facilities, utilities, and other items necessary for the proper and timely performance and completion of the following generally described work (herein the "Work") and supply of the following generally described goods (herein the "Goods"), in strict accordance with the terms of the Contract Documents and as reasonably inferable from the Contract Documents as necessary for such Work to be complete and serviceable and such Goods to be fully and finally supplied:

Perform services related to Lake Conroe Dam Relief Wells Annual Maintenance Services as requested.

1.2 Changes in the Work and changes with respect to the supply of the Goods may be accomplished after execution of this Agreement, and without invalidating this Agreement, by Amendment. A “Amendment” is a written instrument prepared by SJRA and signed by SJRA and Contractor, stating their agreement upon all of

the following: (1) the change in the Work; (2) the amount of the adjustment, if any, in the Contract Price; and (3) the extent of the adjustment, if any, in the Contract Time. All changes in the Work shall be performed under applicable provisions of the Contract Documents, and the Contractor shall proceed promptly, unless otherwise provided in the Amendment. A field directive or field order, or any other order, direction, instruction, clarification, information or request by SJRA or any of its consultants, or any other representative of SJRA, shall not be recognized as having any effect upon the Contract Price or the Contract Time, unless documented as an Amendment, and Contractor shall not have any claim for adjustment of the Contract Price or the Contract Time as a result thereof, unless Contractor shall, prior to complying therewith and in no event later than five (5) days from the date such directive, order, etc. was given, submit a written claim therefor.

1.3 Contractor shall obtain and pay for all construction permits, licenses and fees (as legally required) for prosecution of the Work and supply of the Goods, except as otherwise provided in the Contract Documents.

ARTICLE 2
PERIOD OF SERVICE

2.1 This Agreement shall become effective upon execution of this Agreement by SJRA and the Contractor and shall remain in effect for an initial term of one (1) year with an automatic renewal for one (1) additional one (1) year term for a total of two (2) years unless terminated earlier in writing in accordance herein. Any renewal must be in writing and executed by both the Parties. At the sole option of SJRA, the Agreement may be further extended as an emergency extension, on a month-to-month basis. The Work to be undertaken and/or the supply of Goods pursuant to this Agreement will be required to commence within fourteen (14) days of delivery of a notice to proceed, or issuance of a SJRA Purchase Order. **TIME IS OF THE ESSENCE IN THIS AGREEMENT**. The Contractor shall make all reasonable efforts to complete the Work and the supply of the Goods as expeditiously as possible and to meet the schedule established by the Parties. The Work and the supply of the Goods shall be accomplished per the scope of services as identified in the Contract Documents

ARTICLE 3
CONTRACT PRICE

3.1 The maximum, not-to-exceed compensation payable to Contractor under this Contract within the initial year, is **$145,000** SJRA will not pay Contractor any amount in excess of the not-to-exceed compensation of this Contract for completing the Work and will not pay for Work performed before the date this Contract becomes effective or after the termination of this Contract. If the maximum compensation is increased by amendment of this Contract, the amendment must be fully effective before Contractor performs Work subject to the amendment.

The SJRA will pay Contractor in current funds for Contractor's completion of the Work and supply of the Goods, in accordance with the Contract Documents, the Contract Price as follows:

[*Check the applicable box*]

[__] Lump sum price of $_____
The lump sum Contract Price includes the following Allowance items:
Description Allowance Amount

$_____

Whenever costs are more than or less than Allowances, the Contract Price shall be adjusted accordingly by Amendment. The amount of the Amendment shall reflect the difference between actual costs and the Allowance Amount. Contractor may not exceed any Allowance Amount without SJRA's prior approval by execution of a Amendment.

Contractor's Proposal for the Work, allocating the Contract Price among the various portions of the Work and to be used in calculating progress payments for the Work, is attached hereto as **Exhibit A**.

[__] Unit prices for actual quantities of Work performed, based upon the Contractor's Proposal attached hereto as **Exhibit A,** and delivery tickets, field measurements, or other documentation acceptable to SJRA as satisfactory evidence of actual quantities of Work performed. Unit prices include all Contractor costs, overhead and profit for the Work.

The unit prices are based upon the estimated quantities stated in the Contractor's Proposal. If quantities of Work actually performed are less or more than the quantities stated in the Contractor's Proposal by twenty percent (20%) or more, whether as a result of inaccurate estimated quantities or changes in the Work requested by SJRA, and if as a result of any such reduction in quantity Contractor demonstrates to SJRA's satisfaction that Contractor is unable to recover its fixed costs of the Work, or if as a result of any such increase in quantity Contractor's costs of the Work are reduced by subcontractor or supplier rate or price reductions or discounts, economies of scale, or otherwise, the applicable unit prices shall be equitably adjusted by Amendment.

[__] Time & Material Rates for actual quantities of Work performed based upon the Contractor's Proposal attached hereto as **Exhibit A,** and time sheets, payroll records, delivery tickets, or other documentation acceptable to SJRA of actual quantities of Work performed. Time & Material Rates include all Contractor costs, overhead and profit for the Work.

[__] Time & Material Rates for actual quantities of Work performed based upon the Contractor's Proposal attached hereto as **Exhibit A,** and time sheets, payroll records, delivery tickets, or other documentation acceptable to SJRA of actual quantities of Work Performed, up to a Not To Exceed Price of $_____. Time & Material Rates and the Not To Exceed Price include all Contractor costs, overhead and profit for the Work. Any and all costs of the Work in excess of the Not To Exceed Price shall be borne by Contractor.

3.2 Contractor shall pay only, and Contractor warrants and represents that the Contract Price includes only, those sales, consumer, use and other similar taxes required to be paid by Contractor in accordance with the laws and regulations of the State of Texas in the performance of this public works contract. SJRA is a political subdivision of the State of Texas and exempt from the payment of state and local sales, use and excise taxes.

3.3 Non-Appropriation: All funds for payment by SJRA under this Agreement are subject to the availability of an annual appropriation for this purpose by SJRA. In the event of non-appropriation of funds by the Board of Directors of SJRA for the services provided under the Agreement, SJRA will terminate the Agreement, without termination charge or other liability, on the last day of the then-current fiscal year or when the appropriation made for the then-current year for the services covered by this Agreement is spent, whichever event occurs first (the "Non-Appropriation Date"). If at any time funds are not appropriated for the continuance of this Agreement, cancellation shall be accepted by the Contractor on thirty (30) days prior written notice, but failure to give such notice shall be of no effect and SJRA shall not be obligated under this Agreement beyond the Non-Appropriation Date.

ARTICLE 4
PAYMENT PROCEDURES

4.1 Contractor shall submit no more than one (1) invoice per month, in a form acceptable to SJRA and including supporting documentation requested by SJRA, requesting payment for Work performed in

accordance with the requirements of the Contract Documents during the prior month. The SJRA will make payments in compliance with the Texas “prompt payment law” which provides that payments owed by SJRA for the Goods and Work are due no later than 45 days after the Goods are received by SJRA, the Work is completed, or an invoice for the Goods or Work is received, whichever is later, unless there is a bona fide dispute between SJRA and Contractor about the Goods delivered or the Work performed that causes the payment to be late, or the terms of a federal contract, grant, regulation, or statute prevent SJRA from making a timely payment with federal funds, or the invoice is not mailed to the person to whom it is addressed in strict accordance with any instruction on the Purchase Order relating to the payment. (Ref Chapter 2251 of Texas Gov. Code). SJRA shall notify Contractor in writing of a disputed amount in an invoice within twenty-one (21) days of receipt. Such notice shall include a detailed statement of the amount of the invoice which is disputed.

Unless otherwise requested by SJRA, invoices shall be (a) delivered electronically to ap@sjra.net with a copy to [Construction Manager via email], and (b) rendered separately for each Purchase Order and not cover more than one Purchase Order. All invoices must be itemized. Invoices must be fully documented as to labor materials, and equipment provided.

Each invoice shall include:

- Contractor's name, address and telephone number
- An invoice date and number
- SJRA Purchase Order number
- Contract number
- Line items total
- Total cost of repair or reconditioning at or below the not-to-exceed price on accepted Proposal.
- Amounts previously paid on such Purchase Order, if any.
- Seller’s “remit to” address
- Freight or Additional supporting documentation of third party charges, if applicable

Each invoice line should include:

- A full description of the material/service ordered, and the SJRA part number if provided on the Purchase Order.
- Quantities ordered, quantities delivered, unit prices and extended prices if applicable.
- Date(s) of services/delivery
- If the Purchase Order has multiple lines, the invoice lines should specify the Purchase Order line being charged

A proforma invoice shall be sent to the SJRA Division Manager Representative, as identified in the Notice to Proceed, and include the following:

- Test results verifying correct working conditions for EACH motor repaired or reconditioned must be received by the SJRA Division Manager Representative before payment will be remitted.
- Test results may either accompany the delivery of the motor or be emailed SAME DAY to the SJRA Division Manager Representative.
- Test results shall contain the Purchase Order number, quotation number and invoice number.

Complete and accurate information is required for timely payment. SJRA will, within twenty-one (21) calendar days after receipt of each invoice, accept and process such invoice for payment, or return the invoice to Contractor indicating SJRA’s reasons for refusing to issue payment. If an invoice contains errors or fails to include required information, a corrected invoice should be submitted and payment delays will be incurred. The payment terms commence with performance of Work and/or the delivery of conforming Goods and the receipt of a correct invoice.

4.2 SJRA may withhold or nullify the whole or part of any payment to such extent as may be necessary, but in no event greater than 110% of the disputed amount, on account of:

(a) defective Work not remedied;
(b) third party claims filed or reasonable evidence indicating probable filing of such claims;
(c) failure of Contractor to timely or properly make payments to subcontractors or for labor, materials or equipment;
(d) reasonable evidence that the Work cannot be completed for the unpaid balance of the Contract Price;
(e) damage to SJRA or another contractor for which Contractor is responsible;
(f) reasonable evidence that the Work will not be completed within the Contract Time, and that the unpaid balance would not be adequate to cover actual or liquidated damages or economic disincentives for the anticipated delay;
(g) failure of Contractor to submit or update a schedule of values, submittal schedule, or construction project schedule in accordance with the Contract Documents;
(h) failure of Contractor to maintain a record of changes on drawings and documents;
(i) failure of Contractor to maintain weekly payroll reports and, as applicable, provide copies of reports in a timely manner upon request of Owner;
(j) Contractor's neglect or unsatisfactory prosecution of the Work, including failure to clean up;
(k) property damage claims that are the responsibility of the Contractor; or
(l) failure of Contractor to comply with any provision of the Contract Documents.

Any failure by SJRA to exercise its right to withhold all or any part of payment requested in any invoice as provided in this Paragraph 4.2 shall not be and shall not be construed as (i) a waiver of SJRA's right to do so in the future, or (ii) evidence that any of the circumstances identified in Subparagraphs 4.2(a) through (l) above have not occurred. When the above reasons for withholding payment are remedied or no longer exist, Contractor shall resubmit an invoice for the withheld amounts. Payment will be made within forty-five (45) calendar days of receipt by SJRA of an approved invoice, subject to Paragraph 4.3 below.

4.3 For purposes of this Agreement, "Final Completion" shall be the point in time when SJRA determines that all Work has been completed and the Agreement fully performed except for those obligations that survive final payment. Upon written notice from Contractor that the entire Work is complete, SJRA will make a final inspection with Contractor and provide written notice of all particulars in which this inspection reveals that the Work is incomplete or defective. Contractor shall immediately take such measures as are necessary to complete such Work or remedy such deficiencies. SJRA, other third-party consultants, and any other governmental entity or public authority with jurisdiction over the project may assist SJRA in the inspection and testing of the Work and Contractor agrees to and shall cooperate with any such consultants or authorities with respect to any such inspections and tests. If, on the basis of observation of the Work during construction, final inspection, and review of the final invoice and accompanying documentation as required by the Contract Documents, SJRA is satisfied that the Work has been completed and Contractor's other obligations under the Contract Documents have been fulfilled and there are no outstanding claims, SJRA will pay to Contractor the balance due Contractor under the terms of the Contract. Owner will issue a certificate of Final Completion to Contractor which establishes the Final Completion date. The making and acceptance of final payment will constitute a waiver of all claims by Contractor against SJRA other than those previously made in writing and still unsettled at the time of the final payment.

ARTICLE 5
CONTRACTOR OBLIGATIONS AND REPRESENTATIONS

5.1 Contractor has examined and carefully studied the Contract Documents and other related data identified in SJRA's request for bids, proposals or quotes for the Work and supply of the Goods.

5.2 Contractor has visited the site of the Work and become familiar with and is satisfied as to general, local, and site conditions that may affect cost, progress, and performance of the Work. Contractor has attended any mandatory pre-submittal conference or site visit required by SJRA, and had the opportunity to ask any questions of SJRA relevant to Contractor's performance and completion of the Work and supply of the Goods.

5.3 Contractor is familiar with and is satisfied as to all federal, state, and local laws and regulations that may affect cost, progress, and performance of the Work and supply of the Goods.

5.4 Contractor has carefully studied all: (1) reports of explorations and tests of subsurface conditions at or contiguous to the site of the Work and all drawings of physical conditions in or relating to existing surface or subsurface structures at or contiguous to the site which have been identified in Contract Documents or made available to Contractor by SJRA, and (2) reports and drawings of hazardous environmental conditions, if any, at the site of the Work which have been identified in the Contract Documents.

5.5 Contractor has obtained and carefully studied (or assumes responsibility for having done so) all additional or supplementary examinations, investigations, explorations, tests, studies, and data concerning conditions (surface and subsurface) at or contiguous to the site which may affect cost, progress, or performance of the Work or which relate to any aspect of the means, methods, techniques, sequences, and procedures of construction to be employed by Contractor, including applying specific means, methods, techniques, sequences, and procedures of construction, if any, expressly required by the Contract Documents to be employed by Contractor, and safety precautions and programs incident thereto.

5.6 Contractor does not consider that any further examinations, investigations, explorations, tests, studies, or data are necessary for performance of the Work or supply of the Goods, at Contract Price, within Contract Time, and in accordance with the Contract Documents.

5.7 Contractor is aware of the general nature of any on-going operations and/or work to be performed by the SJRA and others at the site of the Work, and Contractor shall perform the Work and supply of the Goods, in such manner as to minimize any impact on any on-going operations and/or work to be performed by the SJRA and others at the site of the Work, and Contractor shall cooperate with SJRA and others to coordinate the Work with any on-going operations and/or work to be performed by the SJRA and others at the site of the Work.

5.8 Contractor has correlated information known to Contractor, information and observations obtained from visits to the site of the Work, reports and drawings identified in the Contract Documents or made available to Contractor by SJRA, and all additional examinations, investigations, explorations, tests, studies, and data with the Contract Documents.

5.9 Contractor has given SJRA prompt written notice of all conflicts, errors, ambiguities, or discrepancies that Contractor has discovered in the Contract Documents, and the written resolution thereof by SJRA is acceptable to Contractor. If Contractor fails to provide SJRA with prompt written notice of any conflicts, errors, ambiguities, or discrepancies that Contractor knew of, or in using reasonable diligence should have known, then Contractor shall be responsible for correction of such conflicts, errors, ambiguities, or discrepancies and damages related thereto.

5.10 The Contract Documents are generally sufficient to indicate and convey understanding of all requirements for performance and furnishing of the Work.

5.11 Contractor hereby agrees that the following terms, conditions, verifications, certifications, and representations apply to and are incorporated into this Agreement for all purposes, and Contractor shall deliver to SJRA signed and notarized verifications prior to commencement of any Work:

(a) With respect to performing the Work and providing the Goods hereunder, Contractor shall comply with any applicable Equal Employment Opportunity and/or Affirmative Action ordinances, rules, or regulations during the term of this Agreement.

(b) Pursuant to Texas Local Government Code Chapter 176, Contractor shall submit a signed Texas Ethics Commission ("TEC") Conflict of Interest Questionnaire ("CIQ") at the time Contractor submits this signed Agreement to SJRA. TEC Form CIQ and information related to same may be obtained from TEC website by visiting https://www.ethics.state.tx.us/forms/conflict/. If Contractor certifies that there are no Conflicts of Interest, Contractor shall indicate so by writing name of Contractor's firm and "No Conflicts" on the TEC Form CIQ.

(c) If Contractor is a privately held entity, then pursuant to Texas Government Code Section 2252.908 and the rules promulgated thereunder by the TEC, Contractor shall submit a completed and signed TEC Form 1295 with a certificate number assigned by the TEC to SJRA at the time Contractor submits this signed Agreement to SJRA. TEC Form 1295 and information related to same may be obtained from TEC website by visiting https://www.ethics.state.tx.us/filinginfo/1295/. Contractor agrees and acknowledges that this Agreement shall be of no force and effect unless and until Contractor has submitted said form to SJRA, if and to the extent such form is required under Government Code § 2252.908 and the rules promulgated thereunder by the TEC.

(d) As required by Chapter 2271, Texas Government Code, Contractor hereby verifies that Contractor, including a wholly owned subsidiary, majority-owned subsidiary, parent company or affiliate of the same, does not boycott Israel and will not boycott Israel through the term of this Agreement. The term "boycott Israel" in this Paragraph has the meaning assigned to such term in Section 808.001 of the Texas Government Code, as amended.

(e) Pursuant to Chapter 2252, Texas Government Code, Contractor represents and certifies that, at the time of execution of this Agreement, neither Contractor, nor any wholly owned subsidiary, majority-owned subsidiary, parent company or affiliate of the same, is engaged in business with Iran, Sudan, or any terrorist organization, and is a company listed by the Texas Comptroller of Public Accounts under Sections 2270.0201 or 2252.153 of the Texas Government Code.

(f) As required by Section 2274.002, Texas Government Code (as added by Senate Bill 13, 87th Texas Legislature, Regular Session), as amended, Contractor hereby verifies that Contractor, including any wholly owned subsidiary, majority-owned subsidiary, parent company or affiliate of the same, does not boycott energy companies, and will not boycott energy companies during the term of this Agreement. The term "boycott energy companies" in this Paragraph shall have the meaning assigned to the term "boycott energy company" in Section 809.001, Texas Government Code, as amended.

(g) As required by Section 2274.002, Texas Government Code (as added by Senate Bill 19, 87th Texas Legislature, Regular Session, "SB 19"), as amended, Contractor hereby verifies that Contractor, including any wholly owned subsidiary, majority-owned subsidiary, parent company or affiliate of the same, (i) does not have a practice, policy, guidance or directive that discriminates against a firearm entity or firearm trade association, and (ii) will not discriminate against a firearm entity or firearm trade association during the term of this Agreement. The term "discriminate against a firearm entity or trade association" in this Paragraph shall have the meaning assigned to such term in Section 2274.001(3), Texas Government Code (as added by SB 19), as amended.

(h) Pursuant to Chapter 2274 of the Texas Government Code (as added by Senate Bill 2116, 87th Legislature, Regular Session), as amended, and to the extent this Agreement grants to Contractor direct or remote access to the control of critical infrastructure, excluding access specifically allowed

for product warranty and support, Contractor verifies that neither Contractor, including any wholly owned subsidiary, majority-owned subsidiary, parent company, or affiliate of the same, nor any of its sub-contractors are: (i) owned or controlled by (a) individuals who are citizens of China, Iran, North Korea, Russia, or a designated country; or (b) a company or other entity, including a governmental entity, that is owned or controlled by citizens of or is directly controlled by the government of China, Iran, North Korea, Russia, or a designated country; or (ii) headquartered in China, Iran, North Korea, Russia or a designated country. The term "designated country" in this Paragraph means a country designated by the Governor as a threat to critical infrastructure under Section 2274.0103, Texas Government Code. The term "critical infrastructure" in this Paragraph shall have the meaning assigned to such term in Section 2274.0101, Texas Government Code.

Contractor acknowledges and agrees that projects of SJRA may be subject to review and approval by other third parties. Accordingly, as and when requested by SJRA, Contractor shall submit such information and cooperate with the other third parties to the extent necessary to undergo any such review or obtain any such approval.

5.12 Contractor warrants that (1) all Goods, including but not limited to all materials and equipment furnished under this Agreement will be new and of good quality unless otherwise expressly provided herein; (2) all Work will be performed in a good and workmanlike manner, and free from defects in material and workmanship; and (3) all Work and Goods provided, will conform to the requirements of the Contract Documents. Work not conforming to these requirements, including any substitutions not properly approved and authorized in writing by SJRA, may be considered defective. The Contractor shall promptly correct all Work and Goods provided, rejected by SJRA as failing to conform to the requirements of the Contract Documents. The Contractor shall bear all costs of correcting such rejected Work or rejected Goods, including but not limited to the costs of uncovering the Work, and costs of repairing or replacing other work or goods, property or improvements of SJRA damaged as a result of Contractor's defective Work, defective Goods, or Contractor's correction of its defective Work or defective Goods, and any additional inspections or testing required. In addition to the Contractor's other obligations including but not limited to any other implied or express warranties under the Contract Documents, the Contractor shall, for a period of one (1) year after completion of the Work, correct all Work and supplied Goods not conforming to the requirements of the Contract Documents at Contractor's sole cost and expense. If the Contractor fails to correct non-conforming Work and supplied Goods, within a reasonable time, SJRA may correct it and Contractor shall promptly pay SJRA all costs of correction. Nothing contained in this Paragraph 5.12 shall be construed to establish a period of limitation with respect to other obligations which the Contractor might have under the Contract Documents or at law or in equity. Establishment of the one-year period for correction of Work and supplied Goods, as described in this Paragraph 5.12 relates only to the specific obligation of the Contractor to correct the Work and supplied Goods, and has no relationship to the time within which the obligation to comply with the Contract Documents and any implied warranties may be sought to be enforced, nor to the time within which legal proceedings may be commenced to establish the Contractor's liability with respect to the Contractor's obligations other than specifically to correct the Work and supplied Goods.

5.13 Contractor shall not subcontract the performance of the entire Work, supply of Goods, or the supervision and direction of the Work without SJRA's prior written consent. Contractor shall not employ any subcontractor, whether initially or as a substitute, against whom SJRA may have reasonable objection. Contractor shall enter into written agreements with all subcontractors which specifically bind the subcontractors to the applicable terms and conditions of the Contract Documents for the benefit of SJRA. All damage, injury or loss to any property caused, directly or indirectly, in whole or in part, by Contractor or any subcontractor, supplier or any person or organization directly or indirectly employed by any of them to perform or furnish any of the Work or anyone for whose acts any of them may be liable, shall be remedied by Contractor (except to the extent of damage or loss attributable to errors or omissions in the drawings or specifications (unless Contractor had knowledge of the error or omission or using reasonable care should have known of the error and Contractor failed to report same), or to the acts or omissions of Owner or anyone employed by

Owner, or anyone for whose acts any of them may be liable other than Contractor or its agent, or employee, or subcontractors of any tier).

5.14 In accordance with Chapter 2258 of the Texas Government Code, Contractor shall pay and shall require that each of its subcontractors pay not less than the general prevailing rate of per diem wages in the locality in which the Work is to be performed for each craft or type of worker needed to execute the Work, and the prevailing rate for legal holiday and overtime work, as determined by SJRA. Such prevailing rates are those determined by the United States Department of Labor, and are available at https://sam.gov/content/wage-determinations

5.15 Contractor shall maintain a work force adequate to accomplish the Work within the Contract Time. Contractor agrees to employ only orderly and competent workers, skillful in performance of the Work. Contractor and any subcontractor, and their respective employees, may not use or possess any alcoholic or other intoxicating beverages, illegal drugs or controlled substances while on the job or SJRA property, nor may such workers be intoxicated, or under the influence of alcohol or drugs, on the job. Subject to the applicable provision of Texas law, Contractor and any subcontractor and their respective employees, may not use or possess any firearms or other weapons while on the job or on SJRA property. If the SJRA or an SJRA Division representative notifies Contractor that any of worker or representative is incompetent, disorderly, abusive, or disobedient, has knowingly or repeatedly violated safety regulations, has possessed any firearms in contravention of the applicable provisions of Texas Law or this Agreement, or has possessed or was under the influence of alcohol or drugs on the job, Contractor shall immediately remove such worker or representative, including any officer or owner of Contractor, from performing the Work, and may not employ such worker or representative again on the Work without SJRA's prior written consent. Contractor shall at all times maintain good discipline and order on SJRA property in all matters pertaining to this Work.

5.16 Contractor agrees to assign and hereby assigns to SJRA any rights it may have to bring antitrust suits against its manufacturers or suppliers for overcharges on materials incorporated in the Work growing out of illegal price fixing agreements. Contractor further agrees to cooperate with SJRA should SJRA wish to prosecute suits against manufacturers or suppliers for illegal price fixing.

5.17 Contractor shall be fully responsible to SJRA for all acts and omissions of the subcontractors, manufacturers, or suppliers and other persons and organizations performing or furnishing any of the Work under a direct or indirect contract with Contractor just as Contractor is responsible for Contractor's own acts and omissions. Nothing in the Contract Documents shall create for the benefit of any such subcontractor, manufacturer, or supplier or other person or organization any contractual relationship between SJRA and any such subcontractor, supplier, manufacturer or other person or organization, nor shall it create any obligation on the part of SJRA to pay or to see to the payment of any moneys due any such subcontractor, manufacturer or supplier or other person or organization except as may otherwise be required by laws and regulations.

5.18 Contractor shall be solely responsible for efficiently scheduling and coordinating the Work of subcontractors, manufacturers, suppliers and other persons and organizations performing or furnishing any of the Work under a direct or indirect contract with Contractor in order to avoid any delays or inefficiencies in the prosecution of the Work. Contractor shall require all subcontractors, manufacturers, suppliers and such other persons and organizations performing or furnishing the any of the Work to communicate with the designated SJRA Division representative through Contractor.

5.19 Contractor shall pay each subcontractor, manufacturer and supplier their appropriate share of payments made to Contractor not later than ten (10) days from Contractor's receipt of payment from SJRA. To the extent allowed by Texas law, SJRA shall be deemed to be a third party beneficiary to each subcontract and may, if SJRA elects, following a termination of the Contractor, require that the subcontractor(s) perform all or a portion of unperformed duties and obligations under its subcontract(s) for the benefit of SJRA, rather than the Contractor; however, if SJRA requires any such performance by a subcontractor for SJRA's direct benefit, then SJRA shall be bound and obligated to pay such subcontractor the reasonable value for all Work performed

by subcontractor to the date of termination of the Contractor, less payments to Contractor for such subcontractor's work, and for all Work performed by subcontractor thereafter. In the event that SJRA elects to invoke its right under this Paragraph. SJRA will provide written notice of such election to the terminated Contractor and the affected subcontractor(s).

5.20 Contractor shall be responsible at all times for compliance with applicable patents or copyrights encompassing, in whole or in part, any design, device, material, or process utilized directly or indirectly, in the performance of the Work or the formulation of any of the exhibits hereto. SJRA reserves the right to provide its own defense to any suit or claim of infringement of any patent or copyright in which event **CONTRACTOR SHALL INDEMNIFY AND SAVE HARMLESS SJRA FROM ALL COSTS AND EXPENSES OF SUCH DEFENSE AS WELL AS SATISFACTION OF ALL JUDGMENTS ENTERED AGAINST SJRA**. SJRA shall have the right to stop the Work and /or terminate this Agreement at any time in the event SJRA discovers that Contractor's work methodology includes the use of any infringing design, device, material or process.

ARTICLE 6
INDEMNIFICATION; MISCELLANEOUS PROVISIONS

6.1 **Indemnification.**

6.1.1 **TO THE FULLEST EXTENT PERMITTED BY LAWS AND REGULATIONS, CONTRACTOR SHALL DEFEND, INDEMNIFY AND HOLD HARMLESS THE SJRA AND ITS OFFICERS, DIRECTORS, EMPLOYEES, AGENTS, CONSULTANTS, AND OTHER CONTRACTORS (EACH AN "INDEMNITEE" AND COLLECTIVELY, THE "INDEMNITEES") FROM AND AGAINST ALL CLAIMS, COSTS, LOSSES, AND DAMAGES (INCLUDING BUT NOT LIMITED TO ALL FEES AND CHARGES OF ENGINEERS, ARCHITECTS, ATTORNEYS, AND OTHER PROFESSIONALS AND ALL COURT OR ARBITRATION OR OTHER DISPUTE RESOLUTION COSTS) ARISING OUT OF OR RELATING TO THE PERFORMANCE OF THE WORK OR THE SUPPLY OF THE GOODS, PROVIDED THAT ANY SUCH CLAIM, COST, LOSS, OR DAMAGE IS ATTRIBUTABLE TO BODILY INJURY, SICKNESS, DISEASE, OR DEATH, OR TO INJURY TO OR DESTRUCTION OF TANGIBLE PROPERTY (OTHER THAN THE WORK OR THE GOODS THEMSELVES), INCLUDING THE LOSS OF USE RESULTING THEREFROM, BUT ONLY TO THE EXTENT CAUSED BY ANY NEGLIGENT ACT OR OMISSION OF CONTRACTOR, ANY SUBCONTRACTOR, ANY SUPPLIER, OR ANY INDIVIDUAL OR ENTITY DIRECTLY OR INDIRECTLY EMPLOYED BY CONTRACTOR, ANY SUBCONTRACTOR, OR ANY SUPPLIER TO PERFORM ANY OF THE WORK OR SUPPLY ANY OF THE GOODS, OR ANYONE FOR WHOSE ACTS CONTRACTOR, ANY SUBCONTRACTOR, OR ANY SUPPLIER MAY BE LIABLE, AND EVEN IF ANY SUCH CLAIM, COST, LOSS OR DAMAGE IS CAUSED IN PART BY THE NEGLIGENT ACT OR OMISSION OF AN INDEMNITEE.**

6.1.2 In any and all claims against the Indemnitees by any employee (or the survivor or personal representative of such employee) of Contractor, any subcontractor, any supplier, or any individual or entity directly or indirectly employed by Contractor, any subcontractor, or any supplier to perform any of the Work or to supply any of the Goods, or anyone for whose acts Contractor, any subcontractor, or any supplier may be liable, the indemnification obligation under this Article shall not be limited in any way by any limitation on the amount or type of damages, compensation, or benefits payable by or for Contractor or any such subcontractor, supplier, or other individual or entity under workers' compensation acts, disability benefit acts, or other employee benefit acts.

6.1.3 Contractor's obligations under this Agreement to defend, indemnify and hold harmless SJRA shall not be limited in any way by any insurance required of Contractor by this Agreement or otherwise provided or maintained by Contractor. Any insurance obligations of Contractor under this Agreement are independent from Contractor's obligations under this Agreement to defend, indemnify and hold harmless SJRA.

6.2 **Assignment of Contract**. No assignment of any rights under or interests in this Agreement will be binding on another Party hereto without the written consent of the Party sought to be bound, and unless specifically stated to the contrary in any written consent to an assignment, no assignment will release or discharge the assignor from any duty or responsibility under the Contract Documents.

6.3 **Successors and Assigns**. The SJRA and Contractor each binds itself, its partners, successors, permitted assigns, and its legal representatives to the other Party hereto, its partners, successors, permitted assigns, and its legal representatives in respect to all covenants, agreements, and obligations contained in the Contract Documents.

6.4 **Termination of Contract.** SJRA may terminate this Agreement without cause and for its convenience at any time upon **thirty (30)** days' written notice. Upon the Contractor's receipt of such notice, the Contractor shall cease performing the Work immediately. The Contractor shall be compensated for the Work satisfactorily performed and Goods satisfactorily delivered, prior to the termination date.

6.5 **Dispute Resolution.** This Agreement and any disputes related to it shall be governed by and construed in accordance with the laws of the State of Texas, without regard to its conflict or choice of law principles. Contractor agrees and acknowledges that Contractor's obligations under this Agreement must be performed in whole or in part in Montgomery County, Texas, and venue of any and all legal proceedings between SJRA and the Contractor shall lie in Montgomery County, Texas. If Contractor brings any claim against SJRA and Contractor does not prevail with respect to such claim, Contractor shall be liable for all attorneys' fees and costs incurred by SJRA as a result of such claim.

6.6 **Independent Contractor.** It is understood and agreed that the relationship of Contractor to SJRA shall be that of an independent contractor. Nothing contained herein or inferable here from shall be deemed or construed to (1) make the Contractor the agent, servant, or employee of SJRA, or (2) create any partnership, joint venture, or other association between SJRA and Contractor. Contractor shall be solely responsible for all means, methods, techniques and safety measures utilized in performance of the Work and the supply of the Goods.

6.7 **Safety.** Contractor agrees that, as between SJRA and Contractor, Contractor shall be solely responsible for the safety of its employees, and the establishment and enforcement of all safety precautions, programs and practices in connection with the Work as necessary to protect all persons and property from injury, death, loss or damage arising out of or related to the Work and to the supply of the Goods, including but not limited to the erection and maintenance of barricades, installation of warning signage, and institution of other traffic and/or pedestrian control measures, and Contractor shall at all times comply with all health, safety and environmental federal, state and local laws, codes, regulations, ordinances and permits applicable to the Work and to the supply of the Goods, including but not limited to the Occupational Safety and Health Act of 1970 (OSHA) as amended and the regulations thereto, all requirements of the Texas Commission on Environmental Quality, and the Centers for Disease Control and Prevention (CDC).

6.8 **Use of Premises.** Contractor shall confine construction equipment, the storage of materials and equipment, and the operations of workers to the site of the Work and land and areas identified in and permitted by the Contract Documents, and other land and areas permitted by laws and regulations, rights-of-way, permits and easements, and shall not unreasonably encumber the site of the Work with construction equipment or other materials or equipment. During the progress of the Work and on a daily basis, Contractor shall keep the site of the Work free from any accumulations of waste materials, rubbish and other debris resulting from the Work. Contractor shall provide such personnel, waste containers and/or equipment necessary to maintain an orderly, clean and safe work site. Contractor shall keep all streets, access streets, driveways, and areas of public access, walkways, and other designated areas clean and open at all times. Contractor shall remove all waste materials, rubbish and debris from and about the site of the Work at the end of each work day. At the completion of the Work, Contractor shall also remove all tools, appliances, construction equipment and machinery, and surplus materials. Contractor shall leave the site of the Work

clean, and restore to original condition all property not designated for alteration by the Contact Documents. If the Contractor fails to clean up at the end of each work day or restore the site of the Work at the completion of the Work, SJRA may do so and the cost thereof will be charged to the Contractor and may be offset against any sum otherwise due Contractor.

6.9 **Legal Compliance.** Contractor shall comply with all federal, state and local laws, codes, regulations, ordinances and permits applicable to performance of the Work, including but not limited to all wage and employment laws, and the Immigration Reform and Control Act of 1986, as amended, and Contractor shall maintain and require that its subcontractors maintain any and all licenses required for performance of the Work.

6.10 **Stop Work Notice.** SJRA may issue an immediate "Stop Work Notice" in the event the Contractor is observed performing Work in a manner that is in violation of federal, state and local laws, codes, regulations, ordinance and permits, or in a manner that is determined by SJRA to be unsafe to either life or property. Upon Contractor's receipt of the Stop Work Notice, the Contractor shall immediately cease all Work until notified by SJRA that the violation or unsafe condition has been corrected. The Contractor shall be liable for all costs incurred by SJRA as a result of the issuance of such Stop Work Notice.

6.11 **Insurance.** Contractor shall obtain and maintain insurance as provided in **Exhibit B** attached hereto and incorporated herein.

6.12 **SJRA's Rights and Remedies.** All rights and remedies of SJRA under the Contract Documents are cumulative and in addition to all other rights and remedies available to SJRA at law or in equity.

6.13 **Warranty**. Contractor shall provide a one (1) year warranty document. This warranty shall be substantially similar to those warranties in Paragraph 5.12 above, and shall obligate the Contractor to provide all equipment, materials, workmanship, and labor at no charge during the Warranty period, and to correct any defect excluding any damage caused by misuse, abuse, vandalism, or acts of God.

6.14 **Shipping Terms of Sale.** SJRA shipping terms of sale is FOB Destination.

6.15 **Removal, Transportation and Return of SJRA's Property, Equipment or Parts.** Contractor is responsible for any damages occurring to SJRA property, equipment or parts while Contractor, or any subcontractor or third party acting on behalf of Contractor, is (i) working on SJRA property, equipment or parts; or (ii) transporting SJRA property, equipment or parts.

6.16 **Confidentiality.** Neither Contractor nor any of its subcontractors shall publish or release any publicity or public relations materials of any kind concerning or relating to this Agreement, the Work or the activities of SJRA, unless such materials have first been reviewed and approved in writing by SJRA. This provision shall not apply to mandatory reports which Contractor or its subcontractors are required by law to file with governmental authorities.

ARTICLE 7
ENUMERATION OF CONTRACT DOCUMENTS

7.1 The Contract Documents are comprised of this Agreement and the following exhibits:

Exhibit A: Contractor's Proposal
Exhibit B: Insurance Requirements
Exhibit C: Contractor's Certificate of Insurance
Exhibit D: Technical Specifications and Drawings
(these may be provided in separate attachments)

7.2 The Contract Documents may only be amended, modified, or supplemented in writing agreed to and signed by the Parties.

7.3 The Contract Documents represent the entire and integrated agreement between SJRA and the Contractor and supersede all prior and contemporaneous negotiations, representations, or agreements, either written or oral.

7.4 To the extent there are any conflicts between the terms and provisions of this Agreement and the other Contract Documents, this Agreement shall control.

***** Remainder of Page Left Blank Intentionally *****

ARTICLE 8
SIGNATURES

8.1 This Agreement may be executed in counterparts, each of which shall be deemed an original, but all of which together shall be deemed to be one and the same agreement. A signed copy of this Agreement delivered by facsimile, email, or other means of electronic transmission shall be deemed to have the same legal effect as delivery of an original signed copy of this Agreement. Duplicate copies of duly executed and delivered counterparts of this Agreement shall be deemed to have the same full force and effect as originals and may be relied upon as such. Notwithstanding the foregoing, SJRA and Contractor agree that this Agreement may be executed using electronic signatures only at the option and in the sole discretion of SJRA, and, in such event, the provisions of the Uniform Electronic Transaction Act, Chapter 332, Texas Business and Commerce Code, as amended, and any applicable policies and procedures of SJRA regarding electronic signatures shall apply. SJRA reserves the right to require an original, hard copy executed Agreement.

IN WITNESS WHEREOF, the Parties have entered into this Agreement as of the day and year herein below written.

EXECUTED this _____ day of _____, 20____.

SAN JACINTO RIVER AUTHORITY:

_____
Aubrey A. Spear, General Manager

APPROVED AS TO CONTENT:

_____
Samir Solanki, Chief Operations Officer

APPROVED AS TO FORM:

_____
Amy L. Sims, General Counsel

NAME OF OTHER PARTY:

_____
Name, Title, Date

EXHIBIT A
CONTRACTOR'S PROPOSAL

EXHIBIT A

CONTRACTOR'S PROPOSAL FORM

Contract # 27-0021 Lake Conroe Dam Relief Wells Annual Maintenance Services

The respondent shall complete the following section, which directly corresponds to the specifications. The contractor shall not make changes to this format.

1		Respondent's Name:	Integrity Pipeline Services Inc	**IPS, Inc**
2		Respondent is a Corporation, Partnership, sole Proprietorship, Individual?		**Corporation**
3		Total calendar days after Notice to Proceed is issued by SJRA for substantial		
4		Total calendar days after Notice to Proceed is issued by SJRA for project start:		
Quotation Pricing:				
5		A. Total Base Quotation Price to construct project per specifications:		
		B. Add Extra Unit Items		
		E. Total Proposed Cost to Complete Project		**$0.00**

A.Detailed Pricing - Base Items

Item No.	Qty.	Unit	Spec. Reference	Description	Unit Price (this column controls)	Quotation Price
1	1	LS	01 71 13	Mobilization (Not to Exceed 5% of the total proposal price). See Specification Section 01 71 13 - Mobilization for	$4,500.00	$4,500.00
2	1	EA (per Well)	35 15 53	Pre-Maintenance Inspection and Testing of Wells	$2,184.00	$2,184.00
3	1	EA (per Well)	35 15 53	Mechanical Cleaning and Development Process (Maintenance)	$13,095.00	$13,095.00
4	1	EA (per Well)	35 15 53	Post-Maintenance Inspection and Testing of Well	$2,184.00	$2,184.00
5	1	EA (per Well)	35 15 53	Collection and Disposal	$700.00	$700.00
6	1	EA (per Well)	35 15 53	Record of Maintenance (Relief Well Inspection Report Forms and Video Inspection Files) per each well	$950.00	$950.00
A. Total Base Items:					**$23,613.00**	

B. EXTRA UNIT PRICE ITEMS

Item No.	Qty.	Unit	Spec. Reference	Description	Unit Price (this column controls)	Quotation Price
1	1	EA (Per Well)	01 74 23	Restoration of all disturbed area (no hydromulching) per each well	$437.50	$437.50
B. Total Extra Unit Price Items:					**$437.50**	

EXHIBIT B
INSURANCE REQUIREMENTS

For purposes of this Exhibit B, "ISO" means Insurance Services Office.

1.0 Contractor Insurance Representations to SJRA.

1.1 It is expressly understood and agreed that the insurance coverages required herein:

1.1.1 Represent SJRA's minimum requirements and are not to be construed to void or limit Contractor's indemnity obligations as contained in the Contract, nor represent in any manner a determination of the insurance coverages Contractor should or should not maintain for its own protection; and

1.1.2 Are being, or have been, obtained by Contractor in support of Contractor's liability and indemnity obligations under the Contract. Irrespective of the requirements as to insurance to be carried as provided for herein, the insolvency, bankruptcy or failure of any insurance company carrying insurance of Contractor, or the failure of any insurance company to pay claims accruing, shall not be held to affect, negate or waive any of the provisions of the Contract.

1.2 Failure to obtain and maintain the required insurance shall constitute a material breach of, and default under, this Contract. If Contractor shall fail to remedy such breach, Contractor will be liable for any and all costs, liabilities, damages and penalties resulting to SJRA from such breach, unless a written waiver of the specific insurance requirement(s) is provided to Contractor by SJRA. In the event of any failure by Contractor to comply with the insurance requirements of the Contract, SJRA may, without in any way compromising or waiving any right or remedy at law or in equity, on notice to Contractor, purchase such insurance, at Contractor's expense, provided that SJRA shall have no obligation to do so and if SJRA shall do so, Contractor shall not be relieved of or excused from the obligation to obtain and maintain such insurance amounts and coverages.

2.0 Conditions Affecting All Insurance Required Herein.

2.1 Cost of Insurance. All insurance coverage shall be provided at Contractor's sole expense.

2.2 Maintenance of Insurance. All insurance coverage shall be maintained in effect with limits not less than those set forth below at all times during the performance of the Work and through the correction period of paragraph 5.13 of the Agreement, and for such longer periods of time as may be set forth herein.

2.3 Status and Rating of Insurance Company. All insurance coverage shall be written through insurance companies authorized to do business in the State of Texas and rated no less than A-: VII in the most current edition of A. M. Best's Key Rating Guide.

2.4 Restrictive, Limiting, or Exclusionary Endorsements. All insurance coverage shall be provided to SJRA in compliance with the requirements herein.

2.5 Limits of Liability. The limits of liability may be provided by a single policy of insurance or by a combination of primary and umbrella policies, but in no event shall the total limits of liability available for any one occurrence or accident be less than the amount required herein.

2.6 Notice of Cancellation or Material Change in Coverage. Contractor and the insurer shall provide SJRA with thirty days prior written notice of cancellation or material change in coverage.

2.7 Waiver of Rights of Recovery and Subrogation. The Contractor hereby waives its rights of recovery from the SJRA with regard to all causes of property and/or liability loss and shall cause a waiver of subrogation endorsement to be provided in favor of SJRA on all insurance coverage carried by the Contractor, whether required herein or not.

2.8 Deductible/Retention. Except as otherwise specified herein, no insurance required herein shall contain a deductible or self-insured retention in excess of $10,000 without prior written approval of SJRA. All deductibles and/or retentions shall be paid by, assumed by, for the account of, and at Contractor's sole risk. Contractor shall not be reimbursed for same. If the insurance contains a self-insured retention, the policy shall allow the self-insured retention to be paid or satisfied by a party other than the named insured.

2.9 Minimum Limits. The inclusion of required minimum insurance limits in the Contract Documents shall not be construed as limiting the SJRA's or other additional insured's rights under any policy with higher limits. The minimum insurance limits set forth in this Exhibit D shall be deemed to be amended to any higher limits actually contained in Contractor's insurance policies.

3.0 Intentionally Omitted.

4.0 Insurance Required.

4.1 The following insurance shall be maintained in effect with limits not less than those set forth below at all times during the term of the Agreement and thereafter as required.

PLEASE NOTE: These requirements should provide general guidance only, additional requirements based on project specifics of the contract may be required. Contract amounts over limits will require excess coverage to cover the difference. Combined single limits and excess coverage must equal the Contract Amount (CA).

Risk Level TIER 1	Coverage		Contract Amount <=$25k	>$25k-$75k	>$75k-$1M	>=$1M-$2M	>$2M
Administrative/ General Business Services **Services:** Routine/regularly scheduled services such as landscaping, janitorial, or maintenance- elevators **Contract Type:** ➢ General Services Contract ➢ Standby Services Agreement	**Commercial General Liability (CGL)** (Premises/Completed Operations)	Each Occurrence	$300k	$500K	$1M	$1.5M	= $2M
		Fire Damage	$100k	$250k	$1M	$1.5M	= $2M
		Personal & ADV injury	$300k	$500k	$1M	$1.5M	= $2M
		Aggregate	$600K	$750k	$2M	$3M	= $4M
		Premises/Operations	$300k	$500k	$1M	$1.5M	=$2M
		Products/Completed Operations	$300K	$500k	$1M	$1.5M	= $2M
	Workers Compensation	Per occurrence bodily injury	$500k	$500k	$500k	$500k	$500k
		Per occurrence bodily injury by disease	$500k	$500k	$500k	$500k	$500k
		Policy Limit for Bodily Injury Disease	$500k	$500k	$500k	$500k	$500k
	Business Auto Liability Owned, Non-Owned, Hired, Injury and Property coverage for all	Bodily Injury	$250k	$500k	$500k	$1M	= $2M
		Property Damage	$100k	$500k	$500k	$1M	= $2M
		Combined Single Limit (Bodily & Property Damage)	$500k	$1M	$1M	$2M	= $2M
	Professional Liability	Professional required based on the scope of work	$250k	$500k	$1M	$2M	= $2M
	Cyber Liability	Cyber required based on the scope of work	$250k	$500k	$1M	$2M	= $2M

4.2 Commercial General Liability Insurance

4.2.1 Coverage. Such insurance shall cover liability arising out of all locations and operations of Contractor, including but not limited to liability assumed under the Contract Documents (including the tort liability of another assumed in a business contract). Defense shall be provided as an additional benefit and not included within the limit of liability.

4.2.2 Form. Commercial General Liability Occurrence form (at least as broad as an unmodified current ISO edition of CG 00 01) to include, but not be limited to, coverage for the Contractor's premises, operations (including completed operations), products, and contractual assumption of tort liability.

4.2.3 Amount of Insurance. Coverage shall be provided with limits of not less than the above stated table.

4.2.4 Required Endorsements.

a. Additional Insured. Additional insured status shall be provided in favor of the SJRA on a combination of ISO forms CG 20 10 10 01 and CG 20 37 10 01 or their combined equivalent. It is the intent of the parties to this Agreement that this Additional Insured status shall include coverage for completed operations and for the SJRA's concurrent and sole negligence. Notwithstanding the foregoing, if Subchapter C of Chapter 151 of the Texas Insurance Code applies to the Contract, this Additional Insured obligation shall not require or provide coverage the scope of which is prohibited under Subchapter C of Chapter 151 of the Texas Insurance Code for an agreement to indemnify, hold harmless or defend.

b. Designated Construction Project(s) Aggregate Limit. The aggregate limit shall apply separately to this Agreement through use of an ISO CG 25 03 05 09 endorsement or its equivalent.

c. Notice of Cancellation or Material Change in Coverage, as required in 2.6, above.

d. Primary and Non-Contributing Liability. All insurance coverage required of the Contractor shall be primary to and shall seek no contribution from all insurance available to SJRA, with SJRA's insurance being excess, secondary and non-contributing. This CGL coverage shall be endorsed to provide such primary and non-contributing liability coverage.

e. Waiver of Rights of Recovery and Subrogation, as required in 2.7, above.

4.2.5 Continuing Commercial General Liability Insurance. Contractor shall maintain such insurance in identical coverage, form and amount, including required endorsements, for at least three (3) years following Date of Final Completion of the Work to be performed under the Contract.

4.3 Auto Liability Insurance

4.3.1 Coverage. Such insurance shall cover liability arising out of any auto (including owned, hired, and non-owned).

4.3.2 Form. Business Auto form (at least as broad as an unmodified current ISO edition of CA 00 01).

4.3.3 Amount of Insurance. Coverage shall be provided with a limit of not less than the above stated table.

4.3.4 Required Endorsements.

a. Notice of Cancellation or Material Change in Coverage, as required in 2.6, above.

b. Waiver of Rights of Recovery and Subrogation, as required in 2.7, above.

c. Additional insured status in favor of the SJRA. Notwithstanding the foregoing, if Subchapter C of Chapter 151 of the Texas Insurance Code applied to the Contract, this Additional Insured obligation shall not require or provide coverage the scope of which is prohibited under Subchapter C of Chapter 151 of the Texas Insurance Code for an agreement to indemnify, hold harmless or defend.

d. Primary and Non-Contributing Liability. All insurance coverage required of the Contractor shall be primary to and shall seek no contribution from all insurance available to SJRA, with SJRA's insurance being excess, secondary and non-contributing. This Auto Liability Insurance coverage shall be endorsed to provide such primary and non-contributing liability coverage.

4.4 Workers' Compensation/Employer's Liability Insurance

4.4.1 Amounts of coverage shall be no less than Statutory Limits; each Accident and Disease (see requirements stated in table above).

4.5 Excess Liability Insurance

4.5.1 Coverage. Such insurance shall be excess over and be no less broad than all coverages described above (with the exception of Worker's Compensation) and shall include a drop-down provision.

4.5.2 Form. This policy shall have the same inception and expiration dates as the Commercial General Liability insurance required above.

4.5.3 Amount of Insurance. Coverage shall be provided with a limit of not less than the above stated table.

4.5.4 Continuing Excess Liability Insurance. Contractor shall maintain such insurance in identical coverage, form and amount, including required endorsements, for at least three (3) years following Date of Final Completion of the Work to be performed under the Contract.

4.5.5 Additional insured status shall be provided in favor of the SJRA. Notwithstanding the foregoing, if Subchapter C of Chapter 151 of the Texas Insurance Code applies to the Contract, this Additional Insured obligation shall not require or provide coverage the scope of which is prohibited under Subchapter C of Chapter 151 of the Texas Insurance Code for an agreement to indemnify, hold harmless or defend. This Excess Liability Insurance shall be primary to and shall seek no contribution from all insurance available to the SJRA, with SJRA's insurance being excess, secondary and non-contributing.

5.0 Evidence of Insurance.

5.1 Provision of Evidence. Evidence of the insurance coverage required to be maintained by Contractor, represented by certificates of insurance, evidence of insurance consistent with the requirements of Chapter 1811 of the Texas Insurance Code, and endorsements issued by the insurance company or its legal agent, must be furnished to SJRA not later than 15 days prior to commencement of Work. New certificates of insurance, evidence of insurance, and endorsements shall be provided to SJRA prior to the termination date of the current certificates of insurance, evidence of insurance, and endorsements.

5.2 Form. All liability insurance required herein shall be evidenced by ACORD form 25, "Certificate of Insurance", or if such form is not filed with and approved or deemed approved by the Texas Department of Insurance, then on a form filed with and approved by or deemed approved by the Texas Department of Insurance and acceptable to SJRA.

5.3 Specifications. Such certificates of insurance, evidence of insurance, and endorsements shall specify the following, excluding, however, any such specifications as may be prohibited under Chapter 1811 of the Texas Insurance Code:

5.3.1 SJRA as a certificate holder with correct mailing address.
5.3.2 Insured's name, which must match that on this Contract.
5.3.3 Insurance companies affording each coverage, policy number of each coverage, policy dates of each coverage, all coverages and limits described herein, and signature of authorized representative of insurance company.
5.3.4 Producer of the certificate with correct address and phone number listed.
5.3.5 Additional insured status required herein.
5.3.6 Amount of any deductibles and/or retentions.
5.3.7 Cancellation and material change in coverage notification as required by the policy or any endorsement thereto in accordance with Section 3.6 of this Exhibit D.
5.3.8 Designated Construction Project Aggregate Limits required herein.
5.3.9 Primary and non-contributing status required herein.
5.3.10 Waivers of subrogation required herein.

5.4 Required Endorsements. A copy of the Commercial General Liability additional insured, waiver of subrogation and primary/noncontributing endorsement(s) or policy language shall also be provided.

5.5 Failure to Obtain. Failure of SJRA to demand such certificate or other evidence of full compliance with these insurance requirements or failure of SJRA to identify a deficiency from evidence that is provided shall not be construed as a waiver of Contractor's obligation to maintain such insurance.

5.6 Copies. Upon request of SJRA, Contractor shall provide to SJRA a copy of all insurance policies required herein within ten (10) days of any such request. Renewal policies, if necessary, shall be delivered to SJRA at least ten (10) days prior to the expiration of the previous policy.

5.7 Commencement of Work. Commencement of Work without provision of the required certificate of insurance, evidence of insurance and/or required endorsements, or without compliance with any other provision of this Contract, shall not constitute a waiver by SJRA of any rights of SJRA. SJRA shall have the right, but not the obligation, of prohibiting Contractor or any subcontractor from performing any Work until such certificate of insurance, evidence of insurance and/or required endorsements are received and approved by SJRA.

6.0 Intentionally Omitted.

7.0 Insurance Requirements of Contractor's Subcontractors and for Contractor's Property and Equipment.

7.1 Insurance similar to that required of Contractor shall be provided by all subcontractors and sub-subcontractors (or provided by Contractor on behalf of subcontractors or sub-subcontractors) to cover operations performed under any subcontract agreement. Limits of subcontractors' coverage shall be per Contractor's standard requirements. Contractor shall be held responsible for any modification in these insurance requirements as they apply to subcontractors and sub-subcontractors. Contractor shall maintain certificates of insurance from all subcontractors and sub-subcontractors containing provisions similar to those listed herein (modified to recognize that the certificate is from a subcontractor or sub-subcontractor) enumerating, among other things, the waivers of subrogation, additional insured status, and primary liability as required herein, and make them available to SJRA upon request. Subcontractor's Commercial General Liability insurance policies shall name the SJRA as an additional insured.

7.2 Contractor is fully responsible for loss and damage to its property on the site, including tools and equipment, and shall take necessary precautions to prevent vandalism, theft, burglary, pilferage and unexplained disappearance of property. Any insurance covering Contractor's or its subcontractor's property shall be Contractor's and its subcontractor's sole and complete means or recovery for any such loss. To the extent any loss is not covered by said insurance or subject to any deductible or co-insurance, Contractor shall not be reimbursed for same. Should Contractor or its subcontractors choose to self-insure this risk, it is expressly agreed that Contractor hereby waives, and shall cause its subcontractors to waive, any claim for damage or loss to said property in favor of SJRA.

8.0 Release and Waiver.

Contractor hereby releases, and shall cause its subcontractors and sub-subcontractors to release, SJRA from any and all claims or causes of action whatsoever which Contractor and/or its subcontractors or sub-subcontractors might otherwise now or hereafter possess resulting in or from or in any way connected with any loss covered by insurance, whether required herein or not, or which should have been covered by insurance required herein, including the deductible and/or uninsured portion thereof, maintained and/or required to be maintained by Contractor and/or its subcontractors and sub-subcontractors pursuant to this Contract. Contractor shall be responsible for any Builder's Risk deductible applicable to the Work. Contractor waives all damages and rights of recovery against the SJRA and SJRA's separate contractors for damages caused by fire or other causes of loss to the extent covered by any Builder's Risk property insurance applicable to the Contractor's work under the Contract, except such rights as Contractor may have to proceeds of such insurance as Contractor's interest may appear.

EXHIBIT C
CONTRACTOR'S CERTIFICATE OF INSURANCE

EXHIBIT D
TECHNICAL SPECIFICATIONS AND DRAWINGS
(these may be provided in separate attachments)

SJRA
SAN JACINTO RIVER AUTHORITY

San Jacinto River Authority
Purchasing Department
1577 Dam Site Road
Conroe, Texas 77304

TECHNICAL SPECIFICATIONS
Contract No. 27-0021

LAKE CONROE DIVISION
LAKE CONROE DAM RELIEF WELLS MAINTENANCE

Date Issued: October 1, 2026

STATE OF TEXAS
GREGORY R. LUSHBAUGH
90211
LICENSED
PROFESSIONAL ENGINEER

10-01-2026

SAN JACINTO RIVER AUTHORITY

Disclosure Requirements

Chapter 176 of the Texas Local Government Code mandates the public disclosure of certain information concerning persons doing business or seeking to do business with the San Jacinto River Authority, including affiliations and business and financial relationships such persons may have with San Jacinto River Authority officers. An explanation of the requirements of Chapter 176, applicable forms and a complete text of the new law are available at: http://www.sjra.net. If you are unable to obtain such information online, please contact the San Jacinto River Authority Purchasing Department, 1577 Dam Site Road, Conroe, Texas 77304 or call (936) 588-3111.

BY DOING BUSINESS OR SEEKING TO DO BUSINESS WITH THE SAN JACINTO RIVER AUTHORITY, YOU ACKNOWLEDGE THAT YOU HAVE BEEN NOTIFIED OF THE REQUIREMENTS OF CHAPTER 176 OF THE TEXAS LOCAL GOVERNMENT CODE AND THAT YOU ARE SOLELY RESPONSIBLE FOR COMPLYING WITH THEM.

TABLE OF CONTENTS

TECHNICAL SPECIFICATIONS

Division 01 - GENERAL REQUIREMENTS
01 11 13 Work Covered By Contract Documents 11-05-2021
01 14 19 Use of Premises.....11-05-2021
01 22 00 Unit Prices 11-05-2021
01 25 13 Product Substitutions 11-05-2021
01 26 63 Change Orders.....11-05-2021
01 29 73 Schedule of Values 11-05-2021
01 32 16 Construction Progress Schedule.....11-05-2021
01 32 36.01 Project Photographs.....11-05-2021
01 33 00 Submittals 11-05-2021
01 35 05 Environmental Protection and Special Controls.....11-05-2021
01 45 16.32 Contractor Quality Control.....11-05-2021
01 65 50 Product Delivery, Storage, and Handling 11-05-2021
01 71 13 Mobilization 11-05-2021
01 74 19 Construction Waste Management and Disposal 11-05-2021
01 74 23 Restoration of Site.....11-05-2021
01 77 19 Closeout Requirements.....11-05-2021
01 78 39 Project Record Documents 11-05-2021

Division 32 - EXTERIOR IMPROVEMENTS
32 92 13 Hydro-Mulching 10-08-2014

Division 35 – WATERWAY AND MARINE CONSTRUCTION
35 15 53 Relief Well Maintenance 10-01-2026

APPENDIX A – SUPPLEMENTAL INFORMATION.....10-01-2026

END OF SECTION

SECTION 01 11 13

WORK COVERED BY CONTRACT DOCUMENTS

PART 1 - GENERAL

1.1 SUMMARY

A. Section Includes

1. Definitions.
2. Work Covered by Contract Documents.
3. Cash Allowances.
4. Owner-Furnished Products.
5. Document Management Software.
6. Work Sequence.
7. Work Guidelines.
8. Coordination of Work.
9. Contractors Use of Premises.
10. Contract Clarification.
11. Alternate Construction Methods.
12. Utility Lines.
13. Warranty.

B. Related Specification Sections include but are not necessarily limited to:

1. Proposing Requirements, Contract Forms, and Conditions of the Contract.
2. Division 01 – General Requirements.

1.2 MEASUREMENT AND PAYMENT

A. No separate payment will be made for this item. Include the cost in associated items for this project.

1.3 SUBMITTALS (NOT USED)

1.4 DEFINITIONS

A. Mobilization Area: For Work at facilities, an area, defined on the Contract Drawings, for Contractor staging and storage of construction equipment, tools, products, and spare parts.

1.5 WORK COVERED BY CONTRACT DOCUMENTS

A. The selected Contractor shall furnish all labor, materials, equipment, chemicals, and incidentals necessary to inspect, test, mechanically clean (including removal of debris and sediment via airlift or similar method outlined in Specification Section 35 15 53 – Relief Well Maintenance), and redevelop one or more relief wells, to reduce head losses and improve their performance. The wells shall be mechanically cleaned and re-developed to remove sediment, bacterial sludge, mineral encrustation, and clogging. The Contractor shall document the Work including measurements of water level, flow rate, and specific capacity, and video inspection, of each well before and after mechanical cleaning. This project is necessary in order to prevent relief well failure and provide proper drainage to ensure continued reliable operation of the Lake Conroe Dam.

1.6 CASH ALLOWANCES (NOT USED)

1.7 OWNER-FURNISHED PRODUCTS (NOT USED)

1.8 DOCUMENT MANAGEMENT SOFTWARE

A. Contractor and the Owner's Representative shall be given the applicable number of Document Management System user names and passwords.

B. Contractor shall use the Owner's internet based document management system to transmit its documents to the Owner's Representative, including but not limited to Requests for Information (RFIs), shop drawing submittals, applications for payment, and letters of correspondence. Refer to Specification Section 01 33 00 – Submittals. The document management software should be able to automatically notify all team members of a submittal upload regardless of the originator, i.e. contractor, Principal Architect/Engineer, Owner's Representative, or Owner. Notification of new uploads should go to all team members regardless if they are the Principal Architect/Engineer or not, i.e. sub-consultants for construction management & inspection, but are not tasked as the Principal Architect/Engineer.

C. A minimum of one (1) and a maximum of three (3) accounts on the document management system will be provided by the Owner. Additional accounts may be requested by the Contractor.

D. Each account will allow one (1) user to access the document management system. Training on the document management system will be provided by the Owner as requested by the Contractor at a mutually agreed upon date and location.

1.9 WORK SEQUENCE

A. Construct Work in phases during the construction period. Coordinate construction schedule and operations with the Owner's Representative. Subcontractors shall coordinate its activities and operations with the Contractor.

B. Construction of this project may require using multiple crews working concurrently in order to complete the project within the specified Contract Time. At no time will multiple crews be allowed to work in consecutive traffic control phases during construction.

C. Data for all facilities and utilities shown were taken from available plans, record drawings, and/or utility maps made available from several sources. Actual field locations of facilities and utilities may vary from that shown on the Drawings. Contractor shall make a complete and independent verification of utility locations prior to submittal of subsequent shop drawings. Unless otherwise approved by the Owner's Representative, work shall not continue at locations where there is a conflict with existing utilities.

1.10 WORK GUIDELINES

A. Maintain local driveway access to public schools, residential and commercial properties adjacent to work areas at all times. Provide temporary driveway access in accordance with Specification Section 01 14 19 – Use of Premises. Coordinate work and schedule with impacted business owners, schools, and residents in conjunction with the Owner's Representative, well in advance of commencing the Work in the area(s) of the impacted entities.

B. Site restoration at all crossings shall be performed immediately upon completion of the Work. Restoration shall be performed in accordance with all applicable Specification Sections and utility company requirements.

C. Hand dig within one (1) foot of underground service lines (public or private).

D. Contractor shall bear the sole responsibility for damage to existing utilities resulting from its construction activities. The Contractor shall be responsible for the repair of damaged utilities, at no additional cost to the Owner.

1.11 COORDINATION OF WORK

A. Coordinate activity schedule and extend full cooperation to other Contractors who have responsibilities either concurrent with, proceeding, or following this project's duration along the work site. Ensure availability of access to selected portions of this project area to others and provide appropriate information for planning purposes to other Contractors. No compensation or time extension will be allowed as a result of conflicting construction activities.

B. Comply with coordination requirements outlined in Specification Section 01 14 19 – Use of Premises.

C. Dial 811 to contact either Texas 811 or Lone Star 811 One-Call all three (3) One-Call centers in the state of Texas a minimum of seventy-two (72) hours prior to construction within twenty-five (25) feet of a private pipeline.

Contact numbers for such centers are as follows:

1. TESS (Texas) One Call (800) 344-8377.
2. Texas One-Call (800) 245-4545.

3. Texas (Lone Star) One Call (800) 669-8344.

D. Existing structures adjacent to the proposed alignment shall be closely monitored prior to, during, and for a length of time designated by Owner after construction is complete in all areas. Several conditions including, but not limited to, soil type, construction methods, weather conditions, surrounding construction, personnel experience, and supervision may impact the amount of ground movement within and surrounding the alignment. Contractor shall survey and adequately document the condition and elevation of existing structures adjacent to the proposed alignment.

E. Prevent overstress or damage of any structure and any part or member of it during construction. This applies to new and existing facilities, utilities, and structures affected by construction operations. Contractor shall monitor and record the effect of its construction operations on new and existing facilities, utilities and structures and provide engineered temporary supports and connections as required to assure the safety and stability of the same to prevent overstress of any part.

1.12 CONTRACTOR USE OF PREMISES

A. Comply with all requirements outlined in Specification Section 01 14 19 – Use of Premises.

1.13 CONTRACT CLARIFICATION

A. Should clarification of the Contract Documents be requested, request clarification before proceeding with Work by submitting a Request for Information (RFI). Such requests shall be preceded by a diligent investigation of the Contract Documents. Include evidence of such investigation(s) in all requests for clarification.

1.14 ALTERNATE CONSTRUCTION METHODS

A. Alternate construction means and methods will be permitted in accordance with applicable Contract Document details and specification at no additional cost to the Owner. Alternate construction means and methods shall provide a substantial benefit to the project and/or the Owner. Contractor accepts full responsibility for all additional costs of geotechnical investigations and other incidental items, including any re-design that may be necessary to permit the alternate construction means and methods.

B. Contractor shall submit the below listed modifications for alternate construction methods to the Owner's Representative for Principal Architect/Engineer and Owner's consideration. Submittal shall be made prior to commencement of any construction activity utilizing an alternate construction method. Contractor execution of alternate construction methods prior to its receiving Principal Architect/Engineer and Owner's approval shall be at the sole risk of the Contractor for removal and replacement at no additional cost to the Owner. The following modifications must also be signed and sealed by a Licensed Professional Engineer registered in the State of Texas prior to submittal to Owner's Representative.

   1. Proposed construction method and detailed plan of approach;
   2. Revisions to material or product specifications.

C. If alignment revisions are requested, Contractor shall immediately inform the Owner Representative of any proposed changes and any potential impacts the revised alignment may have on that portion of the transmission line segment and all adjacent line segments, existing or proposed.

1.15 UTILITY LINES

A. All utilities represented on the Drawings are shown as an approximate location and are based on the best information available during project design. Contractor shall field-verify the exact location of all utilities prior to commencing construction. The Contractor shall be responsible for any and all damage to these utilities, caused or resulting from their failure to locate, protect and/or maintain these utilities during construction.

1.16 WARRANTY

A. Comply with the warranty requirements stipulated in Contract Document General Conditions and the warranty requirements of the various specification sections of this project manual.

PART 2 - PRODUCTS (NOT USED)

PART 3 - EXECUTION (NOT USED)

END OF SECTION

THIS PAGE INTENTIONALLY LEFT BLANK

SECTION 01 14 19

USE OF PREMISES

PART 1 - GENERAL

1.1 SUMMARY

A. Section Includes:

1. Administrative and procedural requirements for:
    a. Contractor Responsibilities
    b. Temporary Utilities
    c. Limits of Construction
    d. Storage Sheds and Buildings
    e. Working Times
    f. Site Access Times
    g. Notification to Adjacent Occupants
    h. Safety Requirements
    i. First Aid Equipment
    j. Fire Protection
    k. Security Measures
    l. Protection of Utilities, Pipelines, and Property
    m. Surface Restoration
    n. Traffic Control and Use of Public Rights of Way
    o. Contractor’s Roads and Parking
    p. Coordination with Facility Owner’s Operations
    q. Contractor's Field Office
    r. Principal Architect/Engineer's Field Office
    s. Project Photographs
    t. Special Considerations Related to Adjacent Properties and Facilities
    u. Historical and Archaeological Sites

B. Related Specification Sections include but are not necessarily limited to:

1. Proposing Requirements, Contract Forms, and Conditions of the Contract.
2. Division 01 – General Requirements.

1.2 MEASUREMENT AND PAYMENT

A. Unit Price. No separate payment will be made for this item. Include the cost in associated items for this project.

1.3 SUBMITTALS

A. See Specification Section 01 33 00 – Submittals for the requirements for the mechanics and administration of the submittal process.

B. Contractors Safety Program.

C. Planning requests for temporary Owner's facility shutdowns.

1.4 CONTRACTOR RESPONSIBITIES

A. Comply with applicable requirements specified in other sections of Project Specifications.

B. Comply with project limits as shown in APPENDIX A – Supplemental Information Packet.

C. Comply with procedures for access to the site and Contractor's use of rights-of-way.

D. Completely remove materials and equipment when no longer required.

E. Restore existing facilities used for temporary services to original or better condition, or as specified.

1.5 TEMPORARY UTILITES

A. Obtaining Temporary Service:

1. Make arrangements with utility service companies for temporary services, unless provided by Owner.
2. Abide by rules and regulations of utility service companies and/or authorities/agencies/entities having jurisdiction.
3. Be responsible for utility service costs and permits until Work reaches final completion. Included services are fuel, power, light, heat, and any other utility services necessary for execution, completion, testing, and initial operation of Work.
4. Be responsible for providing approved metering devices, as necessary, for any temporary utilities.

B. Water:

1. Contractor is responsible for obtaining water required for performance of Work, specified tests of relief wells, equipment, devices, or other equipment, and for other uses as necessary. Owner will make available on-site source for water which may or may not be suitable for use for performance of Work.

Coordinate with Owner's representative on use of on-site water sources.

C. Electricity and Lighting:

1. Provide electrical service required for Work, including testing of Work. Provide power for lighting, operation of equipment, and other use as necessary.

D. Sanitary Facilities:

1. Provide and maintain sanitary facilities for persons on job site. Comply with regulations of State and local departments of health.
2. Enforce use of sanitary facilities by construction personnel at job site. Enclose sanitary facilities. Pit-type toilets will not be permitted. No discharge will be allowed from these facilities. Collect and store sewage and waste so as not to cause nuisance or health problem. Haul sewage and waste off-site and properly dispose of in accordance with all applicable regulations.
3. Locate toilets near Work site, within 500 feet of working activities for line work projects and secluded from view as best as possible. Keep toilets clean and supplied throughout course of Work. Locate toilets a minimum of 100 feet from all water wells.

1.6 LIMITS OF CONSTRUCTION

A. Construction operations and storage areas are limited to Owner's property, and/or the Limits of Construction or Construction Limits as indicated in APPENDIX A - Supplemental Information Packet, Project Limits Exhibit.

B. Unauthorized use of areas, or trespassing on land outside of defined limits, is not permitted.

C. Contractor shall not block access along gravel dam road or around maintenance facilities.

1.7 STORAGE SHEDS AND BUILDINGS

A. Provide adequately ventilated, watertight storage facilities with floor above ground level for protection of materials and equipment susceptible to weather damage.

B. Store materials in neat and orderly manner. Store materials and equipment to permit easy access for identification, inspection, and inventory.

C. Storage of materials not susceptible to weather damage may be on blocks off ground.

D. Storage of all fuels and chemicals shall be in designated areas by Contractor.

E. Refer to Specification Section 01 65 50 – Product Delivery, Storage, and Handling for additional requirements.

F. Avoid obstructing drainage ditches or inlets. When obstruction is unavoidable due to requirements of Work, provide grading and temporary drainage structures to maintain unimpeded drainage flow. Failure of the Contractor to maintain proper site drainage shall prohibit it from making a claim against the Owner for monetary or time damages due to drainage impacts.

1.8 WORKING TIMES

A. Construction shall be conducted during working hours as indicated in General Conditions of the Contract, unless otherwise amended by a supplemental specification or agreement to the General Conditions of the Contract, and approved by Owner.

1.9 SITE ACCESS TIMES

A. Contractor to coordinate all site access, including deliveries, outside of working hours with Owner's Representative. Neither Owner nor Owner's Representatives shall sign for any Contractor deliveries. Refer to Specification Section 01 65 50 – Product Delivery, Storage, and Handling.

B. Contractor shall coordinate with Owner to not interfere with Owner's facility operations.

C. Comply with access route as shown in APPENDIX A – Supplemental Information Packet, Project Access Exhibit.

D. Owner shall provide Contractor with at least one (1) gate clicker to be able to access project site.

1.10 NOTIFICATION OF ADJACENT OCCUPANTS (NOT USED)

1.11 SAFETY REQUIREMENTS

A. Beware of overhead power lines existing in area and in close proximity to project. When 10 feet of clearance between energized overhead power line and construction-related activity cannot be maintained, submit a request to the appropriate utility provider to de-energize or move conflicting overhead power line(s).

B. Submit Contractor's Safety Program in accordance with Specification Section 01 33 00 – Submittals. Include Site Safety and Site Security in accordance with General Conditions of the Contract.

C. Conduct operations in strict accordance with the Contractor's Safety Program, in accordance with applicable Federal, State, and local safety codes and statutes, and with good construction practice. Establish and maintain procedures for safety of all work, personnel, and equipment involved in Project.

D. Observe and comply with Texas Occupational Safety Act (Art. 5182a, V.C.S.) and with all safety and health standards promulgated by Secretary of Labor under Section 107 of Contract Work Hours and Standards Act, published in 29

CFR Part 1926 and adopted by Secretary of Labor as occupational safety and health standards under Williams-Steiger Occupational Safety and Health Act of 1970, and to other legislation enacted for safety and health of Contractor employees. Safety and health standards apply to subcontractors and their employees as well as to Contractor and its employees.

E. Observance of and compliance with regulations is solely and without qualification responsibility of Contractor without reliance or superintendence of or direction by the Owner or Owner's Representative. Immediately advise Owner's Representative of investigation or inspection by Federal Safety and Health Inspectors of Contractor or subcontractor's work or place of work on job site under this Contract, and after investigation or inspection, advise Owner's Representative of results. Submit one copy of accident reports to Owner's Representative within 10 days of occurrence.

F. Protect areas occupied by workmen using best available devices for detection of lethal and combustible gases. Test devices frequently to assure functional capability. Constantly observe infiltration of liquids into Work area for visual or odor evidences of contamination, and immediately take appropriate steps to seal off entry of contaminated liquids into Work area.

G. Implement safety measures, including but not limited to safety personnel, first-aid equipment, ventilating equipment, and other safety equipment, as specified or detailed on the Contract Drawings.

H. Maintain required coordination with Police and Fire Departments during entire period covered by Contract.

I. In safety plan, include project safety analysis. Itemize major tasks and potential safety hazards. Plan to eliminate hazards or protect workers and public from each hazard.

J. Provide safety briefings for all Contractor personnel, Owner, Principal Architect/Engineer, Owner's Representative, and subcontractor personnel authorized to be on the site.

1.12 FIRST AID EQUIPMENT

A. Provide first aid kit throughout construction period. List telephone numbers for hospitals, and ambulance services in each first aid kit.

B. Have at least one person thoroughly trained in first aid and cardiopulmonary resuscitation (CPR) procedures present on site whenever Work is in progress. Contractor to conform to protocols and requirements for training and protection against "blood borne pathogens."

1.13 FIRE PROTECTION

A. Conform to specified fire protection and prevention requirements established by Federal, State, or local governmental agencies and as provided in

Contractor's Safety Program.

1.14 SECURITY MEASURES

A. Protect all Work materials, equipment, and property from loss, theft, damage, and vandalism. Perform duty to protect property of the Owner used in connection with performance of Work.

B. If existing fencing or barriers are breached or removed for purposes of construction, provide and maintain temporary security fencing equal to existing.

1.15 PROTECTION OF UTILITIES, PIPELINES, AND PROPERTY

A. Utilize Utility Coordinating Committee One Call System (telephone number, (713) 223-4567), which must be called 48 hours in advance to locate utilities. Toll free telephone number is 1-800-669-8344, Texas (Lone Star) One Call System.

B. Prevent damage to existing utilities during construction. Utilities shown on Drawings are at approximate locations. Pre-locate, by whatever means may be required (metal detection equipment, probes, excavation, survey), underground utilities in the vicinity of Work. Perform investigative work and repairs required after investigation. Contractor is responsible for damages caused by failure to locate and preserve these underground utilities. No separate payment will be made for repair work.

C. Protect and prevent damage to existing crossing, parallel, and adjacent pipelines during construction.

D. Protection of the Work, and Public and Private Property

1. Take precautions, provide programs, and take actions necessary to protect the Work, and public and private property from damage.
2. Do not alter condition of properties adjacent to and along Limits of Construction.
3. Do not use ways, means, methods, techniques, sequences, or procedures that result in damage to adjacent properties or improvements.
4. Restore properties damaged by Contractor outside of designated Limits of Construction at no cost to Owner.
5. Take action to prevent damage, injury, or loss, including, but not limited to, the following:
   a. Store materials, supplies, and equipment in orderly, safe manner that will not interfere with progress of Work or work of others.
   b. Provide suitable storage for materials subject to damage by exposure to weather, theft, breakage, or otherwise.
   c. Place upon Work or any part thereof only safe loads.

d. Frequently clean up refuse, rubbish, scrap materials, and debris created by construction operations, keeping Project site safe and orderly.

e. Provide safe barricades and guard rails to protect pedestrian and vehicular traffic around openings, scaffolding, temporary stairs and ramps, excavations, elevated walkways, and other hazardous areas.

6. Assume full responsibility for preservation of public and private property on or adjacent to the Limits of Construction. When direct or indirect damage is done by or on account of any act, omission, neglect, or misconduct in execution of Work by Contractor, restore to condition equal to or better than that existing before damage was done.

7. Perform daily clean up in affected construction areas in order to restore site to existing or better conditions. Areas should be free of debris, scrap material, dirt, mud, and other items identified by Owner's Representative. Do not leave buildings, roads, streets, or other construction areas unclean. If deemed necessary by the Owner's Representative, Contractor shall employ street sweeping/cleaning equipment to maintain area streets.

E. Protection of Existing Structures:

1. Underground Structures:

a. Underground structures are defined to include, but not be limited to, sewer, water, gas, and other piping, manholes, boxes, chambers, electrical signal and communication conduits, tunnels, and other existing subsurface installations located within or adjacent to limits of Work.

b. Explore ahead of Work and sufficiently uncover obstructing underground structures to determine their location, to prevent damage to them, and to prevent interruption of utility services. Restore underground structures to original conditions at no additional cost if damaged during construction.

2. Surface Structures: Surface structures are defined as existing buildings, structures and other constructed installations above ground surface. Included with structures are their foundations and any extensions below the surface. Surface structures include, but are not limited to buildings, tanks, walls, bridges, roads, dams, channels, open drainage, piping, poles, wires, posts, signs, markers, curbs, walks, guard cables, fencing, and other facilities visible above ground surface.

3. Protection of Underground and Surface Structures:

a. Support in place and protect from direct or indirect damage underground and surface structures located within or adjacent to limits of Work.

b. Prevent overstress or damage to any structure and any part or member of structures during construction. This applies to new and existing facilities, utilities, and structures affected by construction operations.

1.16 SURFACE RESTORATION

A. Restore site to the condition which existed before construction, unless otherwise noted in Contract Documents.

1.17 TRAFFIC CONTROL AND USE OF PUBLIC RIGHTS OF WAY (NOT USED)

1.18 CONTRACTORS ROADS AND PARKING

A. Prevent interference with traffic on existing roads.

B. Construct and maintain temporary access roads and parking areas.

C. Designate temporary parking areas to accommodate Contractor's and Owner's Representative personnel. When site space is not adequate, provide additional off-site parking. Locate as approved by Owner's Representative.

D. Minimize use by construction traffic of existing streets and driveways.

E. Do not allow heavy vehicles or construction equipment in existing parking areas.

F. Do not inhibit the ability of the Owner's personnel to access, operate, and maintain existing facilities during construction.

G. Utilize access route as shown in APPENDIX A – Supplemental Information Packet, Project Access Exhibit.

1.19 COORDINATION WITH FACILITY OWNER'S OPERATIONS

A. Definition: A "shutdown" is when a portion of the normal operation of Owner's facility, whether equipment, systems, piping, or conduit, has to be temporarily suspended or taken out of service to perform the Work.

B. Work that may interrupt normal operations shall be accomplished at times convenient to, and approved by Owner.

C. Except for necessary shutdowns, perform the Work such that Owner's facilities remain in continuous satisfactory operation during the Project. Schedule and conduct the Work such that the Work does not:

1. Impede Owner's production or processes,
2. Create potential hazards to public health or wellbeing,
3. Create potential hazards to operating equipment and personnel,
4. Reduce the quality of Owner's facilities' product(s) or effluent, or
5. Cause odors or other nuisances.

D. Coordinate shutdowns with Owner. When possible, combine activities into a single shutdown to minimize impacts on Owner's operations and processes.

1.20 CONTRACTOR'S FIELD OFFICE

A. At Contractor's cost, and upon approval from Owner, Contractor may provide

their own field office and temporary facilities, parking areas, equipment and material storage areas. Contractor shall be responsible for all permits, permissions, leases, utilities and maintenance of its facilities. Contractor shall maintain his temporary facilities in a clean, neat and orderly manner. Facilities for the Owner's Representative will be provided by the Owner. All Contract and progress meetings will be held at the Owner's facilities as identified at the pre-construction conference.

B. Store materials in neat and orderly manner. Place materials and equipment to permit easy access for identification, inspection, and inventory.

1.21 PRINCIPAL ARCHITECT/ENGINEER'S FIELD OFFICE (NOT USED)

1.22 PROJECT PHOTOGRAPHS

A. Refer to Specification Section 01 32 36.01 – Project Photographs.

1.23 SPECIAL CONSIDERATIONS RELATED TO ADJACENT PROPERTIES AND FACILITIES

A. Maintain conditions of access road to site such that access is not hindered as the result of construction related deterioration.

1. Provide daily sweeping of hard-surface roadways to remove soils tracked onto roadway.

1.24 HISTORICAL AND ARCHAEOLOGICAL SITES

A. If, during the course of construction, evidence of deposits of historical or archeological interest are found, the Contractor shall cease operations affecting the find and shall notify Owner.

1. No further disturbance of the deposits shall ensue until the Contractor has been notified by Owner that Contractor may proceed.
2. Owner will issue a notice to proceed after appropriate authorities have surveyed the find and made a determination to Owner.
3. Compensation to the Contractor, if any, for lost time or changes in construction resulting from the find shall be determined in accordance with changed or extra work provisions of the Contract Documents.

B. Refer to Specification General Conditions of the Contract including paragraph 4.2.4.

PART 2 - PRODUCTS (NOT USED)

PART 3 - EXECUTION

3.1 MAINTENANCE

A. Maintain temporary facilities in a clean, neat, and orderly manner including maintenance of all-weather surface driveway and parking areas, buildings and furnishings, and equipment or materials furnished and supplied as part of any temporary field office or storage yard for duration of Contract.

B. Remove any field office provided under this contract from site upon acceptance of the entire work by the Owner.

END OF SECTION

SECTION 01 22 00

UNIT PRICES

PART 1 - GENERAL

1.1 SUMMARY

A. Section Includes

1. Authority
2. Unit Quantities Specified
3. Measurement
4. Payment Plus Conditions
5. Nonconformance Assessment
6. Nonpayment for Rejected Products

B. Related Specification Sections include but are not necessarily limited to:

1. Proposing Requirements, Contract Forms, and Conditions of the Contract.
2. Division 01 – General Requirements.

1.2 MEASUREMENT AND PAYMENT

A. Measurement:

1. Measurement by Area: Measured by square dimension using mean length and width or radius.
2. Stipulated Price Measurement: By unit designated in Agreement.
3. Other: Items measured by weight, volume, area, or linear means or combination, as appropriate, as completed item or unit of Work.
4. Measurement by Each: Measured by each instance or item provided.
5. Measurement by Lump Sum: Measure includes all associated work.

B. Payment:

1. Payment Includes: Full compensation for required supervision, labor, products, tools, equipment, plant, transportation, services, and incidentals; and erection, application or installation of an item of Work; and Contractor's overhead and profit.
2. Total compensation for required Unit Price Work shall be included in Unit Price provided in Proposal. Claims for payment as Unit Price Work, but not specifically covered in list of unit prices contained in Proposal, will not be accepted.
3. Interim payments for stored materials will be made only for materials to be incorporated under items covered in unit prices, unless disallowed in Supplementary Conditions.

4. Progress payments will be based on Owner's Representative's observations and evaluations of quantities incorporated in Work multiplied by unit price.
5. Final payment for Work governed by unit prices will be made on basis of actual measurements and quantities determined by Owner's Representative multiplied by unit price for Work which is incorporated in or made necessary by the Work.

1.3 SUBMITTALS (NOT USED)

1.4 AUTHORITY

A. Measurement methods delineated in Specification sections are intended to complement criteria of this section. In event of conflict, the order of governance is: General Conditions, Individual Specifications, 01 22 00 – Unit Prices.

B. Owner's Representative will take measurements and compute quantities accordingly.

C. Assist by providing necessary equipment, workers, and survey personnel.

1.5 UNIT QUANTITIES SPECIFIED

A. Quantity and measurement estimates stated in Agreement are for contract purposes only. Quantities and measurements supplied or placed in Work and verified by Owner's' Representative (GCs 11.6.2) shall determine payment as stated in General Conditions of the Contract.

B. When actual Work requires greater or lesser quantities than those quantities indicated in Bid/Proposal, provide required quantities at unit prices contracted as stated in General Conditions of the Contract.

1.6 NONCONFORMANCE ASSESSMENT

A. Remove and replace Work, or portions of Work, not conforming to Contract Documents.

B. When not practical to remove and replace Work, Owner's Representative will direct one of the following remedies:

1. Nonconforming Work will remain as is, but Unit Price will be adjusted lower at discretion of Owner's Representative.
2. Nonconforming Work will be modified as authorized by Owner's Representative, and Unit Price will be adjusted lower at discretion of Owner's Representative, when modified Work is deemed less suitable than specified.

C. Specification sections may modify above remedies or may identify a specific formula or percentage price reduction.

D. Authority of Owner's Representative to assess nonconforming work and identify payment adjustment is final.

1.7 NONPAYMENT FOR REJECTED PRODUCTS

A. Payment will not be made for the following:

1. Products wasted or disposed of in unacceptable manner.
2. Products determined as nonconforming before or after placement.
3. Products not completely unloaded from transporting vehicle.
4. Products placed beyond lines and levels of required Work.
5. Products remaining on hand after completion of Work, unless specified otherwise.
6. Loading, hauling, and disposing of rejected products.

PART 2 - PRODUCTS (NOT USED)

PART 3 - EXECUTION (NOT USED)

END OF SECTION

THIS PAGE INTENTIONALLY LEFT BLANK

SECTION 01 25 13

PRODUCT SUBSTITUTIONS

PART 1 - GENERAL

1.1 SUMMARY

A. Section Includes:

1. The procedure for requesting the approval of substitution of a product that is not equivalent to a product which is specified by descriptive or performance criteria or defined by reference to one or more of the following:

   a. Name of manufacturer.

   b. Name of vendor.

   c. Trade name.

   d. Catalog number.

2. Substitutions are not "or-equals".

B. Related Specification Sections include but are not necessarily limited to:

1. Proposing Requirements, Contract Forms, and Conditions of the Contract.

2. Division 01 – General Requirements.

C. Request for Substitution – General:

1. Base all bids on materials, equipment, and procedures specified.

2. Certain types of equipment and kinds of material are described in specifications by means of references to names of manufacturers and vendors, trade names, or catalog numbers.

   a. When this method of specifying is used, it is not intended to exclude from consideration other products bearing other manufacturer's or vendor's names, trade names, or catalog

numbers, provided said products are "or-equals," as determined by Owner's Representative.

3. Other types of equipment and kinds of material may be acceptable substitutions under the following conditions:
   a. Or-equals are unavailable due to strike, discontinued production of products meeting specified requirements, or other factors beyond control of Contractor; or,
   b. Contractor proposes a cost and/or time reduction incentive to the Owner.

1.2 MEASUREMENT AND PAYMENT

A. Unit Price. No separate payment will be made for this item. Include the cost in associated items for this project.

1.3 SUBMITTALS (NOT USED)

1.4 QUALITY ASSURANCE

A. In making request for substitution or in using an approved product, Contractor:
   1. Has investigated proposed product, and has determined that it is adequate or superior in all respects to that specified, and that it will perform function for which it is intended.
   2. Will provide same guarantee for substitute item as for product specified.
   3. Will coordinate installation of accepted substitution into Work, to include building modifications if necessary, making such changes as may be required for Work to be complete in all respects.
   4. Waives all claims for additional costs related to substitution which subsequently arise.

1.5 DEFINITIONS

A. Product: Manufactured material or equipment.

1.6 PROCEDURE FOR REQUESTING SUBSTITUTION

A. Substitution shall be considered only:
   1. After award of Contract.
   2. Under the conditions stated herein.
B. Written request through Contractor only.
C. Transmittal Mechanics:

1. Follow the transmittal mechanics prescribed for Shop Drawings in Specification Section 01 33 00 – Submittals.
    a. Product substitution will be treated in a manner similar to "deviations," as described in Specification Section 01 33 00 – Submittals.
    b. List the letter describing the deviation and justifications on the transmittal form in the space provided under the column with the heading DESCRIPTION.
        1) Include in the transmittal letter, either directly or as a clearly marked attachment, the items listed in the following paragraph below.

D. Transmittal Contents:
1. Product identification:
    a. Manufacturer's name.
    b. Telephone number and representative contact name.
    c. Specification Section or Drawing reference of originally specified product, including discrete name or tag number assigned to original product in the Contract Documents.
2. Manufacturer's literature clearly marked to show compliance of proposed product with Contract Documents.
3. Itemized comparison of original and proposed product addressing product characteristics including but not necessarily limited to:
    a. Size.
    b. Composition or materials of construction.
    c. Weight.
    d. Electrical or mechanical requirements.
4. Product experience:
    a. Location of past projects utilizing product.
    b. Name and telephone number of persons associated with referenced projects knowledgeable concerning proposed product.
    c. Available field data and reports associated with proposed product.
5. Data relating to changes in construction schedule.
6. Data relating to changes in cost.
7. Samples:
    a. At request of Owner’s Representative.
    b. Full size if requested by Owner’s Representative.

c. Held until substantial completion.

d. Owner's Representative not responsible for loss or damage to samples.

1.7 APPROVAL OR REJECTION

A. Written approval or rejection of substitution given by the Owner's Representative, Principal Architect/Engineer, and the Owner.

B. Owner's Representative reserves the right to require proposed product to comply with color and pattern of specified product if necessary to secure design intent.

C. In the event the substitution is approved, the resulting cost and/or time reduction will be documented by Change Order in accordance with the General Conditions.

D. Substitution will be rejected if:

1. Submittal is not through the Contractor with his stamp of approval.
2. Request is not made in accordance with this Specification Section.
3. In Owner's Representative opinion, acceptance will require substantial revision of the original design.
4. In the Owner's Representative opinion, substitution will not perform adequately the function consistent with the design intent.

E. Contractor shall reimburse Owner for the cost of the Owner's Representative evaluation whether or not substitution is approved.

PART 2 - PRODUCTS (NOT USED)

PART 3 - EXECUTION (NOT USED)

END OF SECTION

SECTION 01 26 63

CHANGE ORDERS

PART 1 - GENERAL

1.1 SUMMARY

A. Section Includes:

Procedures for processing Change Orders, including:

1. Quality Assurance.
2. Responsible Individual.
3. Documentation of Change in Contract Price and Contract Time.
4. Change Procedures.
5. Proposals and Contract Modifications.
6. Work Change Directive.
7. Change Order.
8. Execution of Change Documentation.
9. Correlation of Contractor Submittals.

B. Related Specification Sections include but are not necessarily limited to:

1. Proposing Requirements, Contract Forms, and Conditions of the Contract.
2. Division 01 – General Requirements.

1.2 QUALITY ASSURANCE

A. Reference Standards:

1. Equipment Rental Rates: equipmentwatch.com. Rental Rate is defined as full unadjusted base rental rate for appropriate item of construction equipment.

1.3 RESPONSIBLE INDIVIDUAL

A. Provide letter to the Owner's Representative indicating name, title, address and contact information of individual authorized to execute change documents and who is responsible for informing others in Contractor's employ and Subcontractors of changes to the Work. Information should be provided at the

Preconstruction Conference but, no later than 10 calendar days following the Preconstruction Conference.

1.4 DOCUMENTATION OF CHANGE IN CONTRACT PRICE AND CONTRACT TIME

A. Maintain detailed records of changes in Work. Provide full information required for identification and evaluation of proposed changes, and substantiate costs of changes in Work.

B. Document each proposal for change in cost or time with sufficient data to allow evaluation of proposal. Provide additional information upon request of the Owner or the Owner's Representative.

C. Proposals shall include the following minimum information:

1. Quantities of items in original Proposal with additions, reductions, deletions, and substitutions.
2. Quantities and cost of items in original schedule of values with additions, reductions, deletions, and substitutions.
3. Provide unit prices for items not included in original Proposal with supporting information when absent from original Proposal Work.
4. Justification for changes in Contract Time.
5. Additional data upon request.

1.5 CHANGE PROCEDURES

A. Changes to Contract Price or Contract Time can only be made by issuance of Change Order. Issuance of Work Change Directive will be formalized into a Change Order. Changes will be in accordance with requirements of the General Conditions.

B. The Owner's Representative will advise of minor changes in Work not involving an adjustment to Contract Price or Contract Time as authorized by the General Conditions by issuing supplemental instructions.

C. Request clarification of Drawings, Specifications, Contract Documents, or other information by using Request for Information. Response by the Owner's Representative to Requests for Information does not authorize Contractor to perform tasks outside scope of Work. Changes must be authorized as described in this section.

1.6 PROPOSALS AND CONTRACT MODIFICATIONS

A. The Owner or the Owner's Representative may issue a Request for Proposal (RFP), which includes detailed description of proposed change with supplementary or revised Drawings and Specifications. The Owner or the Owner's Representative may also request a proposal in response to a Request for Information. Prepare and submit proposal within 7 days or as specified in the request.

B. Submit request for Contractor changes to Owner's Representative describing proposed change and its full effect on Work, with a statement describing reason

for change and effect on Contract Price and Contract Time including full documentation.

C. The Owner may use the Principal Architect/Engineer to review Change Orders.

1.7 WORK CHANGE DIRECTIVE

A. The Owner may issue a signed Work Change Directive instructing Contractor to proceed with a change in Work. Work Change Directive will subsequently be incorporated in Change Order.

B. Document will describe changes in Work and designate method of determining change in Contract Price or Contract Time.

C. Proceed promptly to execute changes in Work in accordance with Work Change Directive.

1.8 CHANGE ORDER

A. Stipulated Price Change Order

1. Stipulated Price Change Order will be based on accepted proposal.

B. Unit Price Change Order

1. Where Unit Prices for affected items of Work are included in Proposal, unit price Change Order will be based on unit prices, subject to the General Conditions.
2. Where unit prices of Work are not pre-determined in Proposal, Work Change Directive or accepted proposal will specify unit prices to be used.

C. Time-and-Material Change Order

1. Provide itemized account and supporting data after completion of change, within time limits indicated for claims in the General Conditions.
2. The Owner will determine change allowable in Contract Price and Contract Time as provided in the General Conditions.
3. Maintain detailed records of work done on time-and-material basis as specified in paragraph 1.4, Documentation of Change in Contract Price and Contract Time.
4. Provide full information required for evaluation of changes and substantiate costs for changes in Work.

1.9 EXECUTION OF CHANGE DOCUMENTATION

A. The Owner or the Owner's Representative will issue Change Orders, Work Change Directives, or accepted proposal for signatures of parties as described in the General Conditions.

1.10 CORRELATION OF CONTRACTOR SUBMITTALS

A. For Stipulated Price Contracts, promptly revise Schedule of Values and Application for Payment forms to record authorized Change Orders as separate line item.

B. For Unit Price Contracts, next monthly estimate of Work after acceptance of a Change Order will be revised to include new items not previously included and appropriate unit rates.

C. Promptly revise progress schedules to reflect change in Contract Time, and to adjust time for other items of work affected by change, and resubmit for review.

D. Promptly enter changes to on-site and record copies of Drawings, Specifications, or Contract Documents.

PART 2 - PRODUCTS (NOT USED)

PART 3 - EXECUTION (NOT USED)

END OF SECTION

SECTION 01 29 73

SCHEDULE OF VALUES

PART 1 - GENERAL

1.1 SUMMARY

A. Section Includes

1. Measurement and Payment
2. Definition
3. Preparation
4. Submittal

B. Related Specification Sections include but are not necessarily limited to:

1. Proposing Requirements, Contract Forms, and Conditions of the Contract.
2. Division 01 – General Requirements.

1.2 MEASUREMENT AND PAYMENT

A. Unit Price. No separate payment will be made for this item. Include the cost in associated items for this project.

1.3 SUBMITTALS

A. Submit Schedule of Values in accordance with requirements of Section 01 33 00 – Submittals. Submit at least 10 days prior to submitting first application for progress payment. Submit via the Owner's Document Management System.

B. Revise Schedule of Values and resubmit for items affected by contract modifications, Change Orders, and Work Change Directives. After changes are reviewed without exception by Authority's Principal Architect/Engineer, make submittal at least 10 days prior to submitting next application for progress payment.

1.4 DEFINITIONS

A. Schedule of Values: Is a schedule, prepared and maintained by the Contractor, allocating portions of the Contract Amount to various portions of the Work, including a tabulation of all of the costs of the various Subcontracts and materials which in the aggregate make up the Cost of the Work. The Schedule of Values shall be subject to Owner's approval and, after such approval, be used as the basis for reviewing the Contractor's Application For Payment.

B. Break down costs to list major products or operations for each line item which has an installed value of more than $5000.

1.5 PREPARATION

A. For stipulated price contracts, subdivide Schedule of Values into logical portions of Work, such as major work items or work in contiguous geographic areas.

B. Schedule and Schedule of Values shall be developed together. At a minimum, the Schedule of Values shall be broken out by trade and split between materials and labor as approved by the Owner. Such Prices will include overhead and profit applicable to each item of work.

C. Round off figures for each listed item to nearest $100 except for value of one item, when necessary, to make total of items in Schedule of Values equal Contract Price for stipulated price contracts or lump sum amount in Schedule of Unit Price Work.

D. Submit Schedule of Values in approved electronic spreadsheet, formatted to print on 11” x 17” paper, to the Owner’s Document Management System.

PART 2 - PRODUCTS (NOT USED)

PART 3 - EXECUTION (NOT USED)

END OF SECTION

SECTION 01 32 16

CONSTRUCTION PROGRESS SCHEDULE

PART 1 - GENERAL

1.1 SUMMARY

A. Section Includes:

1. Specific requirements for the preparation, submittal, updating, status reporting and management of the construction Progress Schedule.

B. Provide Construction Schedules for Work included in Contract in accordance with requirements in this Section. Create Construction Schedule using Critical Path Method (CPM) computer software capable of mathematical analysis of Precedence Diagramming Method (PDM) plans. Provide printed activity listings and bar charts in formats described in this Section.

C. Combine activity listings and bar charts with narrative report to form Construction Schedule submittal for Owner and the Owner's Representatives.

D. Related Specification Sections include, but are not necessarily limited to:

1. Proposing Requirements, Contract Forms and Conditions of the Contract.
2. Division 01 - General Requirements.

1.2 MEASUREMENT AND PAYMENT

A. No separate payment will be made for this item. Include the cost of construction scheduling in overhead cost for this project.

1.3 SCHEDULING STAFF

A. Employ or retain services of individual experienced in critical path scheduling for duration of Contract. Individual shall cooperate with Owner's Representative

and shall update schedule (Progress Schedule) monthly as required by the Contract's General Conditions, to indicate current status of Work.

1.4 QUALITY ASSURANCE

A. The person preparing and revising the construction Progress Schedule shall be experienced in the preparation of schedules of similar complexity.

B. Within five (5) days from award of the Contract, Contractor shall submit to Owner's Representative the name of the person responsible for the preparation, maintenance, updating and revision of all schedules.

1. Qualifications necessary:

   a. At least five (5) years verifiable experience in the preparation and updating of complex construction schedules for projects of similar type, size and complexity.

   b. Proficient in the use of the latest edition of Microsoft© Project® .

1.5 DEFINITIONS

A. The following definitions shall apply to this Specification Section:

1. BASELINE SCHEDULE: The initial as-bid, detailed, cost and resource loaded Progress Schedule prepared by the Contractor to define its plan for constructing the Project as required by the Contract Documents, and accepted by the Owner or Owner's Representative as meeting the requirements of the Contract Documents for specified constraints, sequences, milestones and completion dates.

2. PROGRESS SCHEDULE: The initially accepted Baseline Schedule, or subsequently approved Revised Baseline Schedules, updated each month to reflect actual start and finish dates of schedule activities and all time impact events whether caused by Contractor or Owner or factors beyond the control of either party.

3. REVISED BASELINE SCHEDULE: The initially accepted Baseline Schedule revised to reflect only approved changes.

4. WORKING SCHEDULE: A schedule developed from the Progress Schedule, utilizing scheduling software features not allowed for Baseline and Progress Schedules at the Contractor's sole discretion, to indicate the Contractor's plan for executing the Work, and providing for schedule recovery when approved time extensions are not sufficient to provide for

timely completion due to Contractor inefficiencies beyond the control of the Owner or outside the risks accepted by the Owner.

1.6 SUBMITTALS

A. Shop Drawings:

1. See Specification Section 01 33 00 – Submittals for requirements for the mechanics and administration of the submittal process.
2. Scheduler qualifications.
3. Baseline Schedule: Submitted within 30 days after Effective Date of Agreement.
4. Monthly Progress Schedules.
5. Revised Baseline Schedules.
6. Working Schedules.
7. Look-Ahead Schedules.

1.7 GENERAL REQUIREMENTS

A. Contractor shall prepare and submit Baseline and Progress Schedules and updates and revisions to them as specified herein.

1. All scheduling to be performed in the latest edition of Microsoft© Project®.
2. The Baseline and Progress Schedules shall be a calendar day-based and cost-loaded Critical Path Method (CPM) network diagram with supporting data.

B. Disallowed Scheduling Software Features:

1. The following specific features are not allowed to be applied in the Baseline and Progress Schedules:
   a. Resource leveling.
   b. Activity or event constraints, other than those specified by the Contract Documents.
   c. Leads and lags:
      1) Create specific activities with specific durations in-lieu-of leads and lags.
      2) Durations shall have positive values.
   d. Default progress data:
      1) Start and finish dates shall not be automatically updated.
      2) Update with actual start and finish dates documented from field reports.
      3) Work activities shall be updated by actual Work progression, not cash flow driven.

4) Updating of activity percent complete and remaining duration shall be independent functions, not one parameter calculated from the other.

5) Out-of-sequence progress shall be accounted for through retained logic, not a default option of progress override.

e. Multiple calendars.

2. Any float suppression techniques or other software features that corrupts the pure mathematical model calculating the critical path.

a. The following CPM schedule outputs will be rejected without further review:

1) Schedules indicating the start of the critical path at a date point or activity beyond the date of Notice to Proceed, or schedules indicating a discontinuous critical path from Notice to Proceed to Contract completion.

2) Schedules defining critical activities as those on a path or paths having some minimum value of float.

3) Schedules with multiple critical paths.

4) Schedules indicating a completion date beyond the contractual completion date.

3. Contractor, at Contractor's sole discretion, may employ the disallowed scheduling software features for Contractor's exclusive use in preparing a Working Schedule.

C. Float Time:

1. Neither the Owner nor the Contractor owns the float; the project owns the float.

2. As such, liability for delay of the project completion date rests with the party actually causing delay to the project completion date.

D. By preparing and submitting the Baseline Schedule, the Contractor represents that it can and intends to execute the Work and portions thereof within the

specified times and constraints and that its bid covers the costs associated with the execution of the Work in accordance with the Construction Schedule.

E. Contractor shall provide an electronic pdf for the Baseline Schedule and Progress Schedule and all monthly updates of both to accompany the schedules and tabular reports.

1. Electronic submittal shall be in a format compatible with the latest edition of Microsoft© Project®.
2. Contractor shall provide with the schedules, a procedural outline of the system shut-downs and proposed tie-ins, and the Owner's O&M staff, which shall be subject to approval of the Owner.

1.8 SUBMITTAL PACKAGES

A. Baseline Schedule:

1. CPM time-scaled network diagram:
   a. Minimum sheet size: 11 IN x 17 IN.
   b. Upload electronic version (pdf) to Owner’s Document Management System
2. Supporting data:
   a. A list of project activities including the following:
      1) Holidays that will be observed during construction.
      2) Number of planned working days and shifts per week.

B. Monthly updates that include the following:

1. Narrative Schedule Report.
2. Revised Baseline Schedule as appropriate.
   a. Update to reflect approved Change Orders occurring since the prior update.
   b. If no new approved Change Orders since prior update, provide a narrative report indicating such, and acknowledging the pertinence of the previously approved Baseline Schedule.
3. Updated Progress Schedule.
4. Explanation of changes in logic, duration of activities.
5. Upload electronic version (pdf) to Owner’s Document Management System.

C. Look-Ahead Rolling Schedule:

1. A four-week rolling schedule shall be provided by the Contractor at each progress meeting.

a. The schedule shall provide an accurate representation of the work performed the previous week and work planned for the current week and subsequent two (2) weeks.

2. The schedule shall be provided in a tabular format with bars representing work duration.
   a. The schedule shall refer to activity ID numbers on the Baseline and Progress Schedules.
   b. Activities that are on the critical path and activities that are behind schedule shall be noted by color, highlight, or underscore.
3. Derived from the Working Schedule, if applicable.

D. Narrative Schedule Report:

1. Schedule reports for Initial Baseline and Revised Baseline Schedules shall include the following minimum data for each activity:
   a. Preceding and succeeding activities.
   b. Activity description and number.
   c. Durations of activities:
      1) Original durations.
      2) Remaining durations.
   d. Earliest start date (by calendar date).
   e. Earliest finish date (by calendar date).
   f. Actual start date (by calendar date).
   g. Actual finish date (by calendar date).
   h. Latest start date (by calendar date).
   i. Latest finish date (by calendar date).
   j. Float.
   k. Percentage of activity completed.
   l. Activity constraints specified by the Contract Documents.
   m. Type of Tabulation (Initial or Updated).
   n. Project Duration.
   o. Project Contractual Completion Date.
   p. The date of commencement of the Work as stated in the Notice to Proceed.
   q. If an updated (revised) schedule, cite the new project completion date and project status and date of revision.

2. Shall be organized in the following sequence with all applicable documents included:
   a. Contractor's transmittal letter.
   b. Work completed during the period.
   c. Identification of unusual conditions or restrictions regarding labor, equipment or material.
   d. Description of the current critical path.
   e. Changes to the critical path and scheduled completion date since the last schedule submittal.
   f. Description of problem areas.
   g. Current and anticipated delays:
      1) Cause of delay.
      2) Impact of delay on other activities, milestones and completion dates.
      3) Corrective action and schedule adjustments to correct the delay.
   h. Pending items and status thereof:
      1) Permits.
      2) Change orders.
      3) Time adjustments.
      4) Non-compliance notices.
   i. Reasons for an early or late scheduled completion date in comparison to the contract completion date.

1.9 START-UP, DEMONSTRATION, TRAINING, AND FINAL COMPLETION (NOT USED)

1.10 SCHEDULING CONFERENCE (NOT USED)

1.11 BASELINE SCHEDULE

A. Schedule shall include, but not be limited to, activities that show the following that are applicable to the project:
   1. Project characteristics, salient features, or interfaces, including those with outside entities that could affect time of completion.
   2. Project start date, scheduled completion date and other milestones.
   3. Work performed by Contractor, subcontractors and suppliers.
   4. Submittal development, delivery, review and approval, including those from Contractor, subcontractors and suppliers.
   5. Procurement, delivery, installation and testing of materials, plants and equipment.

6. Testing and settlement periods.
7. Utility notification and relocation.
8. Erection and removal of falsework and shoring.
9. Finish work and final cleanup.
10. Project float as the predecessor activity to the scheduled completion date.

B. Schedule shall have not less than 10 activities, unless otherwise authorized by the Owner's Representative.

1. The number of activities shall be sufficient to assure adequate planning of the project, to permit monitoring and evaluation of progress, and to do an analysis of time impacts.
2. Schedule activities shall include the following:
   a. A clear and legible description.
   b. Start and finish dates.
   c. A duration of not less than one (1) working day, except for event activities, and not more than 30 working days, unless otherwise authorized by the Owner's Representative.
   d. At least one (1) predecessor and one (1) successor activity, except for project start and finish milestones.
   e. Required constraints: Only contractually required constraints may be inserted into the Baseline Schedule.
   f. Codes for responsibility, stage, work shifts, location and contract pay item numbers.

C. Early Completion Time:

1. Contractor may show early completion time on any schedule provided that the requirements of the contract are met.
2. Contractor may increase early completion time by improving production, reallocating resources to be more efficient, performing sequential activities concurrently or by completing activities earlier than planned.

D. Working durations shall be planned to incorporate the effects of normal weather impacts. See General Conditions Article 12.2 for the "Baseline Rain Day Determination".

1.12 PROGRESS SCHEDULE

A. Develop Progress Schedule based on approved Baseline and Revised Baseline Schedules.

1. All restrictions on use of constraints, leads and lags, resource leveling, etc., shall also apply to Progress Schedules.

B. The Progress Schedule will be updated once per month for monitoring progress.

   1. Contractor may submit one (1) additional update per month for its own convenience.

C. Indicate progress by making entries on the most recently accepted version of the network diagram and supporting data to show:

   1. Activities completed.
   2. Activities started.
   3. Remaining duration for each activity started but not yet completed.
   4. Percent complete based on value of work in place and value of equipment or material delivered and properly stored.
   5. Status of activity due to be completed by the next scheduled progress meeting.

D. Computerized Progress Schedule and percent completion of Work shall be used to verify Contractor's payment requests.

   1. Progress payments will not be processed by the Owner’s Representative unless the updated Progress Schedule has been submitted concurrently with a pay request and found acceptable by the Owner’s Representative.

1.13 REVISIONS TO PROGRESS SCHEDULE

A. Contractor shall submit data for a revised Progress Schedule within five (5) days of the occurrence of any of the following:

   1. When contractor-caused delay in completion of any activity or group of activities indicates an overrun of the Contract Time or Control Dates by 30 working days or 10 percent of the remaining duration, whichever is less.
   2. When delays in submittals, deliveries, or work stoppages are encountered making necessary the replanning or rescheduling of the Work.
   3. When the schedule does not represent the actual progress of the Work.
   4. When a change order significantly affects the contract completion date.

B. The revised Progress Schedule shall be the basis of a Working Schedule showing:

   1. How Contractor intends to return to schedule.
   2. How Contractor intends to avoid falling behind schedule on future activities.

C. Show changes on the network diagram and supporting data including:

   1. New activities and their duration.
   2. Modifications to existing activities.

D. Provide written narrative report as needed to define:

1. Problem areas, anticipated delays, and impact on the current schedule.
2. Corrective action recommended, and its effect.
3. Major changes in scope.
4. Revised projections of progress and completion.

E. Except as provided in the following subparagraphs 1 and 2, the cost of revisions to the Progress Schedule resulting from changes in the Work shall be included in the cost for the change in the Work, and shall be based on the complexity of the revision or Change Order, man-hours expended in analyzing the change, and the total cost of the change.

1. The cost of revision to the Construction Schedule not resulting from authorized changes in the Work shall be the responsibility of the Contractor.
2. The cost of revision to the Construction Schedule for the Contractor's convenience shall be the responsibility of the Contractor.

F. The revised network diagram and supporting data for the Progress Schedule shall be submitted to the Owner’s Representative upon completion of the revisions, but not later than the next progress meeting.

G. Revisions to the Progress Schedule for the Contractor's convenience:

1. Must be approved by the Owner’s Representative before Contractor changes the sequence of Work.

1.14 TIME IMPACT ANALYSIS (TIA)

A. The accepted initial Baseline Schedule or subsequently accepted Revised Baseline Schedule shall be used for TIA.

B. Contractor shall submit a written TIA to the Owner’s Representative with each request for adjustment of Contract Time, or when Contractor or Owner’s Representative consider that an approved or anticipated change may impact the critical path or contract progress.

1. The TIA must be attached to any change order prior to approval of any change to time or cost.

C. The TIA shall illustrate the impacts of each change or delay on the current scheduled completion date or internal milestone, as appropriate.

1. The analysis shall use the Baseline or Revised Baseline Schedule (accepted Baseline Schedule) that has a data date closest to and prior to the event.
2. If the Owner’s Representative determines that the accepted Baseline Schedule used does not appropriately represent the conditions prior to the event, the accepted Baseline Schedule shall be updated to the day before the event being analyzed.
3. The TIA shall include an impact schedule developed from incorporating the event into the accepted Baseline Schedule by adding or deleting activities,

or by changing durations or logic of existing activities as appropriate to the nature of the change event.

4. If the impact schedule shows that incorporating the event modifies the critical path and scheduled completion date of the accepted Baseline Schedule, the difference between scheduled completion dates of the two (2) schedules shall be equal to the adjustment of Contract Time.

D. Contractor shall submit a TIA in duplicate within 15 working days of receiving a written request for a TIA from the Owner's Representative.

1. Contractor shall allow the Owner's Representative two (2) weeks after receipt to approve or reject the submitted TIA.
2. All approved TIA schedule changes shall be shown on the next update schedule.

E. In the event of a TIA rejection:

1. If a TIA submitted by the Contractor is rejected by the Owner's Representative, the Contractor shall meet with the Owner's Representative to discuss and resolve issues related to the TIA.
2. If agreement is not reached, the Contractor will be allowed 15 days from the meeting with the Owner's Representative to give notice.
3. Contractor shall only show actual as-built work, not unapproved changes related to the TIA, in subsequent update schedules.
4. If agreement is reached at a later date, approved TIA schedule changes shall be shown on the next update schedule.
5. Owner's Representative will withhold remaining payment on the schedule contract item if a TIA is requested by Owner's Representative and not submitted by Contractor within 15 working days.
6. The schedule item payment will resume on the next estimate after the requested TIA is submitted.

   a. No other contract payment will be retained regarding TIA submittals.

1.15 NARRATIVE SCHEDULE REPORT

A. Narrative Schedule Report shall list Activities Started This Month; Activities Completed This Month; Activities Continued This Month; Activities Scheduled To Start or Complete Next Month; Problems Encountered This Month; Actions Taken to Solve These Problems.

B. Narrative Schedule Report shall describe changes made to Construction Schedule Logic (i.e., changes in Predecessors and Lags); Activities Added to Schedule; Activities Deleted from Schedule; any other changes made to Schedule other than addition of Actual Start Dates and Actual Finish Dates and

changes of Data Date and Remaining Durations for recalculation of mathematical analysis.

PART 2 - PRODUCTS (NOT USED)

PART 3 - EXECUTION (NOT USED)

END OF SECTION

SECTION 01 32 36.01

PROJECT PHOTOGRAPHS

PART 1 - GENERAL

1.1 SUMMARY

A. Section Includes:

1. Technical and submittal requirements for project photographs, including:

   a. Measurement and Payment

   b. Project photographs for facility projects. Facility projects may have one or more distinct sites.

B. Related Specification Sections include but are not necessarily limited to:

1. Proposing Requirements, Contract Forms, and Conditions of the Contract.

2. Division 01 - General Requirements.

1.2 MEASUREMENT AND PAYMENT

A. No separate payment will be made for this item. Include the cost in associated items for this project.

1.3 DEFINITIONS:

1. Pre-construction Photographs: Photographs taken, in sufficient numbers and detail, prior to beginning field activities, to show original construction site conditions.

2. Progress Photographs: Photographs, taken throughout the duration of construction at regular intervals from vantage points, approved by the Owner's Representative, that document progress of the Work.

3. Completed Project Photographs: Photographs, which are suitable for framing and for use in brochures or on the Internet.

1.4 SUBMITTALS:

1. Refer to Section 01 33 00 – Submittals.

2. Format and Media: Digital photography shall be used for Preconstruction and Progress Photographs. Submit digital Joint Photographic Experts Group (JPEG) images for electronic submittals.

   a. Media

      1) Digital Photography. Use at least 6.0-megapixel density for photographs.

3. Submittal Quantities and Frequencies

   a. Preconstruction photographs: Submit one set of digital images.

1) Multiple photographs shall be taken of the project site to document existing facilities, parking areas, driveways, surface features such as building, trees and other vegetation or landscaping.

b. Progress Photographs: Submit one set of Progress Photos digital images each month with each Application for Payment. Monthly Applications for Payment shall be deemed incomplete if not accompanied by the required Progress Photographs. Contractor's failure or election to not submit a monthly Application for Payment shall not affect the requirement for monthly Progress Photographs:

1) For Facility Contracts with a Total Bid Price over $100,000, at least once each month during construction: Provide five (5) progress photos as directed by Owner's Representative.

c. Completed Project Photographs:

1) Submit two sets of Completed Project Photographs, after Date of Substantial Completion and prior to final payment. Two sets of Completed Project photos shall be taken from two vantage points. Each of the two vantage points pre-approved by the Owner.

4. Labeling:

a. Digital Images: Place a label on the portable USB. Labels shall contain the following information:

1) Name of Project and Project Number

2) Name of Contractor.

3) Name and address of commercial photographer who took the photograph, if applicable

4) For each digital image create a file name which has as part of the name the date the photograph was taken and the location of the photograph by station, coordinates or other unique identifier

5. Photographic prints, portable USBs become the property of the Owner with all rights of reproduction to the Owner. Do not publish photographs without written consent by the Owner.

B. Quality Assurance:

1. Contractor shall be responsible for the quality of and timely execution and submittal of photographs.

PART 2 - PRODUCTS (NOT USED)

PART 3 - EXECUTION (NOT USED)

END OF SECTION

SECTION 01 33 00

SUBMITTALS

PART 1 - GENERAL

1.1 SUMMARY

A. Section Includes:

1. Mechanics and administration of the submittal process for:
   a. Shop Drawings.
   b. Samples.
   c. Miscellaneous submittals.
   d. Operation and Maintenance Manuals.
2. General content requirements for Shop Drawings.
3. Content requirements for Operation and Maintenance Manuals.

B. Related Specification Sections include but are not necessarily limited to:

1. Proposing Requirements, Contract Forms, and Conditions of the Contract.
2. Division 01 - General Requirements.
3. Sections in Divisions 02 through 35 identifying required submittals.

1.2 MEASUREMENT AND PAYMENT

A. Unit Price. No separate payment will be made for this item. Include the cost in associated items for this project.

1.3 DEFINITIONS

A. Shop Drawings:

1. See General Conditions.
2. Product data and samples are Shop Drawing information.

B. Miscellaneous Submittals:

1. Submittals other than Shop Drawings.
2. Representative types of miscellaneous submittal items include but are not limited to:
   a. Construction schedule.
   b. Facility Shutdown Plan(s)
   c. HVAC test and balance reports.
   d. Installed equipment and systems performance test reports.
   e. Manufacturer's installation certification letters.

f. Instrumentation and control commissioning reports.

g. Warranties.

h. Service agreements.

i. Construction photographs.

j. Record Documents.

k. Cost breakdown (Schedule of Values).

l. Safety Plan(s).

1.4 SUBMITTAL SCHEDULE

A. Schedule of Shop Drawings:

1. Submitted and approved within 20 days of receipt of Notice to Proceed.
2. Account for multiple transmittals under any specification section where partial submittals will be transmitted.

B. Shop Drawings: Submittal and approval prior to 50 percent completion.

1.5 PREPARATION OF SUBMITTALS

A. General:

1. All submittals and all pages of all copies of a submittal shall be completely legible.
2. Submittals which, in the Owner's Representative's or Principal Architect/Engineer's sole opinion, are illegible will be returned without review.

B. Shop Drawings:

1. Scope of any submittal and shop drawing transmittal:
   a. Submit shop drawings utilizing Owner's standard Submittal Transmittal Form.
   b. Limited to one (1) Specification Section.
   c. Do not submit under any Specification Section entitled (in part) "Basic Requirements" unless the product or material submitted is specified, in total, in a "Basic Requirements" Section.
2. Numbering letter of transmittal:
   a. Include a series number, "xx", beginning with "01" and increasing sequentially with each additional transmittal.
   b. Assign consecutive series numbers to subsequent transmittals.
3. Describing transmittal contents:
   a. Provide listing of each component or item in submittal capable of receiving an independent review action.

b. Identify for each item:

1) Manufacturer and Manufacturer's Drawing or data number.

2) Contract Document tag number(s).

3) Unique page numbers for each page of each separate item.

4) Use divider sheets with labeled tabs to separate independent items within a single submittal.

c. When submitting "or-equal" items that are not the products of named manufacturers, include the words "or-equal" in the item description.

4. Contractor stamping:

a. General:

1) Contractor's review and approval stamp shall be applied either to the letter of transmittal or a separate sheet preceding each independent item in the submittal.

a) Contractor's signature and date shall be wet ink signature. Is an electronic signature acceptable as most submittals are uploaded to Owner’s document management system as a .PDF electronic document?

b) Shop Drawing submittal stamp shall read "(Contractor's Name) has satisfied Contractor's obligations under the Contract Documents with respect to Contractor's review and approval as stipulated under General Conditions Paragraph 6.20.4."

2) Submittals containing multiple independent items shall be prepared with an index sheet for each item listing the discrete page numbers for each page of that item, which shall be stamped with the Contractor's review and approval stamp.

a) Individual pages or sheets of independent items shall be numbered in a manner that permits Contractor's review and approval stamp to be associated with the entire contents of a particular item.

b) Use divider sheets with labeled tabs to separate independent items within a single submittal.

b. Electronic stamps:

1) Contractor may electronically embed Contractor's review and approval stamp to either the Submittal Transmittal Form or a separate index sheet preceding each independent item in the submittal.

2) Contractor's signature and date on electronically applied stamps shall be wet ink signature.

5. Resubmittals:
   a. Number with original root number and a suffix letter starting with "A" on a new Submittal Transmittal Form.
   b. Do not increase the scope of any prior transmittal.
   c. Account for all components of prior transmittal.
      1) If items in prior transmittal received "A" or "B" Action code, list them and indicate "A" or "B" as appropriate (See also 1.6, this Section).
         a) Do not include submittal information for items listed with prior "A" or "B" in resubmittal.
      2) Indicate items to be resubmitted “at a later date” for any prior "C" or "D" Action item not included in resubmittal.
         a) Obtain Principal Architect/Engineer’s approval to exclude items.
6. Electronic submittals utilizing web based document management system:
   a. Shop drawing submittals shall be produced (scanned) in Adobe Acrobat's Portable Document Format (PDF) latest version.
   b. Do not password protect and/or lock the PDF document.
   c. Create one (1) PDF document (PDF file) for each submittal.
   d. Drawings or other graphics must be converted to PDF format and made part of the singe (one [1]) PDF document.
      1) Scanning to be used only where actual file conversion is not possible.
   e. Limit PDF document size to 10MB.
   f. Rotate pages that must be viewed in landscape to the appropriate position for easy reading.
   g. Images only shall be scanned at a resolution of 300 dpi or greater.
      1) Perform Optical Character Recognition (OCR) capture on all images.
      2) Achieve OCR with the "original image with hidden text" option.
      3) Word searches of the PDF document must operate successfully to demonstrate OCR compliance.
   h. Create bookmarks in the navigation frame, for each entry in the Table of Contents/Index.
      1) Normally three (3) levels deep (i.e., "Chapter," "Section," "Sub-section").
   i. Thumbnails must be generated for each PDF file.
   j. Set the opening view for PDF files as follows:
      1) Initial view: Bookmarks and Page.

2) Magnification: Fit in Window.

3) Page layout: Single page.

4) Set the file to open to the cover page of the submittal with bookmarks to the left, and the first bookmark linked to the cover page.

k. All PDF documents shall be set with the option "Fast Web View" to open the first pages of the document for the viewer while the rest of the document continues to load.

7. Contractor shall not use red color for marks on transmittals.

a. Duplicate all marks on all copies transmitted, and ensure marks are photocopy reproducible.

b. Outline Contractor marks on reproducible transparencies with a rectangular box.

8. Transmittal contents:

a. Coordinate and identify Shop Drawing contents so that all items can be easily verified by the Owner's Representative and the Principal Architect/Engineer.

b. Identify equipment or material use, tag number, Drawing detail reference, weight, and other Project specific information.

c. Provide sufficient information together with technical cuts and technical data to allow an evaluation to be made to determine that the item submitted is in compliance with the Contract Documents.

d. Submit items such as equipment brochures, cuts of fixtures, product data sheets or catalog sheets on 8-1/2 x 11 In pages.

1) Clearly mark (indicate) exact item or model and all options proposed.

e. When a Shop Drawing submittal is called for in any Specification Section, include as appropriate, scaled details, sizes, dimensions, performance characteristics, capacities, test data, anchoring details, installation instructions, storage and handling instructions, color charts, layout Drawings, rough-in diagrams, wiring diagrams, controls, weights and other pertinent data in addition to information specifically stipulated in the Specification Section.

1) Arrange data and performance information in format similar to that provided in Contract Documents.

2) Provide, at minimum, the detail specified in the Contract Documents.

f. Provide warranty information.

g. If proposed equipment or materials deviate from the Contract Drawings or Specifications in any way, clearly note the deviation and justify the said

deviation in detail in a separate letter immediately following transmittal sheet.

C. Miscellaneous Submittals:

1. Prepare in the format and detail specified in Specification requiring the miscellaneous submittal.

1.6 TRANSMITTAL OF SUBMITTALS

A. Shop Drawings:

1. Transmit all submittals via Owner's Document Management System.
2. Utilize SJRA Standard Submittal Transmittal Form (to be provided by Owner) to transmit all Shop Drawings, Samples and Operation and Maintenance Manuals.
3. All submittals must be from Contractor.
   a. Submittals will not be received from or returned to subcontractors.
   b. Operation and Maintenance Manual submittal stamp may be Contractor's standard approval stamp.
4. Provide submittal information defining specific equipment or materials utilized on the Project.
   a. Generalized product information, not clearly defining specific equipment or materials to be provided, will be rejected.

1.7 PRINCIPAL ARCHITECT/ENGINEER 'S REVIEW ACTION

A. Shop Drawings and Samples:

1. Items within transmittals will be reviewed for overall design intent and will receive one of the following actions:
   a. NO EXCEPTION.
   b. EXCEPTIONS AS NOTED.
   c. REVISE & RESUBMIT
   d. REJECTED - RESUBMIT.
   e. ACKNOWLEDGE RECEIPT.
   f. FOR INFORMATION PURPOSES ONLY.
   g. SUPPLEMENTARY INFORMATION.
2. Submittals received will be initially reviewed to ascertain inclusion of Contractor's approval stamp.
   a. Submittals not stamped by the Contractor or stamped with a stamp containing language other than that specified herein will not be reviewed for technical content and will be returned without any action.

3. In relying on the representation on the Contractor's review and approval stamp, Owner and Principal Architect/Engineer reserve the right to review and process poorly organized and poorly described submittals as follows:
   a. Submittals transmitted with a description identifying a single item and found to contain multiple independent items:
      1) Review and approval will be limited to the single item described on the transmittal letter.
      2) Other items identified in the submittal will:
         a) Not be logged as received by the Principal Architect/Engineer.
         b) Be removed from the submittal package and returned without review and comment to the Contractor for coordination, description and stamping.
         c) Be submitted by the Contractor as a new series number, not as a re-submittal number.
   b. Principal Architect/Engineer, at Principal Architect/Engineer's discretion, may revise the transmittal letter item list and descriptions, and conduct review.
      1) Unless Contractor notifies Principal Architect/Engineer in writing that the Principal Architect/Engineer's revision of the Submittal Transmittal Form item list and descriptions was in error, Contractor's review and approval stamp will be deemed to have applied to the entire contents of the submittal package.
4. Submittals returned with Action "A" or "B" are considered ready for fabrication and installation.
   a. If for any reason a submittal that has an "A" or "B" Action is resubmitted, it must be accompanied by a letter defining the changes that have been made and the reason for the resubmittal.
   b. Destroy or conspicuously mark "SUPERSEDED" all documents having previously received "A" or "B" Action that are superseded by a resubmittal.
5. Submittals with Action "A" or "B" combined with Action "C" (Revise and Resubmit) or "D" (Rejected) will be individually analyzed giving consideration as follows:
   a. The portion of the submittal given "C" or "D" will not be distributed (unless previously agreed to otherwise at the Preconstruction Conference).
      1) One (1) copy or the one (1) transparency of the "C" or "D" Drawings will be marked up and returned to the Contractor.
         a) Correct and resubmit items so marked.
   b. Items marked "A" or "B" will be fully distributed.

c. If a portion of the items or system proposed are acceptable, however, the major part of the individual Drawings or documents are incomplete or require revision, the entire submittal may be given "C" or "D" Action.

1) This is at the sole discretion of the Principal Architect/Engineer.

2) In this case, some Drawings may contain relatively few or no comments or the statement, "Resubmit to maintain a complete package."

3) Distribution to the Owner and field will not be made (unless previously agreed to otherwise).

6. Failure to include any specific information specified under the submittal paragraphs of the Specifications will result in the submittal being returned to the Contractor with "C" or "D" Action.

7. Calculations: Requirements for the submittal of calculations in the individual Specification Sections shall be satisfied through the submittal of a certification sealed by the Principal Architect/Engineer that the calculations have been performed. Certification will be received for information purposes only and will be returned stamped "D. ACKNOWLEDGE RECEIPT ".

8. Transmittals of submittals which the Principal Architect/Engineer considers as "Not Required" submittal information, which is supplemental to but not essential to prior submitted information, or items of information in a transmittal which have been reviewed and received "A" or "B" Action in a prior submittal, will be returned with Action "E. Acknowledge Receipt" (Principal Architect/Engineer 's Review Not Required).

9. Samples may be retained for comparison purposes.

a. Remove samples when directed.

b. Include in bid all costs of furnishing and removing samples.

10. Approved samples submitted or constructed, constitute criteria for judging completed work.

a. Finished work or items not equal to samples will be rejected.

PART 2 - PRODUCTS (NOT USED)

PART 3 - EXECUTION (NOT USED)

END OF SECTION

SECTION 01 35 05

ENVIRONMENTAL PROTECTION AND SPECIAL CONTROLS

PART 1 - GENERAL

1.1 SUMMARY

A. Section Addresses:

1. Minimizing the pollution of air, water, or land; control of noise, the disposal of solid waste materials, and protection of deposits of historical or archaeological interest.

B. Related Specification Sections include but are not necessarily limited to:

1. Proposing Requirements, Contract Forms, and Conditions of the Contract.
2. Division 01 – General Requirements.
3. Section 35 15 53 – Relief Well Maintenance.

1.2 MEASUREMENT AND PAYMENT

A. Unit Prices. No separate payment will be made for this item. Include the cost of same in associated items for this project.

1.3 SUBMITTALS

A. Shop Drawings:

1. See Specification Section 01 33 00 – Submittals for requirements for the mechanics and administration of the submittal process.
2. Prior to the start of any construction activities submit:
   a. A detailed proposal of all methods of control and preventive measures to be utilized for environmental protection.
   b. A drawing of the work area, haul routes, storage areas, access routes and current land conditions including trees and vegetation.
   c. Submit manufacturer's catalog sheets and other product data on dispensing equipment, pump, and aboveground fuel storage tanks, indicating capacity and dimensions of tank.
   d. Submit list of spill containment equipment, and quantities thereof, located at fueling area.

1.4 ENVIRONMENTAL CONTROLS

A. Provide and maintain methods, equipment, and temporary construction as necessary for controls over environmental conditions at construction site and adjacent areas.

B. Work to minimize impact to surrounding environment. Adopt construction procedures that do not cause unnecessary excavation and filling of terrain,

indiscriminate destruction of vegetation, air or stream pollution, nor harassment or destruction of wildlife.

C. Recognize and adhere to environmental requirements of Project. Limit disturbed areas to boundaries established by Contract. Avoid pollution of "on-site" streams, sewers, wells, or other water sources.

D. Burning of rubbish, debris, or waste materials is not permitted.

E. Comply with Specification Section 35 15 53 – Relief Well Maintenance for discharge of all water, solutions, and other materials.

1.5 POLLUTION CONTROL

A. Provide methods, means, and facilities required to prevent contamination of soil, water, or atmosphere by discharge of noxious substances from construction operations.

B. Provide equipment and personnel to perform required emergency measures to contain spillage, and to remove contaminated soils or liquids. Excavate and dispose of contaminated earth off-site, and replace with suitable compacted fill and topsoil.

C. Provide systems for control of atmospheric pollutants.

1. Prevent toxic concentrations of chemicals.
2. Prevent harmful dispersal of pollutants into atmosphere.

D. Use equipment that conforms to current Federal, State, and local laws and regulations.

E. Install or otherwise implement positive controls to prevent hazardous materials migrating from Work area.

1.6 PEST AND RODENT CONTROL (NOT USED)

1.7 NOISE CONTROL

A. Comply with all state and/or local municipal noise limits.

B. Provide vehicles, equipment, and construction activities that minimize noise to greatest degree practicable. Conform noise levels to latest OSHA standards. Do not permit noise levels to interfere with Work or create nuisance in surrounding areas.

C. Conduct construction operations during daylight hours except as approved by Owner's Representative.

D. Select construction equipment to operate with minimum noise and vibration. When in opinion of Owner's Representative, objectionable noise or vibration is produced by equipment, rectify conditions without additional cost to Owner. Sound Power Level (PWL) of equipment shall not exceed 85 dbA (re: 10-12 watts) measured 5 feet from piece of equipment. Explicit equipment noise requirements are specified with equipment specifications.

1.8 DUST CONTROL (NOT USED)

1.9 WATER RUNOFF AND EROSION CONTROL

A. Comply with Texas Pollutant Discharge Elimination System (TPDES) permit when required.

B. In addition to TPDES requirements:

1. Provide methods to control surface water, runoff, subsurface water, and water from excavations and structures to prevent damage to Work, site, or adjoining properties.
2. Control fill, grading and ditching to direct water away from excavations, pits, tunnels, and other construction areas; and to direct drainage to proper runoff courses so as to prevent erosion, sedimentation or damage.
3. Provide, operate, and maintain equipment and facilities of adequate size to control surface water.
4. Dispose of drainage water in manner to prevent flooding, erosion, or other damage to portion of site or to adjoining areas and in conformance with environmental requirements.
5. Retain existing drainage patterns external to construction site by constructing temporary earth berms, sedimentation basins, retaining areas, and temporary ground cover as needed to control conditions.
6. Plan and execute construction and earth work by methods to control surface drainage from cuts and fills, and from borrow and waste disposal areas, to prevent erosion and sedimentation.
   a. Minimize area of bare soil exposed at one time.
   b. Provide temporary control measures, as berms, dikes, and drains.
7. Construct fills and waste areas by selective placement to eliminate erosion of surface silts or clays.
8. Inspect earthwork periodically to detect evidence of start of erosion. Apply corrective measures as required to control erosion.

1.10 QUALITY ASSURANCE

A. Contractor is responsible for assuring that all testing, handling, storage, transportation, and disposal requirements are properly implemented, including satisfactory training of job site personnel and the cleaning of all reusable items and equipment prior to removal from the site.

B. Person conducting visual examination for pollutant shall be fully knowledgeable about the TPDES Construction General Permit, detecting sources of storm water contaminants, inspection of aboveground storage tank and appurtenances for leakage, and the day-to-day operations that may cause unexpected pollutant releases.

PART 2 - PRODUCTS

2.1 ABOVEGROUND FUEL STORAGE TANK (NOT USED)

2.2 CONCRETE (NOT USED)

2.3 AGGREGATES (NOT USED)

PART 3 - EXECUTION

3.1 INSTALLATION

A. Employ and utilize environmental protection methods, obtain all necessary permits, and fully observe all local, state, and federal regulations.

B. No clearing and grubbing or rough cutting permitted until erosion and sediment control systems are in place, other than site Work specifically directed by Owner's Representative to allow soil testing and surveying.

C. Prohibit equipment and vehicles from maneuvering on areas outside of dedicated rights-of-way and easements for construction. Immediately repair damage caused by construction traffic to erosion and sediment control systems.

D. Maintain existing erosion and sediment control systems located within project site until acceptance of Project or until directed by Owner's Representative to remove and discard existing system.

E. Regularly inspect and repair or replace damaged components of erosion and sediment control systems as specified in this Section. Unless otherwise directed, maintain erosion and sediment control systems until project area stabilization is accepted by the Owner. Remove erosion and sediment control systems promptly when directed by Owner's Representative. Discard removed materials off site.

F. Remove and dispose sediment deposits at designated spoil site for Project. If a project spoil site is not designated on Drawings, dispose of sediment off site at location not in or adjacent to stream or flood plain. Assume responsibility for off-site disposal. Spread sediment evenly throughout site, compacted and stabilized. Prevent sediment from flushing into a stream or drainage way. If sediment has been contaminated, dispose of in accordance with existing federal, state, and local rules and regulations.

G. Assume responsibility for collecting, storing, hauling, and disposing of spoil, silt, and waste materials as specified in this or other Specifications and in compliance with applicable federal, state, and local rules and regulations.

H. Employ protective measures to avoid damage to existing trees to be retained on project site. Conduct construction operations under this Contract in conformance with erosion control practices described in Drawings and this or other Specifications.

I. Prepare spill response and containment procedures to be implemented in event of significant materials spill. Significant materials include but are not limited to:

raw materials; fuels; materials such as solvent, detergents, and plastic pellets; finished materials such as metallic products; raw materials used in food processing or production; hazardous substances designated under Section 101(14) of CERCLA; chemical required to be reported pursuant to Section 313 of Title III of SARA; fertilizers; pesticides, and waste products such as slag, ashes and sludge that have potential to be released with storm water discharges. Spill containment procedures shall be kept on-site or in construction field office.

J. Spill containment equipment appropriate to size of operation is to be located in close proximity of fueling area. Such equipment includes, but not limited to, suitable waste containers for significant materials, drip pans, booms, inlet covers, or absorbent.

K. Properly label significant materials or waste containers used for construction activities and stored on-site overnight.

1. On-site waste material storage shall be self-contained and shall satisfy appropriate local, state and federal rules and regulations.

L. Install, maintain, and inspect erosion, sediment control measures and practices as specified in Drawings and in this or other Specifications.

M. Land Protection:

1. Except for any work or storage area and access routes specifically assigned for the use of the Contractor, the land areas outside the limits of construction shall be preserved in their present condition.

   a. Contractor shall confine his construction activities to areas defined for work within the Contract Documents.

2. Manage and control all borrow areas, work or storage areas, access routes and embankments to prevent sediment from entering nearby water or land adjacent to the work site.

3. Restore all disturbed areas including borrow and haul areas and establish permanent type of locally adaptable vegetative cover.

4. Unless earthwork is immediately paved or surfaced, protect all side slopes and backslopes immediately upon completion of final grading.

5. Plan and execute earthwork in a manner to minimize duration of exposure of unprotected soils.

6. Except for areas designated by the Contract Documents to be cleared and grubbed, the Contractor shall not deface, injure or destroy trees and vegetation, nor remove, cut, or disturb them without approval of the Owner’s Representative.

   a. Any damage caused by the Contractor's equipment or operations shall be restored as nearly as possible to its original condition at the Contractor's expense.

7. Utilize, as necessary, erosion control methods to protect side and backslopes, minimize and the discharge of sediment to the surface water leaving the construction site as soon as rough grading is complete.
   a. These controls shall be maintained until the site is ready for final grading and landscaping or until they are no longer warranted and concurrence is received from the Owner's Representative.
   b. Physically retard the rate and volume of run-on and runoff by:
      1) Implementing structural practices such as diversion swales, terraces, straw bales, silt fences, berms, storm drain inlet protection, rocked outlet protection, sediment traps and temporary basins.
      2) Implementing vegetative practices such as temporary seeding, permanent seeding, mulching, sod stabilization, vegetative buffers, hydroseeding, anchored erosion control blankets, sodding, vegetated swales or a combination of these methods.
      3) Providing Construction sites with graveled or rocked access entrance and exit drives and parking areas to reduce the tracking of sediment onto public or private roads.
8. Discharges from the construction site shall not contain pollutants at concentrations that produce objectionable films, colors, turbidity, deposits or noxious odors in the receiving stream or waterway.

N. Solid Waste Disposal:

1. Collect solid waste on a daily basis.
2. Provide disposal of degradable solid waste to an approved solid waste disposal site.
3. Provide disposal of nondegradable solid waste to an approved solid waste disposal site or in an alternate manner approved by Owner's Representative and regulatory agencies.
4. No building materials wastes or unused building materials shall be buried, dumped, or disposed of on the site.

O. Fuel and Chemical Handling:

1. Store and dispose of chemical wastes in a manner approved by regulatory agencies.
2. Take special measures to prevent chemicals, fuels, oils, greases, herbicides, and insecticides from entering drainage ways.
3. Do not allow water used in onsite material processing, concrete curing, cleanup, and other waste waters to enter a drainage way(s) or stream.
4. The Contractor shall provide containment around fueling and chemical storage areas to ensure that spills in these areas do not reach waters of the state.

P. Burning:

1. Do not burn material on the site.
2. If the Contractor elects to dispose of waste materials by burning, make arrangements for an off-site burning area and conform to all agency regulations.

Q. Control of Noise:

1. Control noise by fitting equipment with appropriate mufflers.

R. Completion of Work:

1. Upon completion of work, leave area in a clean, natural looking condition.
2. Ensure all signs of temporary construction and activities incidental to construction of required permanent work are removed.

S. Historical Protection:

1. If during the course of construction, evidence of deposits of historical or archaeological interests is found, cease work affecting find and notify Owner's Representative.
   a. Do not disturb deposits until written notice from Owner's Representative is given to proceed.
2. The Contractor will be compensated for lost time or changes in construction to avoid the find based upon normal change order procedures.

3.2 TOPSOIL PLACEMENT FOR EROSION AND SEDIMENT CONTROL SYSTEMS (NOT USED)

3.3 DUST CONTROL (NOT USED)

3.4 KEEPING STREETS CLEAN

A. Keep streets including Owner's roads, driveways, and parking areas clean of construction debris and mud carried by construction vehicles and equipment.

B. Shovel or sweep pavement to extent necessary to keep street clean. Water hosing or sweeping of debris and mud off of street into adjacent areas is not allowed.

3.5 EQUIPMENT MAINTENANCE AND REPAIR

A. Confine maintenance and repair of construction machinery and equipment to areas specifically designated for that purpose. Locate areas so that oils, gasoline, grease, solvents, and other potential pollutants cannot be washed directly into receiving streams or storm water conveyance systems. Provide these areas with adequate waste disposal receptacles for liquid as well as solid waste. Clean and inspect maintenance areas daily.

B. On construction site where designated equipment maintenance areas are not feasible, take precautions during each individual repair or maintenance

operation to prevent potential pollutants from washing into streams or conveyance systems. Provide temporary waste disposal receptacles.

3.6 WASTE COLLECTION AND DISPOSAL

A. Formulate and implement a plan for collection and disposal of waste materials on construction site. In plan, designate locations for trash and waste receptacles and establish a collection schedule. Specify and carry out methods for ultimate disposal of waste in accordance with applicable local, state, and federal health and safety regulations. Make special provisions for collection and disposal of liquid wastes and toxic or hazardous materials.

B. Keep receptacles and waste collection areas neat and orderly to extent possible. Waste shall not be allowed to overflow its container or accumulate from day-to-day. Locate trash collection points where they shall least likely be affected by concentrated storm water runoff.

3.7 WASHING AREAS

A. Avoid washing concrete delivery trucks or dump trucks and other construction equipment at locations where runoff shall flow directly into a watercourse or storm water conveyance system. Designate special areas for washing vehicles. Locate these areas where wash water shall spread out and evaporate or infiltrate directly into ground, or where runoff can be collected in temporary holding or seepage basin. Beneath wash areas construct a gravel or rock base to minimize mud production.

3.8 STORAGE OF CONSTRUCTION MATERIALS AND CHEMICALS

A. Isolate sites where chemicals, cements, solvents, paints, or other potential water pollutants are stored in areas where they shall not cause runoff pollution.

B. Store toxic chemicals, materials, pesticides, paints, and acids in accordance with manufacturers' guidelines. Protect groundwater resources from leaching by placing a plastic mat, packed clay, tar paper, or other impervious materials on areas where toxic liquids are to be opened and stored.

3.9 DEMOLITION AREAS (NOT USED)

3.10 SANITARY FACILITIES

A. Provide construction sites with adequate portable toilets for workers in accordance with applicable health regulations.

3.11 PESTICIDES (NOT USED)

3.12 CONSTRUCTION METHODS (NOT USED)

3.13 MAINTENANCE

A. Inspections shall be conducted by designated health and safety officer qualified to conduct health and safety inspections.

B. Inspect stabilized areas after every storm event and at least once a week. Provide periodic top dressing with additional coarse aggregate to maintain

required depth. Repair and clean out damaged control measures used to trap sediment.

C. Inspect fuel tank foundation's bermed area after every storm event and at least once a week. Visually examine storm water contained in tank's bermed foundation area for oil sheen or other obvious indicators of storm water pollution. Properly dispose of storm water when pollutant is present. Record visual examination of storm water discharge in Report noting date and time of examination, name of examiner, observations of water quality, and volume of storm water discharged from bermed area. Keep Report with other storm water pollution control inspection reports on site, in readily accessible location.

3.14 TEMPORARY FUELING AREA CLOSURE

A. Dispose of temporary vehicle and equipment fueling area by removal of sediment and erosion controls properly off site. Owner's Representative will inspect top soils in fueling area and immediate vicinity for evidence of fuel leaks. If Owner's Representative determines that sufficient pollutants have been released, remove soil and properly dispose off site. Other remediation methods may be required.

END OF SECTION

THIS PAGE INTENTIONALLY LEFT BLANK

SECTION 01 45 16.32

CONTRACTOR'S QUALITY CONTROL

PART 1 - GENERAL

1.1 SUMMARY

A. Section Includes

1. Measurement and Payment
2. Quality Assurance/Control of Installation
3. References
4. Manufacturer's Field Services and Reports

B. Related Specification Sections include but are not necessarily limited to:

1. Proposing Requirements, Contract Forms, and Conditions of the Contract.
2. Division 01 – General Requirements.

1.2 MEASUREMENT AND PAYMENT

A. Unit Price. No separate payment will be made for this item. Include the cost in associated items for this project.

1.3 QUALITY ASSURANCE/CONTROL OF INSTALLATION

A. Monitor quality control over suppliers, manufacturers, products, services, site conditions, and workmanship, to produce Work of specified quality at no additional cost to the Owner.

B. Comply fully with manufacturers' installation instructions, including each step in sequence.

C. Request clarification Owner's Representative before proceeding when manufacturers' instructions conflict with Contract.

D. Comply with specified standards as minimum requirements for Work except when more stringent tolerances, codes, or specified requirements indicate higher standards or more precise workmanship.

E. Perform Work by persons qualified to produce specified level of workmanship.

1.4 REFERENCES

A. Obtain copies of standards and maintain at job site when required by individual Specification sections.

1.5 MANUFACTURERS' FIELD SERVICES AND REPORTS

A. When specified in individual Specification sections or as required by Owner's Representative, provide material or product suppliers' or manufacturers' technical representative to observe site conditions, conditions of surfaces and installation, quality of workmanship, start-up of equipment, operator training,

test, adjust and balance of equipment as applicable and to initiate operation, as required. Conform to minimum time requirements for start-up operations and operator training when defined in Specification sections.

B. At Owner's Representative's request, submit qualifications of manufacturers' representative to Owner's Representative 15 days in advance of required representatives' services. Representative is subject to approval by Owner's Representative.

C. A manufacturers' representative is to report observations and site decisions or instructions given to applicators or installers that are supplemental or contrary to a manufacturer's written instructions. Submit report within 14 days of observation to Owner's Representative for review.

PART 2 - PRODUCTS (NOT USED)

PART 3 - EXECUTION (NOT USED)

END OF SECTION

SECTION 01 65 50

PRODUCT DELIVERY, STORAGE, AND HANDLING

PART 1 - GENERAL

1.1 SUMMARY

A. Section includes requirements for product delivery, storage and handling.

B. Related Specification Sections include but are not necessarily limited to:

1. Proposing Requirements, Contract Forms, and Conditions of the Contract.
2. Division 01 - General Requirements.

1.2 MEASUREMENT AND PAYMENT

A. No payment will be made to Contractor for equipment or materials not properly stored and insured or without approved Shop Drawings.

1. Previous payments for items will be deducted from subsequent progress estimate(s) if proper storage procedures are not observed.

B. Unit Price. No separate payment will be made for this item. Include the cost in associated items for this payment.

1.3 SUBMITTALS

A. Provide Owner project Log Book.

1.4 TRANSPORTATION

A. Make arrangements for transportation, delivery, and handling of equipment and materials required for timely completion of Work.

B. Transport and handle products in accordance with instructions.

C. Consign and address shipping documents to proper party giving name of Project, street number, and city. Shipments shall be delivered to Contractor.

1.5 DELIVERY

A. Scheduling: Schedule delivery of products or equipment as required to allow timely inspection and installation, and to avoid prolonged storage, overburdening of limited storage space, conflicts with other contractors on site. Confirm availability of equipment and personnel for handling products prior to delivery.

B. Packaging: Deliver products or equipment in manufacturer's original unopened and unbroken cartons or other containers designed and constructed to protect the contents from physical or environmental damage.

C. Identification: Clearly and fully mark and identify as to manufacturer, item, and installation location.

D. Protection and Handling: Provide manufacturer's instructions for storage and handling.

PART 2 - PRODUCTS

A. Products: Means material, equipment, or systems forming Work. Does not include machinery and equipment used for preparation, fabrication, conveying, and erection of Work. Products may also include existing materials or components designated for reuse.

B. For material and equipment specifically indicated or specified to be reused in the work:

1. Use special care in removal, handling, storage and reinstallation, to assure proper function in completed work.
2. Arrange for transportation, storage and handling of products which require offsite storage, restoration or renovation. Pay all costs for such work.

C. When contract documents require that installation of work comply with manufacturer's printed instructions, obtain and distribute copies of such instructions to parties involved in installation, including two copies to Owner's Representative. Maintain one set of complete instructions at job site during installation until completion.

D. Provide equipment and components from fewest number of manufacturers as practical, in order to simplify spare parts inventory and allow for maximum interchangeability of components. For multiple components of same size, type, or application, use same make and model of component throughout Project.

PART 3 - EXECUTION

3.1 PROTECTION, STORAGE AND HANDLING

A. Protection:

1. Protect materials in accordance with manufacturer's recommendations and requirements of these Specifications.
   a. Store products or equipment in location to avoid loss or physical damage to items while in storage.
2. Protect equipment from exposure to elements and keep thoroughly dry.
3. When space heaters are provided in equipment, connect and operate heaters during storage until equipment is placed in service.

B. Storage:

1. Store materials in accordance with manufacturer's recommendations and requirements of these Specifications.
2. Make necessary provisions for safe storage of materials and equipment. Place loose soil materials, and materials to be incorporated into Work to

prevent damage to any part of Work or existing facilities and to maintain free access at all times to all parts of Work and to utility service company installations in vicinity of Work. Keep materials and equipment neatly and compactly stored in locations that will cause minimum inconvenience to other contractors, public travel, adjoining owners, tenants, and occupants. Arrange storage to provide easy access for inspection.

3. Restrict storage to areas available on construction site for storage of material and equipment as shown on Drawings or approved by Owner's Representative.
4. Provide off-site storage and protection when on-site storage is not adequate. Provide addresses of and access to off-site storage locations for inspection by Owner's Representative.
5. Do not use lawns, grass plots, or other private property for storage purposes without written permission of owner or other person in possession or control of premises.
6. Store in manufacturers' unopened containers.
7. Neatly, safely, and compactly stack materials delivered and stored along line of Work to avoid inconvenience and damage to property owners and general public, and maintain at least 3 feet from fire hydrant. Keep public, private driveways, and street crossings open.
8. Repair or replace damaged lawns, sidewalks, streets, or other improvements to satisfaction of Owner's Representative. Total length which materials may be distributed along route of construction at one time is 1,000 linear feet, unless otherwise approved in writing by Owner's Representative.

C. Handling:

1. Handle materials in accordance with manufacturer's recommendations and requirements of these Specifications.
2. Coordinate off-loading of materials and equipment delivered to job site. If necessary to move stored materials and equipment during construction, relocate materials and equipment at no additional cost to Owner. Do not allow the off-loading of materials in those parking areas used for crew's personal vehicles.
3. Provide equipment and personnel necessary to handle products by methods to prevent damage to products or packaging.
4. Provide additional protection during handling as necessary to prevent breaking, scraping, marring, or otherwise damaging products or surrounding areas.
5. Handle products by methods to prevent over bending or over stressing.
6. Lift heavy components only at designated lifting points.

7. Do not drop, roll, or skid products off delivery vehicles. Hand carry or use suitable materials handling equipment.

3.2 STORAGE FACILITIES

A. Temporary Storage Building (if required):

1. Provide a weatherproof temporary storage building specifically for the purpose of providing for protection of products and equipment.
   a. Size building to accommodate anticipated storage items.
2. Equip building with lockable doors and lighting, and provide electrical service for equipment space heaters and heating or ventilation as necessary to provide storage environments acceptable to specified manufacturers.
3. Provide methods of storage of products and equipment off the ground.
4. Provide this structure within 30 days after Notice to Proceed.
   a. Locate building on-site where shown on the Drawings or in location approved by the Owner's Representative.
   b. Remove building from site prior to startup and demonstration period.

3.3 FIELD QUALITY CONTROL

A. Inspect Deliveries:

1. Inspect all products or equipment delivered to the site prior to unloading.
   a. Reject all products or equipment that are damaged, used, or in any other way unsatisfactory for use on Project.

B. Monitor Storage Area: Monitor storage area to ensure suitable temperature and moisture conditions are maintained as required by manufacturer or as appropriate for particular items.

END OF SECTION

SECTION 01 71 13

MOBILIZATION

PART 1 - GENERAL

1.1 SUMMARY

A. Section includes requirements for mobilization.

B. Related Specification Sections include but are not necessarily limited to:

1. Proposing Requirements, Contract Forms, and Conditions of the Contract.
2. Division 01 – General Requirements.

1.2 MEASUREMENT AND PAYMENT

A. Measurement for mobilization is on lump sum basis.

B. Mobilization payments will be included in periodic progress payment upon written application subject to following provisions:

1. Authorization for payment of 50 percent of Contract Price for mobilization will be made upon receipt and approval by Owner's Representative of the following items, as applicable:
   a. Schedule of Values submittal in accordance with Specification Section 01 29 73 – Schedule of Values.
   b. Construction Schedule submittal in accordance with Specification Section 01 32 16 – Construction Progress Schedule.
2. Authorization for payment of remaining 50 percent of Contract Price for mobilization will be made upon completion of Work amounting to 5 percent of Contract Price less mobilization unit price.

C. Mobilization payments will be subject to retainage amounts stipulated in General Conditions of the Contract.

1.3 SUBMITTALS (NOT USED)

PART 2 - PRODUCTS (NOT USED)

PART 3 - EXECUTION (NOT USED)

END OF SECTION

THIS PAGE INTENTIONALLY LEFT BLANK

SECTION 01 74 19

CONSTRUCTION WASTE MANAGEMENT AND DISPOSAL

PART 1 - GENERAL

1.1 SUMMARY

A. Section includes requirements for construction waste management and disposal.

B. Related Specification Sections include but are not necessarily limited to:

1. Proposing Requirements, Contract Forms, and Conditions of the Contract.
2. Division 01 – General Requirements.
3. Section 35 13 53 – Relief Well Maintenance.

1.2 MEASUREMENT AND PAYMENT

A. No separate payment will be made for waste material disposal under this Section. Include payment in unit price for related sections.

1.3 SUBMITTALS

A. Conform to requirements of Specification Section 01 33 00 – Submittals.

B. Obtain and submit disposal permits for proposed disposal sites if required by local ordinances. Submit a copy of all disposal permits to the Owner's Representative.

C. Submit copy of written permission from property owner(s) outside limits of Project, with description of property, prior to disposal of excess material. Submit written and signed release from property owner upon completion of disposal work. Copies of the permission and release documents are to be submitted to the Owner's Representative.

PART 2 - PRODUCTS (NOT USED)

PART 3 - EXECUTION

3.1 SALVAGEABLE MATERIAL

A. Excavated Material: When indicated on Drawings, load, haul, and deposit excavated material at location or locations shown on Drawings outside limits of Project.

B. Coordinate with the Owner's Representative the loading of salvageable material.

3.2 EXCESS MATERIAL

A. Remove and legally dispose of water, sludge, well treatment solutions, and other materials not designated for salvage from job site. Coordinate with Owner's Representative on the disposal of all materials. Refer to Specification Section 35 15 53 – Relief Well Maintenance for additional criteria and requirement on disposal of materials.

B. Verify flood plain status of any proposed disposal site. Do not dispose of excavated materials in area designated as within 100-year Flood Hazard Area unless the proper permit has been obtained. Remove excess material placed in "100-year Flood Hazard Area" at no additional cost to the Owner.

C. Remove waste materials from site daily, in order to maintain site in neat and orderly condition, unless otherwise authorized by the Owner.

END OF SECTION

SECTION 01 74 23

RESTORATION OF SITE

PART 1 - GENERAL

1.1 SUMMARY

A. Section includes requirements for the restoration of sites affected by Facilities Work.

B. Related Specification Sections include but are not necessarily limited to:

1. Proposing Requirements, Contract Forms, and Conditions of the Contract.
2. Division 01 – General Requirements.
3. Section 32 92 13 – Hydro-Mulching (if required by Work Order).

1.2 MEASUREMENT AND PAYMENT

A. Payment will be made at unit price for Site Restoration, regardless of method of construction, paved or unpaved areas, or thickness and width of pavement. Payment for site restoration will be made when restoration is complete. No partial payment will be made.

1.3 REFERENCES

A. ANSI Z60.1 – American Standard for Nursery Stock.

1.4 DEFINITIONS

A. Site restoration is replacement or reconstruction of site improvements to rights-of-way, easements, public property, and private property that are affected or altered by construction operations, with improvements to restore to a condition which is equal to, or better than, that which existed prior to construction operations.

B. Site Improvement includes but is not limited to pavement, curb and gutter, esplanades, sidewalks, driveways, culverts, headwalls, mail boxes, lighting, signage, fences, lawns, irrigation systems, and landscaping.

1.5 SUBMITTALS

A. Conform to requirements of Specification Section 01 33 00 – Submittals.

B. Submit qualifications of nursery or landscaping firm to be used.

1.6 QUALITY ASSURANCE

A. Have trees, landscape shrubs, and plantings performed by qualified personnel.

1.7 SCHEDULING

A. For utility work requiring testing or post-installation TV inspection, completion of segment is not considered to include testing or TV inspection. Schedule for

completion of site restoration is not determined by completion of testing or TV inspection.

1.8 WARRANTY

A. Provide 2-week warranty on plants and sod grasses that die due to shock or damage only.

B. Replace plants that fail during warranty period according to specifications governing original plants.

C. Damage caused by natural hazards including hail, high winds or storm is not covered by warranty.

D. Existing plant material required to be moved on site are covered under warranty.

PART 2 - PRODUCTS

2.1 MATERIALS

A. Seeding and Sodding.

1. If required by specific Work Order, provide hydro-mulching/seeding in accordance with Specification Section 32 92 13 – Hydro-Mulching.

B. Trees, Shrubs, and Plantings.

1. Provide trees, shrubs, and plants of quantity, size, genus, species, and variety of those being replaced and conforming to recommendations and requirements of ANSI Z60.1.
2. Use balled-and-burlapped nursery stock for tree replacement.
3. Within availability of standard nursery stock, replace each removed tree with one of an equivalent species and size, but with not less than 2½-inch diameter trunk, as measured 1½ feet above natural ground.

PART 3 - EXECUTION

3.1 COORDINATION

A. Limit utility installation to maximum of two project site locations for projects involving multiple subdivisions or locations, unless otherwise approved by the Owner's Representative.

3.2 EXAMINATION

A. Construction Site Photographs. Document conditions on and adjacent to construction site with construction photographs as specified in Specification Section 01 32 36.01 – Project Photographs.

B. Make photographs of all areas where construction operations will be conducted including driveways and sidewalks within or adjacent to Work area.

3.3 PREPARATION (NOT USED)

3.4 INSTALLATION

A. Pavement, Sidewalk, and Driveway Restoration.

1. Replace pavement, curb and gutter, culverts, headwalls, sidewalks, and driveways removed or damaged as result of construction operations.
2. Where replacement sidewalks terminate at street curb radius, construct wheel chair ramp that meets current Texas Accessibility Standards.

B. Seeding and Sodding.

1. Clean up construction debris and level area with bank sand so that resulting surface of new grass matches level of existing grass and maintains pre-construction drainage patterns. Level minor ruts or depressions caused by construction operations where grass is still viable by filling with bank sand.
2. Restore unpaved areas not requiring sodding with hydromulch methods (if required by specific Work Order), conforming to Specification Section 32 92 13 – Hydro-Mulching.

C. Trees, Shrubbery, and Plants.

1. Take extra care in removing and replanting trees, shrubbery, and plants. Remove trees, shrubbery, and plants, leaving soil around roots. Place trees, shrubbery, and plants outside of excavation area.
2. Replace in kind any trees, shrubbery, and plants removed or damaged by construction operations.
3. Have nursery or landscape firm make tree replacements using balled-and-burlapped nursery stock.

D. Fence Removal and Replacement.

1. Replace fencing removed or damaged to equal or better than what existed prior to construction, including concrete footings and mow strips. Provide new wood posts, top and bottom railing and panels. Metal fencing material not damaged by Work may be reused.
2. Remove and dispose of damaged or substandard material.

3.5 CLEANING

A. Remove debris and trash to maintain clean and orderly site as described in General Conditions and Specification Section 01 74 19 – Construction Waste Management and Disposal.

3.6 MAINTENANCE

A. Maintain shrubs, plantings, sodded areas and seeded areas through warranty period.

B. Replace shrubs, plantings, and seeded or sodded areas that fail to become established through warranty period.

C. Maintain newly planted trees, shrubs, and plantings as follows:

   1. Water as often as necessary to keep ground and backfill moist until plantings have become established.
   2. Repair or replace bracing as necessary.
   3. Prune as necessary.
   4. Treat plants in accordance with approved methods of horticultural practices where insects or disease affect plants after planting.

D. Refer to Specification Section 32 92 13 – Hydro-Mulching for additional maintenance requirements.

END OF SECTION

SECTION 01 77 19

CLOSEOUT REQUIREMENTS

PART 1 - GENERAL

1.1 SUMMARY

A. Section includes requirements for closeout of a construction project.

B. Related Specification Sections include but are not necessarily limited to:

1. Proposing Requirements, Contract Forms, and Conditions of the Contract.
2. Division 01 – General Requirements.
3. Section 35 15 53 – Relief Well Maintenance.

1.2 MEASUREMENT AND PAYMENT

A. Unit Price. No separate payment will be made for this item. Include the cost in associated items for this project.

1.3 SUBMITTALS (NOT USED)

1.4 SUBSTANTIAL COMPLETION

A. Comply with General Conditions of the Contract regarding Substantial Completion when Contractor considers the Work, or portion thereof designated by Owner's Representative, to be substantially complete.

B. Ensure the following items have been completed when included in the Work, prior to presenting a list of items to be inspected by Owner's Representative for issuance of a Certificate of Substantial Completion:

1. Site restoration, unless waived by the Owner in writing;
2. General clean up of site;
3. Completion and installation of all bid items included in Contractor's Proposal Form and approved Contract Document changes.

C. Assist Owner's Representative with inspection of Contractor's list of items and complete or correct the items, including items added by Owner's Representative, within a time period of 30 days or as mutually agreed.

D. Should Owner's Representative's inspection show failure of Contractor to comply with substantial completion requirements, Contractor shall complete or

correct the items, before requesting another inspection by Owner's Representative.

1.5 CLOSEOUT PROCEDURES

A. Comply with General Conditions of the Contract regarding Final Inspection and Final Payment when Work is complete and ready for Owner's Representative's final inspection.

B. Provide Project Data and Reports in accordance with Section 35 15 53 – Relief Well Maintenance.

C. Complete or correct items on punch list, with no new items added. Address new items during warranty period.

D. Owner will occupy portions of Work as specified in other Sections.

1.6 FINAL CLEANING

A. Execute final cleaning prior to Final Inspection.

B. Remove waste and surplus materials, rubbish, and temporary construction facilities from site following final test of utilities and completion of Work.

1.7 ADJUSTING (NOT USED)

1.8 OPERATION AND MAINTENANCE DATA (NOT USED)

1.9 WARRANTY

A. Provide copies of each warranty from subcontractors, suppliers, and manufacturers electronically in Owner's online document management system.

B. Submit warranties prior to final progress payment.

C. Warranties shall commence in accordance with requirements in General Conditions of the Contract.

1.10 SPARE PARTS AND MAINTENANCE MATERIALS (NOT USED)

1.11 TEXAS DEPARTMENT OF LICENSING AND REGULATION (TDLR) INSPECTION (NOT USED)

1.12 FINAL PHOTOS

A. Provide per Specification Section 01 32 36.01 – Project Photographs.

1.13 PROJECT RECORD DOCUMENTS (NOT USED)

PART 2 - PRODUCTS (NOT USED)

PART 3 - EXECUTION (NOT USED)

END OF SECTION

SECTION 01 78 39

PROJECT RECORD DOCUMENTS

PART 1 - GENERAL

1.1 SUMMARY

A. Section Includes:

1. Maintenance and Submittal.
2. Recording.
3. Submittals.

B. Related Specification Sections include but are not necessarily limited to:

1. Proposing Requirements, Contract Forms, and Conditions of the Contract.
2. Division 01 – General Requirements.

1.2 MEASUREMENT AND PAYMENT

No separate payment will be made for this item. Include the cost in associated items for this project.

1.3 MAINTENANCE OF DOCUMENTS AND SAMPLES

A. Maintain one record copy of documents at site in accordance with General Conditions of the Contract.

B. Store Record Documents and samples in field office when field office is required by Contract, or in secure location. Provide files, racks, and secure storage for Record Documents and samples.

C. Label each document “PROJECT RECORD” in neat, large, printed letters.

D. Maintain Record Documents in clean dry and legible condition. Do not use Record Documents for construction purposes.

E. Keep Record Documents and Samples available for inspection by Owner’s Representative.

F. Bring Record Drawings to progress review meetings for viewing by Owner’s Representative.

1.4 RECORDING

A. Record information concurrently with construction progress. Do not conceal Work until required information is recorded.

B. Contract Drawings: Legibly mark each item to record actual construction, or “as built” conditions, including:

1. Measured depths of elements of foundation in relation to finish first floor datum.

2. Measured horizontal locations and elevations of underground utilities and appurtenances, referenced to permanent surface improvements.
3. Elevations of underground utilities referenced to bench mark utilized for Project.
4. Measured locations of internal utilities and appurtenances concealed in construction, referenced to visible and accessible features of construction.
5. Field changes of dimension and detail.
6. Modifications made by Change Order.
7. Details not on original Contract Drawings.
8. References to related shop drawings and modifications.

C. Maintain on site at all times an instrument for accurately measuring elevations. Survey every joint of water main at time of construction and record on drawings water main invert elevation, including elevation top of manway and centerline horizontal location relative to baseline.

D. Record information with red felt-tip marking pen on set of blue line opaque drawings.

E. Legibly mark Record Drawings to record:

1. Manufacturer, trade name, catalog number, and supplier of each product and item of equipment actually installed.
2. Changes made by Change Order or Field Order.
3. Other matters not originally specified.

F. Legibly annotate shop drawings to record changes made after review.

1.5 SUBMITTALS

A. At Contract closeout, deliver Project Record Documents to Owner's Representative.

PART 2 - PRODUCTS (NOT USED)

PART 3 - EXECUTION (NOT USED)

END OF SECTION

SECTION 32 92 13

HYDRO-MULCHING

PART 1 - GENERAL

1.1 SUMMARY

A. Section Includes:

1. Seeding, fertilizing, mulching, and maintenance of areas indicated on Drawings.

B. Related Specification Sections include but are not necessarily limited to:

1. Proposing Requirements, Contract Forms, and Conditions of the Contract.
2. Division 01 – General Requirements.

1.2 MEASUREMENT AND PAYMENT

A. No separate payment will be made for this item. Include the cost in associated items for this project.

1.3 SUBMITTALS

A. Conform to requirements of Section 01 33 00 – Submittals.

B. Submit certification from supplier that each type of seed conforms to these specifications and requirements of Texas Seed Law. Certification shall accompany seed delivery.

C. Submit certificate stating that fertilizer complies with these specifications and requirements of Texas Fertilizer Law.

1.4 WARRANTY (NOT USED)

PART 2 - PRODUCTS

2.1 MATERIALS

A. Seed: Conform to U.S. Department of Agriculture rules and regulations of Federal Seed Act and Texas Seed Law. Seed shall be certified 90 percent pure and furnish 80 percent germination and meet following requirements:

1. Rye: Fresh, clean, Italian rye grass seed (lollium multi-florum), mixed in labeled proportions. As tested, minimum percentages of impurities and germination must be labeled. Deliver in original unopened containers.

2. Bermuda: Extra-fancy, treated, lawn type common bermuda (Cynodon dactylon). Deliver in original, unopened container showing weight, analysis, name of vendor, and germination test results.
3. Wet, moldy, or otherwise damaged seed will not be accepted.
4. Seed requirements, application rates, and planting dates are:

TYPE	APPLICATION RATE POUNDS/A	PLANTING DATE
Hulled Common Bermuda Grass 98/88	40	Jan 1 to Mar 31
Unhulled Common Bermuda Grass 98/88	40	
Hulled Common Bermuda Grass 98/88	40	Apr 1 to Sep 30
Hulled Common Bermuda Grass 98/88	40	Oct 1 to Dec 31
Unhulled Common Bermuda Grass 98/88	40	
Annual Rye Grass (Gulf)	30	

B. Fertilizer: Dry and free flowing, inorganic, water soluble commercial fertilizer, which is uniform in composition. Deliver in unopened containers which bear manufacturers guaranteed analysis. Caked, damaged, or otherwise unsuitable fertilizer will not be accepted. Fertilizer shall contain minimum percentages of following elements:
   1. Nitrogen: 10 Percent
   2. Phosphoric Acid: 20 Percent
   3. Potash: 10 Percent

C. Mulch:
   1. Virgin wood cellulose fibers from whole wood chips having minimum of 20 percent fibers 0.42 inches in length and 0.01 inches in diameter.
   2. Cellulose fibers manufactured from recycled newspaper and meeting same fiber content and size as for cellulose fibers from wood chips.
   3. Dye mulch green for coverage verification purposes.

D. Soil Stabilizer: “Terra Tack 1” or approved equal.

E. Weed control agent: Pre-emergent herbicide for grass areas, such as “Benefin,” or approved equal.

PART 3 - EXECUTION

3.1 PREPARATION

A. Dispose of objectionable and waste materials in accordance with Section 01 74 19 – Construction Waste Management and Disposal.

3.2 APPLICATION

A. Seed: Apply uniformly at rates given in Paragraph 2.1 B for type of seed and planting date.

B. Fertilizer: Apply uniformly at rate of 500 pounds per acre.

C. Mulch: Apply uniformly at rate of 50 pounds per 1,000 square feet.

D. Soil Stabilizer: Apply uniformly at rate of 40 pounds per acre.

E. Weed Control Agent: Apply at manufacturer's recommended rate prior to hydro mulching.

F. Sod: Lay single row of sod along perimeter where top soil and pavement intersect.

G. After areas to receive hydromulch seeding have been brought to grade, rake out any foreign materials including stones, hard clay lumps, and other debris.

H. Suspend operations under conditions of drought, excessive moisture, high winds, or extreme or prolonged cold. Obtain Owner's representative approval before resuming operations.

I. Contractor shall confine hydro-mulching to avoid overspray onto paved areas.

3.3 MAINTENANCE

A. Maintain and protect grassed areas minimum of 90 days, or as required to establish acceptable growth. For areas seeded in fall, continue maintenance following spring until acceptable lawn is established.

B. Maintain grassed areas by watering, fertilizing, weeding, and trimming.

C. Repair areas damaged by erosion by regrading, rolling, and replanting.

D. Reseed small, sparse grass areas. When sparse areas exceed 20 percent of planted area, reseed by hydro mulch.

3.4 OWNER TRAINING (NOT USED)

END OF SECTION

THIS PAGE INTENTIONALLY LEFT BLANK

SECTION 35 15 53

RELIEF WELL MAINTENANCE

PART 1 - GENERAL

1.1 SUMMARY

A. The Contractor shall furnish all labor, materials, equipment, chemicals, instrumentation, and incidentals necessary to inspect, test, mechanically clean, and develop one or more relief wells to reduce head losses and improve their performance. The wells shall be mechanically cleaned and re-developed to remove sediment, sludge, bacterial slime, mineral encrustation and clogging. The Contractor shall document the Work, including measurements of water level, flow rate and specific capacity, and video inspection, of each well, before and after mechanical cleaning.

B. Relief well maintenance shall be performed on relief wells identified in each Work Order.

C. Related Specification Sections include, but are not limited to:

1. Proposal Requirements, Contract Forms and Conditions of the Contract.
2. Division 01 – General Requirements.

1.2 MEASUREMENT AND PAYMENT

A. Pre-Maintenance Inspection and Testing of Well: Stipulated Price (Each) per relief well.

B. Mechanical Cleaning and Development Process: Stipulated Price (Each) per relief well.

1. Measurement shall be made per relief well for all labor, equipment, chemicals and other materials, not otherwise specified, for Mechanical Cleaning and Development Process.
2. Payment shall be made for Mechanical Cleaning and Development Process, completed as part of the Work on a per relief well basis.

C. Post-Maintenance Inspection and Testing of Well: Stipulated Price (Each) per relief well.

D. Record of Maintenance (Relief Well Inspection Report forms): Stipulated Price (Lump Sum).

1.3 QUALITY ASSURANCE

A. Maintenance Contractor: The relief well maintenance shall be performed by a Contractor with at least 10 years of experience in the installation, inspection

and testing, and mechanical cleaning of relief wells or similar water wells. Documentation of this experience, along with a minimum of three references and their contact information, shall be submitted by Contractor for approval by the Owner and the Principal Architect / Engineer.

B. Record of Maintenance: The testing and maintenance of each well and appurtenances shall be recorded on a Relief Well Inspection Report form submitted for approval by the Principal Architect / Engineer. **The Relief Well Inspection Report form is included at the end of this specification.** Additionally, example completed forms are also included in Appendix A, Supplemental Information Packet. Contractor shall submit any proposed changes to Relief Well Inspection Report forms to the Principal Architect / Engineer for approval.

C. Pre-Maintenance Reporting: Immediately following Pre-Maintenance Inspection and Testing of any single well, pause work on the well and submit a completed Relief Well Inspection Report to SJRA representative for SJRA review and approval. If SJRA determines the inspection and testing and reporting was performed incorrectly, a re-test will be required at Contractor's expense. Following SJRA approval of the Report, proceed with the Mechanical Cleaning and Development Process.

D. Post-Maintenance Reporting: Immediately following Post-Maintenance Inspection and Testing of any single well, pause work on the well and submit a completed Relief Well Inspection Report to SJRA representative for SJRA review and approval. If SJRA determines the inspection and testing and reporting was performed incorrectly, a re-test will be required at Contractor's expense. Following SJRA approval of the Report, proceed with work on the next well.

E. Maintenance and Protection: Maintain and protect the relief wells from damage throughout the duration of Work. Damage found to the relief wells prior to the initiation of work must be reported to the Owner and Principal Architect / Engineer in accordance with the contract documents. Damaged elements may require repair prior to Work to prevent further damage to the system. Repair methods and costs shall be agreed upon and negotiated to the satisfaction of the Principal Architect / Engineer and Owner, prior to beginning repairs.

F. Inspection: The Principal Architect / Engineer and / or Owners Representative will observe the Work on a full or part-time basis as necessary and shall be notified by the Contractor at least one (1) week prior to beginning any Work.

G. Depth/Elevation Control: All depth readings shall be measured from the top of the manhole or vault opening rim for each relief well. When necessary, place a straight-edge across the opening to use as a datum for measurements.

1.4 SUBMITTALS

A. Prior to commencing Work, contractor shall submit the following for review and approval by the Owner and the Principal Architect / Engineer:

1. A detailed Work Plan, to be submitted for approval at least one week before the start of work. The Work Plan shall include planned procedures and equipment used to perform the specified well maintenance activities. The Work Plan shall detail all facets of the proposed Work, including but not limited to: equipment, procedures, sequence of Work, methods for onsite preparation and control of water, Relief Well Inspection Report forms, and schedule. The Work Plan shall include details of proposed disposal of all sediment, sludge, debris, and other materials produced during the Work.
2. Proposed equipment and procedures for obtaining audio and video documentation of the entire length of the riser pipe and screened sections of each well, before and after the maintenance activities. All files shall be delivered in digital format and shall be of a high enough resolution to allow for the capture of print-quality images for inclusion in reports.

B. Interim Reporting: Immediately following Pre-Maintenance and Post-Maintenance Inspection and Testing of any single well, submit a completed Relief Well Inspection Report to SJRA representative for SJRA review and approval.

C. Upon completion of the Work, Contractor shall submit a Record of Maintenance consisting of completed Relief Well Inspection Report forms that document all activities, including pre- and post-maintenance water levels, flow rates, and specific capacity of each relief well. All reports shall include the elevation at the top of each manhole.

D. Upon completion of the Work, Contractor shall also submit video and photo files captured during pre-maintenance and post-maintenance video inspections. All files shall be delivered in digital format and shall be of a high enough resolution to allow for the capture of print-quality images.

E. See Specification Section 01 33 00 – Submittals for requirements for the mechanics and administration of the submittal process.

1.5 OWNER-SUPPLIED ITEMS

A. Owner shall provide the Contractor with the following:

1. Appendix A, Supplemental Information Packet.

PART 2 - PRODUCTS

2.1 EQUIPMENT

A. All equipment and tools necessary to accomplish the relief well maintenance and any required testing shall be provided by the Contractor.

PART 3 - EXECUTION

3.1 GENERAL

A. Relief well maintenance is defined as the cleaning and development of the system. Work for each well shall proceed as follows:

1. Pre-maintenance activities: Includes inspection, sounding, measurement of water level, artesian flow rate and specific capacity, pump testing, and video inspection.
2. Maintenance: Includes mechanical cleaning, development activities, and removal of all debris.
3. Post-maintenance activities: Includes sounding, measurement of water level, artesian flow rate and specific capacity, pump testing, and video inspection.
4. Maintenance activities including testing and mechanical cleaning can be conducted at more than one well location at a time.

3.2 PRE-MAINTENANCE INSPECTION AND TESTING

A. Measurement and Inspection

1. Pre-maintenance activities shall include measurement of static and flowing water level, measurement of the artesian flow rate, sounding the depth and condition of the bottom of the well, and down-hole video inspection.
2. Flow rate may be measured by bailing or pumping below the normal discharge level and then recording the water level change with time as it rises towards a static level in a temporary riser extension, or other approved method. Water level may be measured with a water level indicator (WLI) or pressure transducer and data logger.
3. Depth shall be sounded with a fiberglass measuring tape weighted with a steel rod. Record total depth, depth to any sediment, bottom condition, and any discrepancy from expected depth. Sounding of well depth shall occur prior to maintenance and be compared to well as-built records.
4. If there is a significant amount of filter sand within the well, possibly indicating damage to the well screen, suspend work on the well and report the findings to the Principal Architect / Engineer. If well has remained reasonably clean, proceed as specified below.

5. Determine the specific capacity by pumping as described below.

B. Pre-Maintenance Testing:

1. General Pre-Maintenance Testing shall include halting the artesian flow, measurement of static water level, measurement of the artesian flow rate, and pump testing to determine pre-maintenance specific capacity.
2. Remove the check valve. Measure from the top of the manhole to the water level at the top of the riser to establish the elevation of the flowing water. Attach a 6-inch diameter PVC riser extension with watertight coupler long enough to reach from well riser to at least one foot above the top of the manhole and allow the water to reach its static level. Allow at least 20 minutes for the water level to become reasonably stable. Provide support to prevent lateral and upward movement of the extension. Suspend a PVC pipe at least 40 feet long in the well to facilitate water level measurement with the water level indicator (WLI). Measure the static water level. Bail or pump the relief well to lower the water level to at least 2 feet below the lower of the static water level or the top of the well riser and allow the water to rise (recover) in the riser and riser extension. Record water level changes versus elapsed time at frequent intervals until the water level reaches within 3 inches of the static level. The recorded water level versus time shall be plotted and used to calculate the flow rate under normal conditions.
3. Test the well production by pumping at a constant discharge rate for at least 30 minutes and measuring the discharge flow rate and water level every 10 minutes. The pumping rate shall produce a drawdown of at least 20 feet from the static level or a discharge of at least 20 GPM, whichever occurs first. If the water level drops too low and suction is lost, reduce the pumping rate, wait until the water level rises within 2 feet of the static level, and re-start the test. Use the same pumping rate and duration for testing after maintenance at each well for accurate comparison of specific capacity and well efficiency, i.e., attempt to produce 20 feet of drawdown or a pumping rate of 20 GPM (or some other approved effective rate) within 30 minutes. The intent is to be able to use specific capacity as the comparison for the wells to the initial specific capacity at the time the well was constructed and to measure effectiveness of the cleaning process. Report pumping duration, discharge, drawdown, and specific capacity for each observation.
4. If the thickness of sediment in the well exceeds 2 inches, remove all solid material from the bottom of the well with an air lift or a semi-trash pump with a long suction line.
5. Following pre-maintenance testing and removal of solid material in the

well, video inspect and record the full circumference and entire length of the screen and riser with a suitable camera. Make audio recordings and written notes of observations made during the inspection, with reference to specific depths and locations. If necessary, perform the video inspection after removal of any debris, slime, or sludge that may interfere with the inspection.

6. **Pre-Maintenance Reporting: Immediately following Pre-Maintenance Inspection and Testing of any single well, pause work and submit a completed Relief Well Inspection Report to SJRA representative for SJRA review and approval. If SJRA determines the inspection and testing and reporting was performed incorrectly, a re-test will be required at Contractor's expense. Following SJRA approval of the Report, proceed with the Mechanical Cleaning and Development Process (Maintenance).**

3.3 MECHANICAL CLEANING AND DEVELOPMENT PROCESS (MAINTENANCE)

A. General

1. The Contractor shall clean each relief well using approved methods to remove clogging deposits and clean the filter pack and the formation walls to produce the maximum feasible yield of water per foot of drawdown. At the time of cleaning and re-development of any relief well, the well shall be free of drawdown due to pump testing, developing or activity at another location.
2. The Contractor shall be responsible for maintaining the needed access, work area, and clearance near the relief well necessary to accomplish cleaning. Mechanical cleaning shall be conducted to achieve a stable well of maximum efficiency. If, at any time during the cleaning and re-development process it becomes apparent that the well may be damaged, work shall be immediately terminated. The Principal Architect / Engineer may require a change in method if the method selected does not accomplish the desired results. Any changes in means and methods shall have prior approval by the Principal Architect / Engineer.
3. Remove sediment, sludge, mineral and biological accumulation prior to the start of and upon completion of Maintenance activities.

B. Maintenance Process

1. Extend or replace the riser extension as needed with 6-inch PVC pipe sufficient to accommodate the static head and halt flow. Observe the interior of the manhole for boiling and loss of filter sand. If this occurs, block the discharge pipe with a pipe plug to halt flow and let the water rise

in the riser extension. If the water begins to overflow the riser extension, install a siphon or pump to carry the water away from the Work area, but do not draw down the water level more than 3 feet below the top of the well riser pipe.

2. Provide a double or triple brush assembly slightly larger than the inside diameter of the screen to provide a vigorous brushing action to remove mineral deposits and scale. Brush the interior of the riser pipe and screen, brushing each 5-foot increment of length for at least 5 minutes. Sound the well to determine the amount of sediment that has accumulated. Remove debris and sediment using a bailer, pump, or airlift until the discharge is clean, but for not less than 15 minutes.

3.4 POST-MAINTENANCE INSPECTION AND TESTING

A. Perform Post-Maintenance Inspection and Testing as per 3.2 PRE-MAINTENANCE INSPECTION AND TESTING above.

B. **Post-Maintenance Reporting: Immediately following Post-Maintenance Inspection and Testing of any single well, pause work on the well and submit a completed Relief Well Inspection Report to SJRA representative for SJRA review and approval. If SJRA determines the inspection and testing and reporting was performed incorrectly, a re-test will be required at Contractor's expense. Following SJRA approval of the Report, proceed with work on the next well.**

3.5 DISPOSAL

A. Water with organic materials may be disposed onsite on the ground surface in locations approved by SJRA.

3.6 REPORTS

A. Records shall be kept daily during the maintenance program. Additionally, Relief Well Inspection Report forms shall be completed for each well:

1. A completed Relief Well Inspection Report form shall be provided upon completion of Pre-Maintenance Inspection and Testing of any individual well.
2. A completed Relief Well Inspection Report form shall be provided upon completion of Post-Maintenance Inspection and Testing of any individual well.
3. A compiled set of all Relief Well Inspection Reports completed for the project shall be provided upon completion of the Work.
4. The forms shall provide sufficient detail to document the process involved at each relief well for the entirety of testing and mechanical cleaning. The

forms will be used to track the condition of the relief wells with time after each maintenance cycle. Relief Well Inspection Report forms shall utilize format as provided by Owner.

B. Items to be documented shall include, but not be limited to

1. Relief well flow rate and specific capacity, before and after maintenance activities.
2. Measurements made in the wells.

END OF SECTION

RELIEF WELL INSPECTION REPORT

Page 1 of 2

Date: _____

Relief Well No.: _____

Circle One: **Pre Maintenance / Post Maintenance**

Project:	Project No.:	Owner:

Inspector: _____ Printed Name _____ Signature _____ Date

General Information

Relief Well Type (Circle One): Manhole Vertical Discharge Tee Discharge

Station/Offset: _____

Casing/Riser ID: _____

	Depth, Feet	Measured Elevation	Plan Elevation
Top of Manhole:			
Discharge:			
Sounded:			
Top of Casing/Riser:			

	Depth, Feet	Measured Elevation	Plan Elevation
Top of Well Screen:			
Sediment:			
Total Depth:			

General Condition			Comments
Easily Accessible:	Y	N	
Good Condition:	Y	N	
Good Rust Protection:	Y	N	
Good Drainage Around the Well:	Y	N	

Mechanical Cleaning

Date:		Start Time:		End Time:			
	As Built Depth to Top of Screen:						
Surging, Brushing, Other	Cycle Number	Depth of Screen Interval	Start Time	End Time	Sounding Depth	Sediment Thickness	Comments

Chemical Treatment

Date:	Start Time:		End Time:				
	As Built inside depth of well:						
Surging, Brushing, Other	Cycle Number	Start Time	End Time	Starting pH	Ending pH	Chemicals Added	Comments

RELIEF WELL INSPECTION REPORT (CON'T)

Date: _____ Page 2 of 2

Relief Well No.: _____

Circle One: **Pre Maintenance / Post Maintenance**

Artesian Flow Test

Date:	Start Time:	End Time:	TOC to Water Outside Casing:
Normal Artesian Flow Rate:			

Time (Min.)	Depth to Water (ft)	Water Level (El)	Calculated Flow Rate (gpm)	Time (Min.)	Depth to Water (ft)	Water Level (El)	Calculated Flow Rate (gpm)

Pumping Test

Date:	Start Time:	End Time:	Static Water Level:

Time	Elapsed Time	Depth to Water (ft)	Flow Rate (gpm)	Total Drawdown (ft)	Specific Capacity (gpm/foot drawndown)	Recovery			
						Time	Elapsed Time	Depth to Water (ft)	Dishcharge Rate (gpm)
0 Min						0 Min			
5						1			
10						2			
15						4			
20						8			
25						15			
30						20			
35						30			
40						40			
45						50			
50						60 Min/ 1 Hr			
55						1.5 Hr			
60 Min/ 1 Hr						2 Hr			

Legend: Water Level and Drawdown in decimal Feet
Discharge Rate in gpm

Notes

APPENDIX A
SUPPLEMENTAL INFORMATION PACKET

Lake Conroe Dam Relief Wells Maintenance
Contract No. 27-0021

1. PROJECT ACCESS EXHIBIT

2. PROJECT LIMITS EXHIBIT

3. CONROE DAM RECORD DRAWINGS, FREESE NICHOLS ENDRESS CONSULTING ENGINEERS, DATED 04/04/1972, (CO 12 SHEETS 1-3)

4. TABLE 1: PRE-EVALUATION RELIEF WELL INSPECTION SUMMARY TABLE

5. EXAMPLE RELIEF WELL INSPECTION REPORT FORMS

Lake Conroe Dam
Relief Wells Access

0 100 200 Feet

N

SJRA
SAN JACINTO RIVER AUTHORITY

Document Date: 4/8/2024 4:02 PM

Document Location: \\sjragis-2019\GIS_2019_DATA\Requests\LakeConroe\D.Sidney\LC Dam Relief Wells Rehab\LC Dam Relief Wells Rehab.aprx

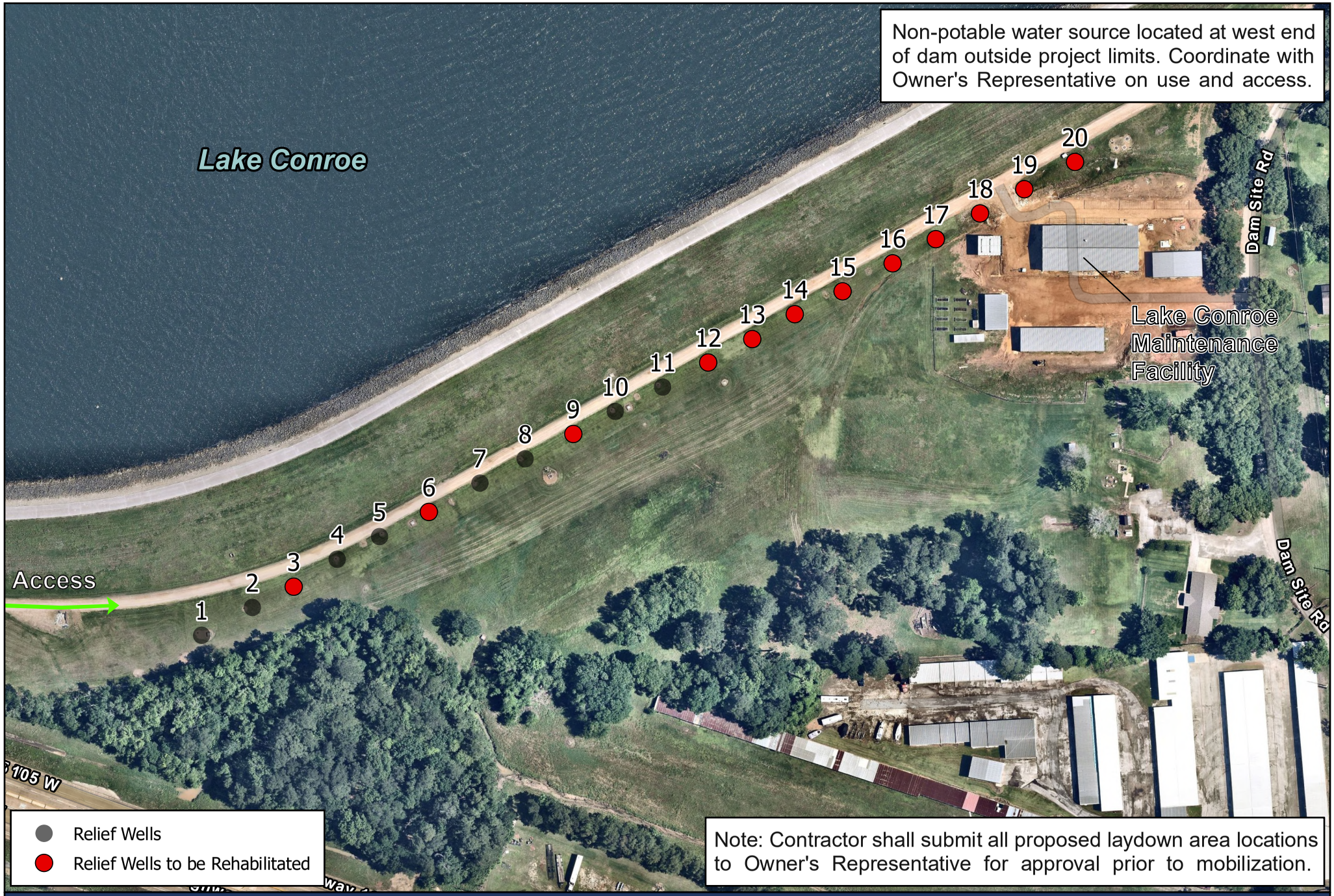

Lake Conroe Dam
Relief Wells Maintenance

0 100 200 Feet

N

SJRA
SAN JACINTO RIVER AUTHORITY

Document Date: 9/30/2026 9:50 AM

Document Location: B:\Requests\LakeConroe\D.Sidney\LC Dam Relief Wells Rehab\LC Dam Relief Wells Rehab.aprx

Table 1. Pre-Evaluation Relief Well Inspection Summary Table

Relief Well		Design / As-Built Data[1]							
		Ground Surface EL[3]	Manhole Top EL[2]	top manhole to top riser (FNI)	Top of Riser EL	Top of Concrete EL	Top of Well Screen	Bottom of Well Screen	As-Built Depth
No.	Type	(ft)	(ft)	(ft)	(ft)	(ft)	(ft)	(ft)	(ft)
1	Manhole	176.53	178.35	6.03	172.32	172.07	159.99	139.99	32.80
2	Manhole	176.33	178.48	6.08	172.40	172.20	158.11	138.11	34.77
3	Manhole	176.40	178.57	6.34	172.23	172.29	155.93	135.93	36.83
4	Manhole	176.76	178.25	5.98	172.27	171.97	154.06	134.06	38.78
5	Manhole	177.17	178.50	6.18	172.32	172.22	152.06	132.13	40.73
6	Manhole	177.94	178.12	6.10	172.02	171.84	149.94	129.97	42.82
7	Manhole	177.76	178.31	6.10	172.21	172.03	150.02	130.05	42.67
8	Manhole	177.20	178.39	6.11	172.28	172.11	150.02	130.07	42.59
9	Manhole	176.95	178.32	6.08	172.24	172.04	150.00	130.00	42.60
10	Manhole	176.81	178.35	6.08	172.27	172.07	150.12	130.12	42.95
11	Manhole	176.78	178.34	6.05	172.29	172.06	148.05	128.05	44.53
12	Manhole	176.72	178.38	6.11	172.27	172.10	148.10	128.10	44.60
13	Manhole	176.47	178.35	6.12	172.23	172.07	147.93	127.97	44.61
14	Manhole	176.65	178.53	6.14	172.39	172.25	148.03	128.11	44.62
15	Manhole	176.45	178.43	6.11	172.32	172.15	148.01	128.10	44.66
16	Manhole	176.23	178.48	6.08	172.40	172.20	145.04	125.11	47.69
17	Manhole	176.72	178.49	6.06	172.43	172.21	154.03	122.11	50.75
18	Manhole	177.33	178.55	6.11	172.44	172.27	154.08	122.13	50.80
19	Manhole	178.19	178.51	6.01	172.50	172.23	153.48	122.08	50.88
20	Manhole	178.53	178.56	6.11	172.45	172.28	155.87	123.15	49.09

Notes: (1) Data from reference drawings and / or well installation reports; (2) Top of manhole survey - GeoSolutions 2015; (3) Ground surface EL - SJRA 12/2017.

EXAMPLE
RELIEF WELL INSPECTION REPORT FORMS

RELIEF WELL INSPECTION REPORT

Date: 3/1/2019
Relief Well No.: RW8
Circle One: **Pre Maintenance / Post Maintenance**

Project: Lake Conroe Relief Wells Rehabilitation	Project No.: LCPR0028.1003.2C001	Owner: San Jacinto River Authority

Inspector:

Nasser Amiry		
Printed Name	Signature	Date

General Information

Relief Well Type (Circle One) **Manhole** Vertical Discharge Tee Discharge

Station/Offset:

Casing/RiserID:

	Depth, Feet	Measured Elevation	Plan Elevation
Top of Manhole:			178.39
Discharge	5.64	172.75	
Sounded:	48.68	129.71	130.07
Top of Casing/Riser:	1.25	179.64	

	Depth, Feet	Measured Elevation	Plan Elevation
Top of Well Screen:			150.02
Sediment:	-0.36	(see notes)	
Total Depth:	48.68	129.71	130.07

General Condition			Comments
Easily Accessible:	Y	N	
Good Condition:	Y	N	
Good Rust Protection:	Y	N	Black coating outside and inside of manhole flaking off.
Good Drainage Around the Well:	Y	N	

Mechanical Cleaning

Date: Start Time: End Time:

Surging, Brushing, Other — As Built Depth to Top of Screen:

Cycle Number	Depth of Screen Interval	Start Time	End Time	Sounding Depth	Sediment Thickness	Comments

Chemical Treatment

Date: Start Time: End Time:

Surging, Brushing, Other — As Built inside depth of well:

Cycle Number	Start Time	End Time	Starting pH	Ending pH	Chemicals Added	Comments

EXAMPLE

RELIEF WELL INSPECTION REPORT (CON'T)

Date: 3/1/2019

Relief Well No.: RW8

Circle One: **Pre Maintenance / Post Maintenance**

Artesian Flow Test

Date: 3/1/2019	Start Time: 9:35	End Time: 9:40	TOC to Water Outside Casing: 6.89

Normal Artesian Flow Rate:

Time (Min.)	Depth to Water (ft)	Water Level (El)	Calculated Flow Rate (gpm)	Time (Min.)	Depth to Water (ft)	Water Level (El)	Calculated Flow Rate (gpm)
0.25	9.42	170.22		3.5	5.65	173.99	0.56
0.5	9.14	170.5	1.64	4	5.48	174.16	0.50
0.75	8.78	170.86	2.11	4.5	5.36	174.28	0.35
1	8.1	171.54	3.99				
1.5	7.23	172.41	2.55				
2	6.48	173.16	2.20				
2.5	6.2	173.44	0.82				
3	5.84	173.8	1.06				

Pumping Test

Date: 3/1/2019	Start 9:45	End Time: 10:15	Static Water Level: 5.35

Time	Elapsed Time	Depth to Water (ft)	Flow Rate (gpm)	Total Drawdown (ft)	Specific Capacity (gpm/foot drawndown)	Recovery			
						Time	Elapsed Time	Depth to Water (ft)	Dishcharge Rate (gpm)
0 Min	0.25	9.55	23.5	4.2	5.60	0 Min	0	0	
5	0.5	13.04	22.82	7.69	2.97	1	1	23.85	
10	0.75	105.35	21.82	100	0.22	2	1.5	19.45	
15	1	16.98	20.54	11.63	1.77	4	2	17.89	
20	2	21.88	20.24	16.53	1.22	8	2.5	15.43	
25	3	25.16	20.2	19.81	1.02	15	3	13.95	
30	5	28.66	20.27	23.31	0.87	20	4	11.54	
35	10	31.43	20.06	26.08	0.77	30	5	9.9	
40	15	32.78	20.18	27.43	0.74	40			
45	20	33.28	20.14	27.93	0.72	50			
50	25	33.8	20.08	28.45	0.71	60 Min/ 1 Hr			
55	30	34.02	20.06	28.67	0.70	1.5 Hr			
60 Min/ 1 Hr						2 Hr			

Legend: Water Level and Drawdown in decimal Feet
Discharge Rate in gpm

Notes

Well sounded deeper than depth recorded in Appendix A Table 1 (well sounded at 48.68ft from top of manhole to bottom, Table 1 indicates a depth of 48.32ft from top of manhole to bottom of well screen.

EXAMPLE

RELIEF WELL INSPECTION REPORT

Date: 6/28/2019
Relief Well No.: RW-8
Circle One: **Pre Maintenance / Post Maintenance**

Project: Lake Conroe Relief Wells Rehabilitation	Project No.: LCPR0028.1003.2C001	Owner: San Jacinto River Authority

Inspector: Nasser Amiry (Printed Name) _____ (Signature) _____ (Date)

General Information

Relief Well Type (Circle One) **Manhole** Vertical Discharge Tee Discharge

Station/Offset:

Casing/RiserID:

	Depth, Feet	Measured Elevation	Plan Elevation
Top of Manhole:			178.39
Discharge	5.71	172.68	
Sounded:	48.98	129.41	130.07
Top of Casing/Riser:	1.45	179.84	

	Depth, Feet	Measured Elevation	Plan Elevation
Top of Well Screen:			159.99
Sediment:	-0.66	(see notes)	
Total Depth:	48.98	129.41	130.07

General Condition			Comments
Easily Accessible:	**Y**	N	
Good Condition:	**Y**	N	
Good Rust Protection:	Y	**N**	
Good Drainage Around the Well:	**Y**	N	

Mechanical Cleaning

Date: Start Time: End Time:

Surging, Brushing, Other — As Built Depth to Top of Screen:

Cycle Number	Depth of Screen Interval	Start Time	End Time	Sounding Depth	Sediment Thickness	Comments

Chemical Treatment

Date: Start Time: End Time:

Surging, Brushing, Other — As Built inside depth of well:

Cycle Number	Start Time	End Time	Starting pH	Ending pH	Chemicals Added	Comments

EXAMPLE

RELIEF WELL INSPECTION REPORT (CON'T)

Date: 6/28/2019
Relief Well No.: RW-8
Circle One: **Pre Maintenance / Post Maintenance**

Artesian Flow Test

Date: 6/28/2019 | Start Time: 12:50PM | End Time: 12:56PM | TOC to Water Outside Casing: 7.16

Normal Artesian Flow Rate:

Time (Min.)	Depth to Water (ft)	Water Level (El)	Calculated Flow Rate (gpm)	Time (Min.)	Depth to Water (ft)	Water Level (El)	Calculated Flow Rate (gpm)
0.25	10.14	169.7		6	5.28	174.56	0.21
0.5	9.07	170.77	6.29				
1	7.88	171.96	3.50				
1.5	7.08	172.76	2.35				
2	6.52	173.32	1.64				
3	5.92	173.92	0.88				
4	5.58	174.26	0.50				
5	5.42	174.42	0.23				

Pumping Test

6/28/2019 | Start Time: 1:05 PM | End Time: 1:40PM | Static Water Level: 5.1

Time	Elapsed Time	Depth to Water (ft)	Flow Rate (gpm)	Total Drawdown (ft)	Specific Capacity (gpm/foot drawndown)	Recovery			
						Time	Elapsed Time	Depth to Water (ft)	Dishcharge Rate (gpm)
0 Min	0.5	11.15	22.26	6.05	3.68	0 Min	0.5	24.5	
5	1	13.84	21.84	8.74	2.50	1	1	20.42	
25	4	22.18	20.8	17.08	1.22	2	2	15.88	
30	5	23.5	20.33	18.4	1.10	4	3	12.74	
35	10	27.82	20.2	22.72	0.89	8	4	10.72	
40	15	28.9	20.14	23.8	0.85	15			
45	20	29.44	20.1	24.34	0.83	20			
50	25	29.7	20.08	24.6	0.82	30			
55	30	29.94	20.04	24.84	0.81	40			
						50			
						60 Min/ 1 Hr			
						1.5 Hr			
60 Min/ 1 Hr						2 Hr			

Legend: Water Level and Drawdown in decimal Feet
Discharge Rate in gpm

Notes

Well sounded deeper than depth recorded in Appendix A Table 1 (well sounded at 38.51ft from top of manhole to bottom, Table 1 indicates a depth of 38.36ft from top of manhole to bottom of well screen.

EXAMPLE

RELIEF WELL INSPECTION REPORT

Date: 6/11 - 6/13

Relief Well No.: 8

Circle One: Pre Maintenance / Post Maintenance

Project: Lake Conroe Relief Well Rehabilitation	Project No.: LCPR0028.1003.2C001	Owner: San Jacinto River Authority

Inspector: _____ Printed Name _____ Signature _____ Date

General Information

Relief Well Type (Circle One): (Manhole) Vertical Discharge Tee Discharge

Phase: ○ Pre-Maintenance ○ Mechanical Cleaning ● Chemical Treatment ○ Post-Maintenance ○ Disinfection

Station/Offset:

Casing/Riser ID:

	Depth, Feet	Measured Elevation	Plan Elevation
Top of Manhole:			
Discharge:			
Sounded:	49.7		
Top of Casing/Riser:	71		

	Depth, Feet	Measured Elevation	Plan Elevation
Top of Well Screen:			
Sediment:			
Total Depth:			

General Condition			Comments
Easily Accessible:	○ Y	○ N	Even though it is the end of the 3rd surge cycle, we induced chems at request of Dan to maintain the PH level below 3 inside the 32 hour window as required by the specs.
Good Condition:	○ Y	○ N	
Good Rust Protection:	○ Y	○ N	
Good Drainage Around the Well:	○ Y	○ N	

Mechanical Cleaning

Date: Start Time: End Time:

As Built Depth to Top of Screen:

	Surging, Brushing, Other	Cycle Number	Depth of Screen Interval	Start Time	End Time	Sounding Depth	Sediment Thickness	Comments
6/11	Surge	1		10AM	11AM			End PH 1.05
6/11	Surge	2		3:25	4:15			End PH 0.99
6/12	Surge	3		9:45	10:35			End PH 3.18
6/13	Sound Well			11:25		49.50		Pre Brush
6/13	Brush			11:30	12:50			
6/13	Sound Well			1:05		49.25		Post Brush

Chemical Treatment

Date: Start Time: End Time:

As Built inside depth of well:

	Surging, Brushing, Other	Cycle Number	Start Time	End Time	Starting pH	Ending pH	Chemicals Added	Comments
6/11	Induce Chems	1	9AM	9:45		2.65	100 Gallons	10 G TOTAL
6/11	Check PH		3:15			0.88	NONE	10 G TOTAL
6/12	Check PH		9:35			2.96	NONE	10 G TOTAL
6/12	Induce Chems	2	11AM	11:30		1.14	20 Gallons	12 G TOTAL

EXAMPLE

SJRA
SAN JACINTO RIVER AUTHORITY

Board Communication

Item No.	Agenda Item	Date
6.10	Consider authorizing the General Manager to approve purchases with Headworks International for an automated rake screen at Wastewater Treatment Facility No. 3 for the Woodlands Division.	**10/22/2026**

BACKGROUND INFORMATION

Firm Name: Headworks International

Type of Agreement: Sole Source

Service: Equipment Purchase

Contract Number: Sole Source

Anticipated Expenditures: $275,000.00

The Woodlands Division utilizes mechanical automated rake bar screens as part of the preliminary treatment process at its wastewater treatment facilities. These screens remove coarse debris and solids from the influent wastewater stream prior to downstream treatment processes.

The Woodlands Division has historically utilized and preferred Headworks International Mechanical Automated Rake (MAR) screens at its facilities due to their durability, reliability, and low operating costs. Currently, approximately 75% of the automated mechanical screens within the Woodlands Division are Headworks MAR screens, providing a consistent equipment standard across the system.

WWTF No. 3 currently utilizes a Huber mechanical bar screen. This equipment has experienced recurring operational failures and has reached the end of its useful service life. Replacement of the existing screen is necessary to improve reliability and maintain effective preliminary treatment at the facility.

Headworks MAR screens are constructed of 316 stainless steel and are custom engineered and fabricated based on the specific application and site requirements. The equipment is designed for continuous wastewater service and provides a robust mechanical screening system suitable for the operating conditions at WWTF No. 3. Because these systems are custom designed and incorporate proprietary mechanical and operational features unique to each manufacturer, obtaining directly comparable competitive quotations can be challenging. Each manufacturer's equipment incorporates its own design, configuration, and proprietary functions, making an "apples-to-apples" comparison between manufacturers difficult.

Staff requests authorization for the procurement and installation of a Headworks International Mechanical Automated Rake screen for WWTF No. 3. This recommendation is based on the Division's established experience with Headworks MAR screens, the existing standardization of Headworks equipment within the system, demonstrated reliability and longevity, and the operational and maintenance efficiencies associated with maintaining a common equipment platform.

FUNDING SOURCE: FY27 Woodlands R & R Fund

ATTACHMENTS: Sole Source Memo and Proposal

RECOMMENDED ACTION

Authorize the General Manager to approve purchases with Headworks International for an automated rake screen at Wastewater Treatment Facility No. 3 in an amount not to exceed $275,000.00 for the Woodlands Division. Sufficient funds were budgeted and are available in Fiscal Year 2027 for this purpose.

SJRA
SAN JACINTO RIVER AUTHORITY

SINGLE/SOLE SOURCE JUSTIFICATION

This form must be completed and approved before initiating a non-competitive purchase from a single or sole source vendor. A *single source* purchase occurs when multiple suppliers may exist, but a specific vendor is chosen for documented reasons. A *sole source* purchase occurs when only one vendor is capable of providing the required goods or services due to unique qualifications, compatibility, proprietary rights, or other justifiable reasons.

Date of Request: 9/22/2026 Requestor: Jacob Everett Department/Division: WO

Contact Phone: (832) 381-4314 Contact E-Mail: jeverett@sjra.net

VENDOR/PURCHASE INFORMATION:

Vendor Name: Headworks International Amount of Purchase: <$250,000.00

Product/Service Being Purchased: Headworks Mechanical Automated Rake Bar Screen

REASON:

- [x] One known source can provide the commodity or service
- [x] Unique source (commodity or service is unique or special in nature)
- [ ] Compatibility (compatibility with existing equipment/systems required)
- [x] Sales territory or product availability is limited within geographical boundaries
- [x] Limited or proprietary systems (additional licenses, updates, specialized replacement parts, etc.)
- [ ] Personal or professional services with specialized knowledge, expertise, skill or education
- [ ] Security/Surveillance (components/systems to prevent terrorists, criminal acts/incidents or acts of war)
- [ ] Other:

COMMENTS/JUSTIFICATION:

Single Source Justification: The Woodlands Division currently operates Headworks Mechanical Automated Rake bar screens at WWTF Nos. 1 and 2, representing approximately 75% of the Division's automated bar screens. Standardizing WWTF No. 3 on the same manufacturer will provide consistency in operation, maintenance practices, replacement parts, staff training, and troubleshooting across the Division. SJRA has demonstrated operating experience with Headworks equipment and has found the units to provide reliable service, durable 316 stainless-steel construction, and acceptable lifecycle operating and maintenance costs. Although other manufacturers produce mechanical bar screens, SJRA is selecting Headworks as a single source based on these documented operational and standardization benefits.

Preliminary Approvals (please check the box and print your name, you can initial next to it if you prefer):

☑ Department Manager Name: Jacob Everett Date: 9/22/2026

☑ Division Manager Name: Chris Meeks Date: 9/22/2026

☑ Procurement Manager Name: Justin Ford Date: 9/23/26

☑ Senior Manager Name: SAMIR S. APPROVED VIA EMAIL 9/25/26 Date: 9/25/26

Final Approval (required if over $25,000):

General Manager Name: Aubrey A. Spear Date: 09/24/2026

General Manager Signature: Aubrey A. Spear

SAN JACINTO RIVER AUTHORITY

BUDGET PROPOSAL

WWaterTech Inc.
Water & Wastewater Technology
PROCESS EQUIPMENT

3104 Washington St.
Waller, TX 77484
P: (936) 372-5272 ♦ F: (936) 372-9224
C: (713)253-9253 ♦ wholt@wwatertechinc.com

TO: San Jacinto River Authority
2436 Sawdust Rd.
The Woodlands, TX 77380

ATT: Mr. Jacob Everett
PH: (832) 381-4314

DATE	SALESMAN	PAGE 1 OF 18
6-Oct-26	WH	

PROJECT NAME:
STP 3 - Headworks Bar Screen

FOR MORE INFORMATION CONTACT:
Wes Holt - WWaterTech, Inc
713-253-9253

Summary of Project:

All equipment costs given are based on current material and freight costs and are subject to change without notice. No installation or startup costs are included, unless otherwise specified.

ITEM	QTY	DESCRIPTION	TOTAL COST
A	1	**Headworks Model MS2 Mechancial Bar Screen**	**$221,086.00**

TOTAL PRICE:

Freight Included? ◉ YES ◯ NO

Delivery Time*: 16-20 Weeks
* Subject to availability at time of order

Notes \ Enclosures:

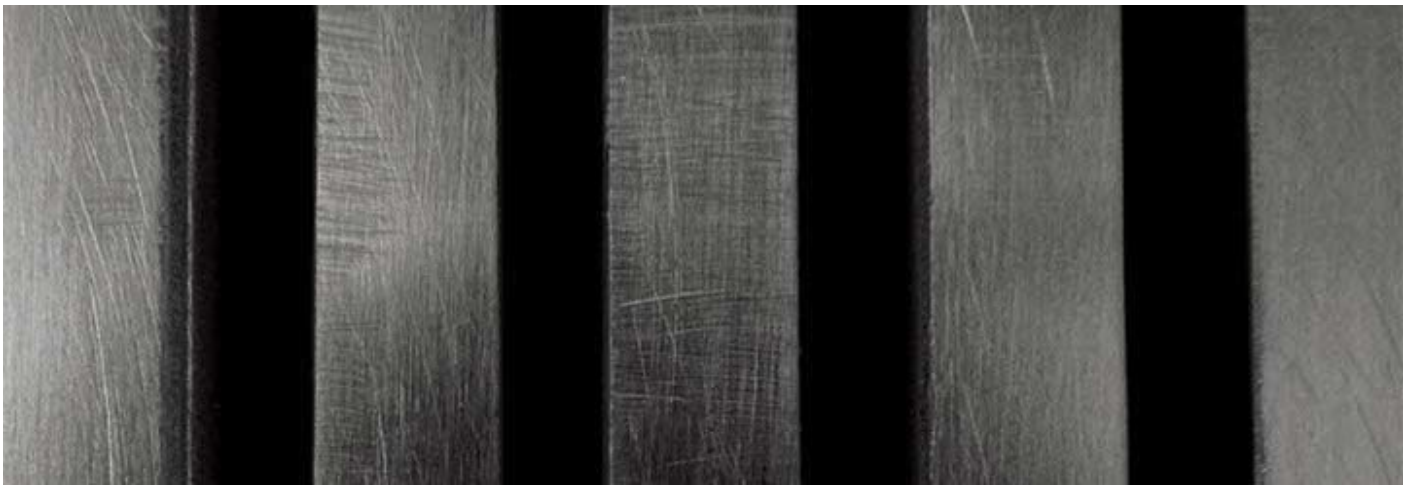

Prepared for:

SJRA WWTP Expansion
TX
B-2024-00730

Submitted by:

Headworks® Inc.

October 6, 2026

Statewide Historically Underutilized Business Program

THIS DOCUMENT CONTAINS PROPRIETARY INFORMATION AND NEITHER THIS DOCUMENT NOR SAID PROPRIETARY INFORMATION SHALL BE PUBLISHED, REPRODUCED, COPIED, DISCLOSED, OR USED FOR ANY PURPOSE OTHER THAN CONSIDERATION OF THIS PROPOSAL, WITHOUT THE WRITTEN APPROVAL OF HEADWORKS INC.

Project Name:	SJRA WWTP Expansion
State/Country:	TX
Rep.Company:	WWaterTech
Offer:	B-2024-00730
Date Offer:	10/6/2026
	V3.4.4

Offer # B-2024-00730
SJRA WWTP Expansion

Thank you for your request for a screen and screenings handling package proposal. Headworks is pleased to offer you the Headworks MS Series Bar Screen Model MS2 for this project.

The Headworks® Bar Screen Model MS2™ design offers the following features:

- Stainless Steel Construction - for corrosion resistance
- Low Profile - requires less than 8 feet of head space
- Low Headloss - even with 1/4 inch openings
- High Hydraulic Capacity - about 2 MGD per ft^2 of screen area
- Electronically Controlled Automatic Reverse - to remove obstructions

Enclosed are our Standard Design Specifications, Offer, Scope of Supply, and General Terms and Conditions, which complete the offer. If you have any questions or comments, please do not hesitate to contact our local Sales Representative, or our office.

Best regards,

Brandon Childs
Headworks Inc.
Inside Sales Engineer Manager

Sales Representative:
Wes Holt
WWaterTech Inc.
Water & Wastewater Technology
+1 713 253 9253

Project Summary:

Equipment	Item	Units	US $
Bar Screen MS2	1	1	
TOTAL PROJECT COSTS			

Project Name:	SJRA WWTP Expansion
State/Country:	TX
Rep.Company:	WWaterTech
Offer:	B-2024-00730
Date Offer:	10/6/2026
	V3.4.4

Item:	**1**
Type of Product	**Bar Screen MS2**

Project Name:	**SJRA WWTP Expansion**	
Offer Number	**B-2024-00730**	
Item Number:	**1**	
No. of Screens	**1**	
Screen Data	**Feet**	**Meter**
SOL Screen Overall Length (approx.)	11.98	3.65
OF Operating Floor to Channel Invert	3.50	1.07
CD Channel Depth	3.50	1.07
CW Channel Width	3.00	0.91
SW Screen Total Width (approx.)	2.84	0.86
SFW Screen Field Width (approx.)	2.02	0.61
WD Water Depth	1.50	0.46
DH Discharge Height	5.00	1.52
SFH Screen Field Height	2.16	0.66
BS Bar spacing	0.25 inch	6.35 mm
Wall Recess	NO	
Floor Recess	NO	
Screen grouted when in recess	NO	
# of Sections/Pieces	1	
Material	SS 316	
Chain Roller Type	Stainless	
Top Enclosed	Yes	
Installation Angle (Degree)	75 deg	
Weight (per screen)	2410 lb	1093 kg
Pull Out Type	Yes	
Pivot Type	NO	
Q max. Specified	3.60 mgd	0.16 m3/s
Q max. (v-Ch. = 0.9m/sec or 3'/s)	6.12 mgd	0.28 m3/s
Q max. (v-Ch. = 0.6m/sec or 2'/s)	4.08 mgd	0.19 m3/s
Headloss at 2'/sec channel velocity	8.98 inch	22.81 cm
Headloss at 3'/sec channel velocity	10.21 inch	25.92 cm

Screen Scope of Supply	**Supplied**
Headworks Bar Screen MS2	YES
Spare Parts	NO
Control Panel (Main NEMA 4X & Local NEMA 7)	YES
Ultrasonic Level Sensor (x2)	YES
Interconnecting Wiring	NO
Training (O&M)	YES

Project Name:	SJRA WWTP Expansion
State/Country:	TX
Rep.Company:	WWaterTech
Offer:	B-2024-00730
Date Offer:	10/6/2026

V3.4.4

GENERAL TERMS AND CONDITIONS

Applicable Terms

These terms govern the purchase and sale of the equipment and related services. If any (collectively, "Equipment") referred to in Seller's quotation, proposal or acknowledgement, as the case may be (Seller's "Documentation"). Whether these terms are included in an offer or an acceptance by Seller, such offer or acceptance is conditioned on Buyer's assent to these terms. Seller rejects all additional or different terms in any of Buyer's forms documents.

Pricing

The price of the Equipment is based upon the following conditions:

20% Upon Approval of Submittals
75% due net 30 days from date of equipment shipment or direction to store
5% Retainage due net 30 days from date of Start-Up, but no later than 180 days from shipment

Pricing is based on receipt of a Purchase Order within 60 days from the date of this Offer and shipment of the equipment not later than 12 months from the date of this Offer. In the event Buyer cannot take the equipment within the stipulated time, the price will escalate 0.5% per month thereafter. All storage costs are for the account of the Buyer.

These terms are independent of and not contingent upon the time and manner in which the purchaser receives payment from the site owner or any other person. Acceptance of order subject to credit approval. All monies not paid when due shall bear interest from the due date to the date paid either (i) at the fluctuating rate of 3% above the Prime Rate as defined below or (ii) the highest rate allowed by law, whichever is lesser. "Prime Rate" is the prime rate in effect on the first business day of the month in which a change occurs, as published in the Wall Street Journal on the next business day.

Payment

Invoices **must** be paid by ACH or Wire. **Checks are not accepted.**
In accordance with ACH best practices, please be sure to confirm transfer details with a member of Headworks' accounting team via telephone prior to setting up any new Headworks bank account.

Validity of Quotation:

60 days from date of offer.

Unless specifically stated in our Offer, this quote is only valid for the listed quantities. If different quantities are desired please inform Inside Sales before issuing a PO as pricing may differ.

Prices are valid at the time of submission; however, they do not take into account possible future impacts of tariffs. Pricing is subject to revision and no purchase order will be accepted until pricing is reviewed and confirmed. We appreciate your patience and understanding as we monitor this situation and work to confirm and mitigate the effects of tariffs on pricing with our vendors.

Bonds:

Unless specifically stated in our Offer, No Performance Bonds, Payment Bonds, Supply Bonds, Maintenance or any other type of Bonds and any related expenses are included. Any acceptance to provide Bonds will only be considered prior to the Offer.

Ownership of Material

All devises, designs (including drawings, plans and specifications), estimates, prices, notes, electronic data and other documents or information prepared or disclosed by Seller, and all related intellectual property rights, shall remain Seller's properties. Seller grants Buyer a non-exclusive, non transferable license to use any such material solely for Buyer's use of the equipment. Buyer shall not disclose any such material to third parties without Seller's prior written consent.

Project Name:	SJRA WWTP Expansion
State/Country:	TX
Rep.Company:	WWaterTech
Offer:	B-2024-00730
Date Offer:	10/6/2026
	V3.4.4

Changes
Seller shall not implement any changes in the scope of work described in Seller's documentation unless Buyer and Seller agree in writing to the details of the changes and any resulting price, schedule, or contractual modifications. This includes any changes necessitated by a change in applicable law occurring after the effective date of any contract including these terms.

Stainless Steel Price Increases:
All Orders accepted, are subject to the following terms:

Headworks® Inc. reserves the right to adjust the price of the equipment based on increases in the price of stainless steel. This increase would be based on stainless steel price increases (including surcharges) as published monthly in the U.S. with the base price being that price (including surcharges, if any) published on the date of this offer. Such price increase only affects the cost of the stainless steel material portion of the affected equipment. Regardless of anything stated elsewhere, an increase in costs of manufacture due to tariffs or tariff like charges shall be passed on directly to Buyer regardless of the material or component.

Force Majeure
“Force Majeure” shall mean any act or event which is outside the reasonable control of a party including, without prejudice to the foregoing generality, Acts of God, epidemics, tidal waves, explosions, lightning, earthquakes, hurricanes, wars (whether declared or not), riots, strikes and industrial actions (other than among the employees of party seeking to rely on such event, or its subcontractor), civil and military disturbances and unrest, acts of the public enemy, action or inaction of the government or governmental authorities or of representatives thereof. If Headworks is prevented from or delayed in performing its obligations as a result of Force Majeure, such prevention or delay shall not be considered a breach of the Agreement, but shall for the duration of such event relieve Headworks of its respective obligations thereunder. Should the Force Majeure suspension period last for more than one (1) month, Headworks may terminate this quote or agreement.

Freight Terms
Equipment is sold FOB point of manufacture with freight included in the above price to the nearest specified destination, provided suitable access roads exist for the delivery carrier(s).

Shipment Schedule
16 - 20 weeks ex works after receipt of approved submittal drawings.

Start-Up and Operator Training
1 trip of up to 3 consecutive days included.

Submittals
Technical submittal drawings for review, authority examination and approval shall be furnished to the buyer within 3 - 4 weeks of order acceptance. The buyer shall approve the submittals within 4 weeks from receipt.

Taxes
Federal, state and local taxes, if any, are not included in the above prices. All applicable taxes are for the purchaser's account.

Patent Protection
Various Headworks equipment contain proprietary information covered by a number of patents and patents pending in the USA and in many international countries. For a full list of the approved patents, please contact Headworks Inc. Legal department in Houston, Texas.

Project Name:	SJRA WWTP Expansion
State/Country:	TX
Rep.Company:	WWaterTech
Offer:	B-2024-00730
Date Offer:	10/6/2026
	V3.4.4

Headworks® Bar Screen Warranty:

The seller warrants all equipment of its own manufacture to be free of defects caused by faulty material or workmanship for a period of eighteen (18) months from date of shipment or twelve (12) months from date of start-up, whichever first occurs. Headworks will replace or repair any part or parts which upon examination shall show to have failed under normal use and service by the original user within the warranty period. In the event that defects develop during the warranty period, under normal and proper use, Headworks is to be notified promptly and with their consent the products are to be returned to Headworks F.O.B. Headworks factory at Buyer's expense. In the case of components purchased by Headworks and incorporated into the equipment, such as Electrical Controls, Instrumentation, Electrical Motors, Gear Reducers and related items, Headworks warranty is limited to the individual manufacturer's warranty for that component, usually one year. This warranty does not apply to equipment or parts thereof which have been altered or repaired other than by a representative of Headworks, or damaged by improper installation, application, erosion or corrosion of any sort, or subjected to misuse, abuse, neglect or accident.

THIS WARRANTY, INCLUDING THE STATED REMEDIES, IS EXPRESSLY MADE BY HEADWORKS AND ACCEPTED BY PURCHASER IN LIEU OF ALL OTHER WARRANTIES, INCLUDING WARRANTIES OF MERCHANTABILITY AND FITNESS FOR A PARTICULAR PURPOSE, WHETHER WRITTEN, ORAL, EXPRESS, IMPLIED, OR STATUTORY. HEADWORKS NEITHER ASSUMES NOR AUTHORIZES ANY OTHER PERSON TO ASSUME FOR IT ANY OTHER LIABILITIES WITH RESPECT TO ITS EQUIPMENT. HEADWORKS SHALL NOT BE LIABLE FOR NORMAL WEAR AND TEAR, NOR FOR ANY INCIDENTAL OR CONSEQUENTIAL DAMAGE DUE TO INOPERABILITY OF ITS EQUIPMENT FOR ANY REASON NOR ANY CLAIM THAT ITS EQUIPMENT WAS NEGLIGENTLY DESIGNED OR MANUFACTURED.

Termination

Buyer may at any time terminate this order or any part hereof for its sole convenience. In the event of such termination, Seller shall immediately stop all work hereunder, and shall immediately cause any of its suppliers or subcontractors to cease such work. Seller shall be paid a reasonable termination charge consisting of a percentage of the order price reflecting the percentage of the work performed prior to the notice of termination, including without limitations any and all engineering work completed in submittal preparation, plus actual direct costs resulting from termination. Seller shall not be paid for any work done after receipt of the notice of termination, nor for any costs incurred by the Seller's suppliers or subcontractors which Seller could reasonably have avoided. Buyer will make no payments for finished work, work in process, or raw material fabricated or procured by the Seller in excess of any order or release.

Project Name:	SJRA WWTP Expansion
State/Country:	TX
Rep.Company:	WWaterTech
Offer:	B-2024-00730
Date Offer:	10/6/2026

V3.4.4

Dispute Clause

Any claim, dispute or other matter in question between Supplier and Owner, arising out of or relating to either's obligations to the other under this Contract, shall, if possible, be resolved by negotiation between Supplier's and Owner's designated representatives for the applicable Purchase Order. Supplier and Owner each commit to seeking resolution of such matters in an amicable, professional and expeditious manner so as to avoid unnecessary losses, delays and disruptions to the Work. If a matter cannot be resolved by the parties' designated representatives for the applicable Purchase Order, no later than thirty (30) days after the designated representatives fail to reach agreement, representatives from executive management of Supplier and Owner shall attempt to resolve the matter.

If resolution cannot be reached by the parties' executive managers, no later than thirty (30) days after the executive managers fail to reach agreement, the parties shall submit the dispute to non-binding mediation. The parties shall select a mediator and a mediation location that are mutually acceptable.

If resolution cannot be reached by the parties through mediation, within thirty (30) days after the mediation has concluded, either party may file suit in a court of competent jurisdiction in the county of the state in which the Work Site is located. If a Purchase Order required Work to be performed at more than one Work Site in more than one state, the exclusive venue for suit shall be a court of competent jurisdiction in Harris County, TX.

Presence of High Grit Levels, Stones and Rocks

The presence of high levels of Grit, Stones and/or Rocks that can impair the normal operation of Headworks' products, develop premature wear and/or cause damage to it's products is not covered under the Headworks Inc. Standard Warranties unless strictly expressed in writing. This policy is in effect for the Bar Screen, Perforator™, Eliminator™, Spiralman™, Transporter™, Transpactor™, & Screwpactor™.

Limitation of Liability

In no event shall Seller be liable for anticipated profits or for incidental or consequential damages. Seller's liability on any claim of any kind for any loss or damage arising out of or in connection with or resulting from this contract or from the performance or breach thereof shall in no case exceed the price allocable to the goods or services which gives rise to the claim. Seller shall not be liable for penalties of any description. Any action resulting from any breach on the part of Seller as to the goods or services delivered hereunder must be commenced within one (1) year after the cause of action has accrued.

Notes & Clarifications

1. Anchor Bolts and Epoxy are not included in Headworks' Scope of Supply. Headworks does not have any knowledge of the Concrete Design, existing or future. Headworks will include in its Project Submittal the Anchor bolt locations and loads in the submittal for the design and supply of Anchor Bolts by others. No Seismic Calculations are included, if required. No PE Stamps are included, if required. No Vibration/Sound Testing is included, if required.

2. Prices are valid at the time of submission; however, they do not take into account possible future impacts of tariffs. Pricing is subject to revision, and no purchase order will be accepted until pricing is reviewed and confirmed. We appreciate your patience and understanding as we monitor this situation and work to confirm and mitigate the effects of tariffs on pricing with our vendors.

3. Headworks has not considered any Domestic Preference requirements in generating this proposal. If any are required, Contractor to advise specific reference for Headworks' review and adjustment to the proposal.

4. All Stainless-Steel material purchased will be provided to Headworks pickled and passivated at the mill. Our offer is based on Headworks Inc. standard material finish where all stainless-steel surfaces shall be glass Bead Blasted prior to equipment assembly. The Bead Blast shall remove all weld discoloration and surface contaminants and provide for Spontaneous Passivation as recognized in ASTM A380, Cleaning, Descaling, and Passivation of Stainless-Steel Parts, Equipment, and Systems, 1. Scope, 1.1.1.1.
   All purchased components such as motors, reducers, valves, switches, etc. that are not Stainless Steel shall be supplied with the manufacturers' standard coating / finish.

5. Our offer is based on Headworks' standard design, standard control panel, material thicknesses, and features as detailed in the attached specification.

6. Our offer does not include any spare parts, if required.

11000 Brittmoore Park Drive | Houston, TX 77041 USA
[t] +1.713.647.6667 [f] +1 713.647.0999 [e] hw@headworksintl.com [w] www.headworksintl.com

Item No.	Part	Material
1	Side Frame	304/316 SS
2	Discharge Chute	304/316 SS
3	Floor Channel	304/316 SS
4	Top Cover	304/316 SS
5	Lifting Pad	304/316 SS
6	Screenfield Support	304/316 SS
7	Sole Plate	304/316 SS
8	Seal	BUNA N
9	Chain Adjuster	304/316 SS
10	Reducer & Motor	CAST IRON
11	Taper Bar (Removeable)	304/316 SS
12	Screen Covers	POLYCARBONATE/SS
13	Cover Knobs	PLASTIC

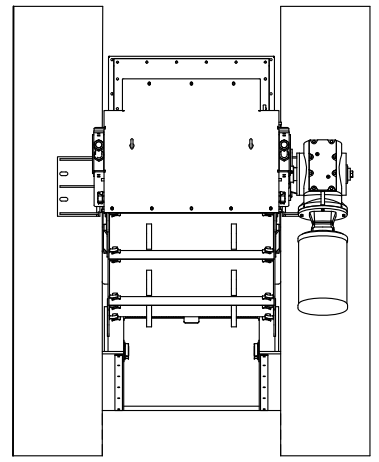

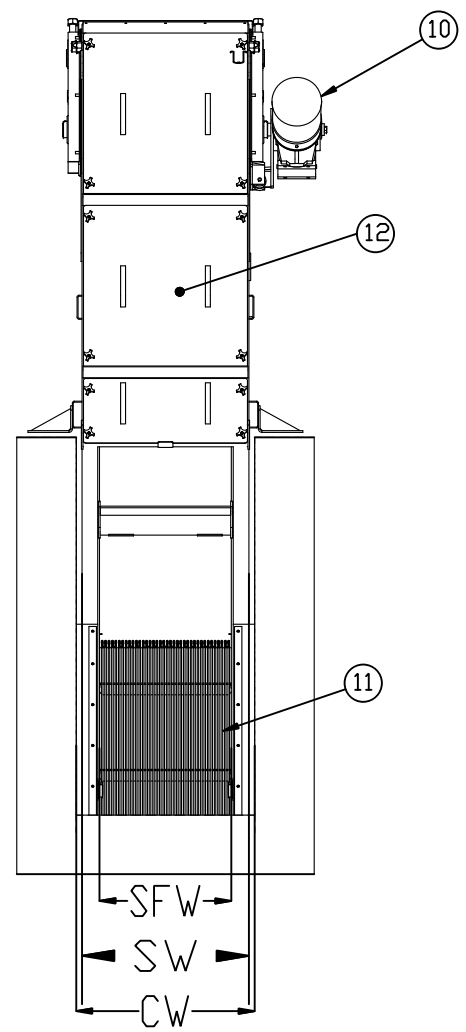

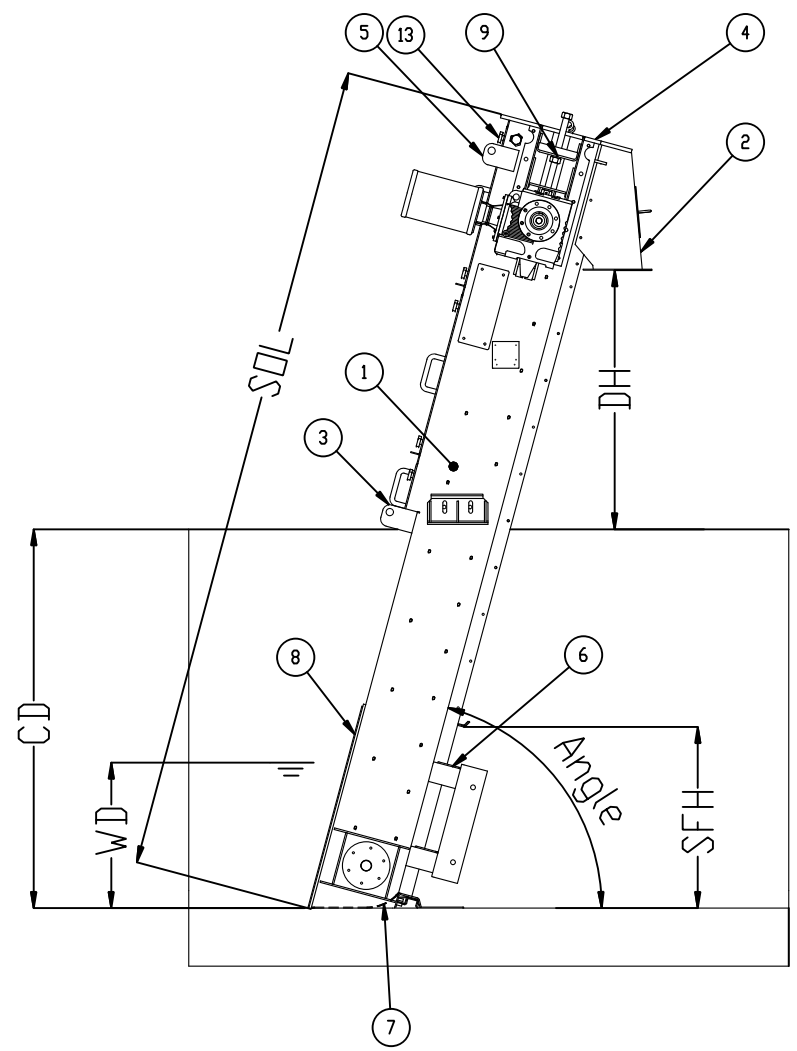

SCREEN FIELD WIDTH .....SFW
SREEN FRAME WIDTH.....SW
CHANNEL DEPTH.....CD
CHANNEL WIDTH.....CW
DISCHARGE HEIGHT.....DH
SCREEN FIELD HEIGHT.....SFH
SCREEN OVERALL LENGTH.....SOL
WATER DEPTH.....WD

Rev	DESCRIPTION	NAME	DATE
0	FOR INFORMATION ONLY		

DRAWN BY: DATE:
CHECKED BY: DATE:

SCALE: 1:40
PROJ. NO:
PLANT:
LOCATION:

MS SERIES BAR SCREEN
MODEL MS2
TEMPLATE DRAWING

No. 12 Yr. 14 Rev: 0 Sht: 1 of 1

Headworks Inc.
11000 Brittmoore Park Dr.
Houston, Texas 77041

Suggested Specification for a Headworks® Bar Screen Type MS2
Revised August 2025

NOTICE: The following specification is written for Grade 316 stainless steel. Changes are required for Grade 304 stainless steel.

MECHANICALLY CLEANED HEADWORKS® BAR SCREEN TYPE MS2

PART 1 – GENERAL

1.01 DESCRIPTION

Furnish, install, and test mechanically cleaned screening equipment.

1.02 SYSTEM

a. Screen shall remove solids from raw wastewater.
b. Screenings shall be mechanically raised on screen to the debris plate and automatically discharged as indicated on the plans or specified herein.

1.03 QUALITY ASSURANCE

a. All materials shall be new, of high grade, and with properties best suited to the working environment.
b. Manufacturer shall be successful in the experience of manufacture, operation, and servicing of equipment of type, size, quality, performance, and reliability equal to that specified. The manufacturer shall submit evidence of experience having supplied at least twenty-five (25) installations of similar type and size in the USA that have been in successful operation for at least five (5) years.

1.04 SUBMITTAL

a. The manufacturer shall submit a general arrangement drawing that illustrates the layout of the equipment and principle dimensions, and other related data including descriptive literature, electrical control drawings, and catalog cut sheets for individual components and drive motor data.
b. The manufacturer shall submit the location of the nearest permanent service headquarters of the screen and motor manufacturer for the screen and motor submitted.
c. The manufacturer shall submit operating instructions with descriptive literature indicating materials of construction, weights, principle dimensions, and other important details.
d. The manufacturer shall submit evidence of experience in the form of a current installation list.

1.05 DELIVERY, STORAGE, & HANDLING

a. Shipping
    i. Ship equipment, material, and spare parts complete except where partial disassembly is required by transportation regulations, for protection of components, or for installation requirements.
    ii. Pack spare parts in containers bearing labels which clearly designate contents and pieces of equipment for which they are intended.

b. Receiving
    i. Contractor shall store and safeguard equipment, material, and spare parts.

PART 2 – PRODUCTS

2.01 MANUFACTURERS

a. Screen shall be the Headworks® Bar Screen Type MS2 as manufactured by Headworks Inc. or pre-qualified equal. All pre-qualification proposals must be submitted to the owner's representative a minimum of fourteen (14) days prior to bid opening. Any pre-qualification proposal failing to meet that deadline will not be considered. Pre-qualification package shall include, but not be limited to, the following:
    i. Complete set of dimensional drawings with descriptive information
    ii. Process equipment electrical requirements with schematic diagrams
    iii. Control panel layout diagram with details on related components
    iv. Detailed list of deviations from contract documents and specifications

2.02 PROVISIONS

a. Screen shall be mechanically cleaned. Incline of bar screen shall be _____ degrees from vertical. *(The range is from zero (0°) to fifteen (15°) degrees)*
b. Rakes shall approach channel invert from upstream side of screen and rake upward at upstream face with tines between the bars.
c. Neoprene side seals shall seal the screen to the channel walls.
d. Screenings shall be discharged on the downstream side of the screen to a_____.
e. Framework of screen shall be constructed of Grade 316 stainless steel with cross section of minimum thickness 3/16". Various parts fastened by welding or bolting shall be braced as necessary to ensure a rigid structure. The side frames shall be minimum 3/16" formed to a channel profile. The bottom thickness shall be a minimum of 3/16". The frame shall have support beams with U-profile thickness of 3/16" on the front above the maximum water line.
f. The screen frame shall be supplied in one piece, requiring no field assembly.
g. The drive mechanism for the rakes shall incorporate a solid shaft constructed of Grade 316 stainless steel.
h. Bolts and nuts shall be of Grade 316 stainless steel or other acceptable corrosion-resistant material. Anchor bolts shall be Grade 316 stainless steel and furnished by the installing contractor.
i. The screen field shall consist of continuous bars of Grade 316 stainless steel with a trapezoidal cross-section. The dimensions of the bars are .31" x .15" x 1.57" (8mm x 4mm x 40mm) **OR** .47" x .23" x 1.97" (12mm x 6mm x 50mm) for bar spacing >3/8" (10mm).
j. Round, teardrop, or rectangular bars shall not be used.
k. The screen field shall be supported from framework. The screen bars shall be individually replaceable without any welding or cutting. Bars that are welded to the framework or

welded into sub-assemblies shall not be allowed. Replacement screen bars shall be available from the screen manufacturer.

l. Bars shall be fastened to a debris plate that extends to the point of discharge. Bars shall extend a minimum of 8” (200mm) above the maximum water level, but not to exceed top of channel.

m. The screen field shall be accurately constructed to give a clear opening of ____ inches (____mm) between the bars. There shall be no space wider than the opening between the bars which would permit passage of larger solids through the screen.

n. Debris plate of Grade 316 stainless steel plate (thickness is minimum 3/16”) shall extend to the point of discharge. Debris plate shall be true and flat such that a close clearance between the raking tines and the plate can be maintained during the cleaning cycle. The debris plate shall be constructed to ensure a minimum and maximum gap between rake bar and debris plate, leading to the discharge chute without interruption.

o. Screenings transported to the top of the screen shall be discharged positively by means of a scraper mechanism to the discharge chute. A scraper blade made of a synthetic material shall be provided on the scraper mechanism.

p. The raking tines shall have the tooth profile precision cut from a sufficient thickness and depth to ensure adequate stiffness and strength to cope with the specified duty cycle. The rakes shall run in guides on both sides to ensure engagement and clean the bars from the upstream side of the screen. The rakes shall be fabricated from Grade 316 stainless steel. The rake material thickness shall be as follows:

Thickness of rake bar	3/8 inch
Reinforcement profile	1/4 inch
Side plates	3/8 inch

q. The rake capacity shall be as follows:

Capacity/Rake Bar: 0.074 ft^3/ft Screen Field Width (SFW)

Total Screen Capacity at approx. 10 second cleaning interval (ft^3/h)
_____ = 0.074 ft^3 x SFW (ft) x 360

Total Screen Capacity at approx. 5-second cleaning interval (ft^3/h)
_____ = 0.074 ft^3 x SFW (ft) x 720

r. Rakes shall have a shovel shape to prevent screenings from falling back to the channel. Flat rakes without this feature are not permitted.

s. Rake tines shall penetrate into the screen bar spacing to ensure that screenings are completely cleared during each lifting operation. Rake tines are mechanically engaged into the screen bars. During each cleaning stroke, the raking tines shall engage into the bottom of the bar screen grids at the channel invert.

t. Drive chains, chain guides, chain sprockets, bearings, and shafts shall be fully replaceable without having to remove the screen from the channel.

u. The upper sprocket shall be made of Grade 316 stainless steel. The upper sprocket shall have a 125mm pitch and a tooth width of minimum 27mm. No split sprockets shall be used.

v. Upper bearings shall be UCFX Type or equal; housed bearings are grease-lubricated and mounted to the take-up frame assembly. No bearings shall be submerged in the waste stream

w. The lower turn guide shall measure:

Pitch	4.92”
Disk Width	0.875”
Outer Diameter	10.695”
Inner Diameter	9.195”

x. Chains shall be heavy duty roller type with a minimum weight of 6 lbs./ft. Chain Side Bars and Chain Rollers shall be heavy duty and manufactured of Grade 316 stainless steel of high tensile strength and resistant to corrosion.
   i. Chain Pins shall be 17-4 PH Stainless Steel.
   ii. Chain Bushings shall be 420 Stainless Steel.
   iii. The average ultimate strength of the chain shall be minimum 31,000 pound-force.

y. Chain guides shall be securely fixed to the screen frame for the full height of travel and shall not protrude into the flow. The type of chain guide, thickness of material, and size is an L-profile, 2.5"/1.3125"/0.1875" (upper) and 2.687”/1.5”/0.1875” (lower), material Grade 316 stainless steel. Replaceable wear strips on chain guides located below the water level shall not be allowed.

z. The drive motor shall be maximum 3 HP. The motor shall be an inverter duty rated motor with a 1.0 service factor, rated for continuous duty. The motor shall be controlled by a VFD (variable frequency drive), rated for continuous operation. Enclosure shall be rated applicable for the specific installation environment. The drive unit, including the reduction gearbox, shall be directly shaft mounted and shall be positioned to facilitate maintenance work.

aa. A VFD and a PLC (programmable logic controller) shall be provided. VFD shall have solid state overload integral. On meeting a blockage, the device shall be able to automatically reverse the direction of travel of the raking mechanism for an adjustable distance and revert to the forward motion to try to clear the blockage. This reversing action can occur a maximum of three times for any one obstruction. The device shall reset automatically if the blockage causing the initial overload condition is cleared; should the blockage remain upon the completion of the fourth attempt, the screen shall be tripped and an alarm generated. The reverse function shall operate the screen in reverse at the low speed.

bb. The raking mechanism shall be capable of two cleaning speeds. Normal speed shall have an approximate ten second cleaning interval and high speed shall have an approximate five second cleaning interval. Screens which do not meet these performance criteria will not be considered.

cc. A discharge chute (thickness is minimum 3/16”) shall be provided for each screen to divert screenings discharged from the screen to a _____. The discharge chute shall be made of Grade 316 stainless steel. The discharge chute shall be mounted at an angle of 30 degrees. Panels are positioned on both sides to protect from splashing.

dd. Covers, which are easily removable, shall be provided for easy maintenance. Covers shall be constructed of clear, impact-resistant polycarbonate material (thickness is minimum 1/4") to allow for visual observation during screen operation. Polycarbonate covers shall have reinforced plastic pull handles. Polycarbonate covers shall be held in place with threaded plastic hand knobs. Stainless steel covers shall not be used.

ee. Top enclosed: The discharge chute and top of screen shall be fully enclosed.
The top of the frame shall be covered with a minimum 11 gauge Grade 316 stainless steel cover, bolted to the front and back of the screen frame. The sides of the top cover shall be bent to overlap the side frames. The rear cover shall be made of 1/4" clear, impact resistant, polycarbonate to allow for visual inspection during screen operation. The polycarbonate cover shall be held in place with threaded plastic hand knobs.

2.03 SEQUENCE OF OPERATION – Dual Speed Operation

Main Panel *On/Off*	**Local Panel** *Hand/Off/Auto* *&* *Fwd/Off/Rev*	**Result**	**Action when Blockage occurs**	**Comments**
On	*Auto* *&* *Any Position*	Screen starts in LSP when the rising water differential reaches set level (Level 1).	Screen performs cleaning shuttle up to 4 times. If unsuccessful, screen stops and initiates alarm contact.	LSP - Low Speed Mode (approx. 10-second cleaning interval)
On	*Auto* *&* *Any Position*	Screen starts in HSP when the rising water differential reaches set level (Level 2.)	Screen performs cleaning shuttle up to 4 times. If unsuccessful, screen stops and initiates alarm contact.	HSP – High Speed Mode (approx. 5 second cleaning interval)
On	*Auto* *&* *Any Position*	Exercise Cycle	Screen performs cleaning shuttle up to 4 times. If no success, screen stops and initiates alarm signal.	X min in LSP, every Y min. (X & Y are Operator adjustable)
On	*Hand* *&* *Forward*	Screen operates forward in LSP.	Screen stops immediately. No cleaning shuttle.	
On	*Hand* *&* *Reverse*	Screen operates in reverse in LSP.	Screen stops immediately. No cleaning shuttle.	
On	*E-Stop Engaged*	Screen stops immediately.	N/A	
On	*Off* *&* *Any Position*	Screen will not operate.	N/A	
On	*Hand* *&* *Off*	Screen will not operate.	N/A	
Off	*Any Position* *&* *Any Position*	Screen will not operate.	N/A	

2.04 BAR SCREEN CONTROLS

a. A bar screen main control panel shall be furnished, completely pre-wired and tested, requiring only wall mounting and connection to interconnecting wiring in the field by an electrical contractor. The control panel shall include all equipment required to control one or more bar screen(s) as specified herein. The control panel shall bear a serialized UL 508, UL 698A, or cUL label when applicable and shall be manufactured by a CSIA certified panel shop. The panel shall be located in a non-classified area where no corrosive gases are present.

b. The control panel enclosure shall be sized as required to house equipment and shall be suitable for wall mounting or mounting to strut-type supports. The enclosure shall be rated NEMA 4X Grade 304 stainless steel.

c. Each bar screen motor shall be controlled by a ABB ACS 500 Series VFD with an internal swinging choke, sized as required for bar screen motor horsepower and suitable for use with variable torque loads. VFD shall include discrete and analog input and outputs as required by control panel manufacturer. No bypass starters will be required.

d. The VFD(s) shall be controlled by an Allen Bradley Micro850 Series PLC with necessary extended I/O. The PLC shall be used to control the VFD to operate the screen at two (2) speeds and through the automatic reversing/cleaning shuttle sequence. The PLC shall include discrete and analog inputs and outputs as required.

e. Each screen shall be controlled in synchronization with ultrasonic level sensors. Upon reaching a predetermined differential set point the screen shall begin operation in low speed and shall shut down after a predetermined time if the differential level is less than the predetermined set point. Upon reaching a second, higher predetermined differential set point, the screen shall operate in high speed.

f. When an overcurrent is detected, the screen shall automatically stop and run in reverse for a predetermined time. The screen shall then stop and return to forward. If the cause of the overload is cleared, the screen shall automatically reset to normal operation. If an overload is again detected, the reversing cycle is repeated up to four (4) times prior to initiating an alarm contact. The use of clutches, friction disks, or similar devices for overload protection are not acceptable.

g. The control panel shall have an OIT (Operator Interface Terminal) to allow adjustment of counter values, timers, and level set points without connecting to the PLC. The OIT shall be rated NEMA 4X and provide fault and operational information.

h. Door mounted NEMA 4X indicating lights shall be provided to indicate running and alarm status of the bar screen. Legend plates and a door mounted alarm reset push button shall also be provided.

i. Local control station(s) shall be provided at the bar screen(s) and shall be fitted a push button emergency stop switch, a Hand-Off-Auto switch, and a Forward-Off-Reverse switch. The local control station enclosure(s) shall be rated NEMA 7.

2.05 SPARE PARTS (Optional)

a. The following minimum recommended spare parts shall be provided for mechanically cleaned screens:
   i. One (1) set of scraper arm wear pads
   ii. One (1) five-foot chain segment
   iii. Two (2) rake bars

2.06 DESIGN DATA

a.	Quantity of Bar Screens	____ each
b.	Channel Depth	____ feet
c.	Channel Invert to Operating Floor	____ feet
d.	Channel Width	____ feet
e.	Discharge Height above Floor Level	____ feet
f.	Maximum Water Depth	____ feet
g.	Bar Spacing	____ inch
h.	Screen Field Width	____ feet
i.	Maximum Design Flow per Bar Screen	____ MGD
j.	Screen Incline from Vertical	____ degrees
k.	Screen shall be installed in a floor recess	Yes/No
l.	Screen shall be installed in a wall recess	Yes/No
m.	Screen shall be pivot type	Yes/No
n.	Screen shall be enclosed on top	Yes/No
o.	Screen Location	Indoor/Outdoor

2.07 SURFACE FINISHES AND COATINGS

a. After all fabrication and welding has been completed, all stainless steel surfaces shall be glass bead blasted prior to equipment assembly. The bead blast shall remove all weld discoloration and surface contaminants and provide for spontaneous passivation as recognized in ASTM A380.
b. All purchased components such as motors, reducers, valves, switches, etc. shall be supplied with the manufacturer's standard finish.

<u>PART 3 – EXCECUTION</u>

3.01 INSTALLATION

Equipment shall be installed in strict conformance with manufacturer's recommendations.

3.02 MANUFACTURER'S SERVICES

The equipment manufacturer shall furnish a qualified field technician on site for installation inspection, start-up, and operator training for up to three (3) consecutive days during one (1) trip to the jobsite. The number of days and trips specified shall be included in the contract price.

END OF SECTION

SJRA
SAN JACINTO RIVER AUTHORITY

Board Communication

Item No.	Agenda Item	Date
7.1	Consider authorizing the General Manager to execute a Professional Services Agreement with Plummer Associates, Inc., for GRP Membrane Replacement and Optimization Phase 2 services for the GRP Division.	**10/22/2026**

BACKGROUND INFORMATION

Firm Name: Plummer Associates, Inc.

Project: GRP Membrane Replacement and Optimization Phase 2

Type of Agreement: Professional Services Agreement
(Contract No. 27-0015)

Project Description/Justification:

SJRA's 30-MGD Surface Water Treatment Plant (SWTP) utilizes microfiltration membranes installed in 2015 that are nearing the end of their useful life. This three-phase project is intended to plan for membrane replacement, as well as identify opportunities to optimize plant performance and determine unutilized capacity, particularly in the pretreatment, membrane, and Granular Activated Carbon (GAC) processes. Phase 1 estimated three to five years of remaining useful membrane life under current operating conditions and developed a stress-testing protocol to assist in further optimization efforts.

This phase of the project, Phase 2, will build upon the findings from Phase 1 and will include unit-process and integrated STWP testing to determine unutilized capacity, assess membrane replacement alternatives and optimization, and develop phased operating strategies. TCEQ coordination to support regulatory compliance is also included. The following Phase 3 is anticipated to include design and implementation of the selected improvements and membrane replacement evaluated from Phase 2.

Key Deliverable(s):	Due Date(s):
Testing Protocols	May 29, 2027
Draft Technical Memorandum	November 15, 2027
Final Technical Memorandum	January 3, 2028

Type of Compensation/Amount: Lump Sum/$966,000.00
Cost Plus Multiplier with Not-to-Exceed/$338,000.00

Total Amount: $1,304,000.00

Cost Type: Engineering

Anticipated Completion Date: April 30, 2028

FUNDING SOURCE: R&R

ATTACHMENTS: Exhibit 1, Map, Professional Services Agreement, Scope, Level of Effort, Schedule, Subconsultant Proposals

RECOMMENDED ACTION

Authorize the General Manager to execute a Professional Services Agreement with Plummer Associates, Inc., in an amount not to exceed $1,304,000.00 for GRP Membrane Replacement and Optimization Phase 2 services for the GRP Division. Sufficient funds were budgeted and are available in Fiscal Year 2027 for this purpose.

EXHIBIT 1

Total Expenditures for GRP Membrane Replacement and Optimization for the GRP Division under GSWMRO

Contract No.	General Manager Approval Date	Amount
PSA 25-0052 Provided for professional services agreement and professional services to estimate GRP membrane module remaining life and identify feasible unutilized capacity.	May 12, 2026	$199,971.00
TOTAL AMOUNT FOR PREVIOUS CONTRACTS		**$199,971.00**

Membrane Replacement and Optimization

0 300 600 Feet

N

SJRA
SAN JACINTO RIVER AUTHORITY

Document Date: 4/2/2026 4:06 PM

Document Location: A:\Requests\GRP\N_Kahn\Process Water Discharge Optimization Study\Process Water Discharge Optimization Study.aprx

SJRA
SAN JACINTO RIVER AUTHORITY

General & Administrative Division
Procurement Department
1577 Dam Site Rd.
Conroe, Texas 77304

PROFESSIONAL SERVICES AGREEMENT

Contract #27-0015

GRP Membrane Replacement & Optimization Phase 2

PROFESSIONAL SERVICES AGREEMENT
CONTRACT NO. 27-0015

This Professional Services Agreement (the "Agreement") is made and entered into by and between the San Jacinto River Authority, a conservation and reclamation district of the State of Texas, ("SJRA") with general and administration offices located at 1577 Dam Site Road, Conroe, Texas 77304,

and

Plummer Associates, Inc., a corporation organized under the laws of the State of Texas, ("CONSULTANT") with principal offices located at 12500 San Pedro, Suite 401, San Antonio, TX 78216.

SJRA and CONSULTANT are sometimes referred to herein collectively as the "Parties" or individually as a "Party."

The Parties hereby agree as follows:

ARTICLE 1 – SCOPE OF SERVICES

1.1 CONSULTANT agrees to perform professional services (the "Services") related to **RFQ 25-0052: GRP Membrane Replacement & Optimization** as are requested from time to time by SJRA. **Exhibit A**, which is attached hereto and incorporated herein by reference, shall be used to define scope of work.

1.2 The Parties agree that nothing in this Agreement shall prohibit the Parties, or either of them, from entering into agreements other than this Agreement for professional services or other work.

ARTICLE 2 – TERM OF AGREEMENT

2.1 The term of this Agreement commences on the Executed Date and continues without interruption through June 30, 2028. If it's determined that additional time is required to complete the services, SJRA Procurement Manager may, but is not obligated to, in their discretion, execute an amendment to grant up to an additional six (6) months of time so long the amount of the consideration does not increase. SJRA may terminate this Agreement for convenience, and either Party may terminate this Agreement for cause, in each case as provided in Article 12.

2.2 Without limiting the generality of the foregoing Paragraph 2.1, Consultant's obligations under Articles 5, 6, 8, 9, 10, 11, 18, 19 and 20 shall survive the expiration or termination of this Agreement.

ARTICLE 3 – COMPENSATION AND PAYMENT

3.1 SJRA agrees to pay CONSULTANT, and CONSULTANT agrees to accept, as full and complete compensation for Services properly performed by CONSULTANT in accordance with this Agreement, the rates and charges agreed upon. **Exhibit B**, which is attached hereto and incorporated herein by reference, shall be used to define compensation.

3.2 On or before the tenth day of each calendar month, CONSULTANT shall submit an invoice to SJRA Accounts Payable at AP@sjra.net, together with backup documentation required by SJRA and releases and waivers in forms acceptable to SJRA, covering all Services performed by CONSULTANT and its subconsultants, subcontractors and suppliers during the preceding calendar month. CONSULTANT shall separately itemize on each invoice: (i) payment sought, (ii) the amount budgeted for each service, (iii) the amount of payment requested pursuant to services, (iv) the amount previously paid pursuant to services, (v) descriptions of services performed during the prior month, and (vi) the total payment requested by such invoice. SJRA shall pay the amount it agrees to be due within forty-five (45) days after receipt of such complete invoice and backup documentation. SJRA shall notify CONSULTANT in writing of a disputed amount in an invoice within twenty-one (21) days of receipt. Such notice shall include a detailed statement of the amount of the invoice which is disputed.

3.3 SJRA shall have the right but not the obligation to withhold, offset, or reduce all or part of any payment requested in any invoice to such extent as may be necessary, but in no event greater than 110% of the disputed amount, on account of:

(a) Services that are not in compliance with this Agreement or any failure of CONSULTANT to perform Services in accordance with the provisions of this Agreement;

(b) third party suits, stop notices, claims or liens arising out of Services performed for which CONSULTANT is responsible pursuant to this Agreement and asserted or filed against SJRA or any of its property or portion thereof or improvements thereon provided that CONSULTANT fails to provide SJRA with sufficient evidence that CONSULTANT's insurance is adequate or shall cover the claim(s);

(c) uninsured damage to any INDEMNITEE (hereinafter defined) which results from CONSULTANT's failure to obtain or maintain the insurance required by this Agreement or from any action or inaction by CONSULTANT or any of its subcontractors, subconsultants, or suppliers which excuses any insurer from liability for any loss or claim which would, but for such action or inaction, be covered by insurance; or

(d) any failure of CONSULTANT to pay any subcontractor, subconsultant, or supplier of CONSULTANT the correct, undisputed, and contractually obligated amount for acceptable services received and for acceptable supplies received. CONSULTANT will not include in its billings to SJRA any amount in a subcontractor or supplier invoice which it has not paid or does not intend to pay within the terms and conditions of the applicable subcontract agreement or supplier purchase order.

Any failure by SJRA to exercise its right to withhold all or any part of payment requested in any invoice as provided in this Paragraph 3.3 shall not be and shall not be construed as (i) a waiver of SJRA's right to do so in the future, or (ii) evidence that any of the circumstances identified in Subparagraphs 3.3(a) through (d) above have not occurred. When the above reasons for withholding payment are remedied or no longer exist, CONSULTANT shall resubmit an invoice for the withheld amounts. Payment will be made within thirty (30) calendar days of receipt by SJRA of an approved invoice, subject to Paragraph 3.4 below.

3.4 CONSULTANT agrees to pay in full (less any applicable retainage) as soon as reasonably practicable, but in no event later than thirty (30) days following payment from SJRA, all subcontractors, subconsultants, and any other persons or entities supplying labor, supplies, materials, or equipment in connection with Services that are owed payment by CONSULTANT out of such payment made to CONSULTANT by SJRA. Further, provided that SJRA has paid CONSULTANT in accordance with the terms of this Agreement, **CONSULTANT SHALL DEFEND AND INDEMNIFY SJRA FROM AND AGAINST ANY CLAIMS FOR PAYMENT ASSERTED OR FILED BY ANY SUCH PERSON OR ENTITY AGAINST SJRA, ITS PROJECT OR PROPERTY OR CONSULTANT.**

3.5 Non-Appropriation: All funds for payment by SJRA under this Agreement are subject to the availability of an annual appropriation for this purpose by SJRA. In the event of non-appropriation of funds by the Board of Directors of SJRA for the services provided under the Agreement, SJRA will terminate the Agreement, without termination charge or other liability, on the last day of the then-current fiscal year or when the appropriation made for the then-current year for the services covered by this Agreement is spent, whichever event occurs first (the "Non-Appropriation Date"). If at any time funds are not appropriated for the continuance of this Agreement, cancellation shall be accepted by the CONSULTANT on thirty (30) days prior written notice, but failure to give such notice shall be of no effect and SJRA shall not be obligated under this Agreement beyond the Non-Appropriation Date.

ARTICLE 4 – STANDARD OF CARE; COORDINATION OF SERVICES; SAFETY; COST ESTIMATES; LEGAL COMPLIANCE; THIRD PARTY REVIEW

4.1 CONSULTANT shall perform, supervise and direct the Services, and otherwise discharge its obligations under this Agreement: (a) with the professional skill and care ordinarily provided by competent engineers practicing under the same or similar circumstances and professional license; and (b) as expeditiously as is prudent considering

the ordinary professional skill and care of a competent engineer (collectively, the CONSULTANT's "Standard of Care").

4.2 Consistent with its Standard of Care, CONSULTANT shall (a) perform its Services in accordance with all applicable laws, codes, ordinances and regulations; (b) perform its Services in an efficient manner; and (c) keep SJRA apprised of the status of Services, coordinate its activities with SJRA, and accommodate other activities of SJRA at sites that the Services impact. CONSULTANT shall designate an authorized representative to be available for consultation, assistance, and coordination of activities.

4.3 To the extent the Scope of Work under this agreement includes or involves construction activities, the following provisions shall apply: As between SJRA and CONSULTANT, the CONSULTANT shall be solely responsible for its own activities at sites including the safety of its employees, and that of its subconsultants, subcontractors and suppliers. Construction contractors of SJRA shall have sole responsibility for providing materials, means, and methods of construction, for controlling their individual work areas and safety of said areas for all persons, and for taking all appropriate steps to ensure the quality of their work and the safety of their employees and of the public in connection with their performance of work or services provided under contracts with SJRA. Without assuming any control over, responsibility for or liability whatsoever with respect to the construction contractor obligations of the foregoing sentence, CONSULTANT shall notify SJRA if it observes violations of safety regulations or ordinances or quality of work deficiencies by SJRA's construction contractors. CONSULTANT shall comply with the site safety program and rules established by the construction contractors.

4.4 To the extent the Scope of Work under this agreement includes or involves construction activities, the following provisions shall apply: To the extent that CONSULTANT provides to SJRA any estimate of costs associated with construction, any such estimate shall be developed in accordance with CONSULTANT's Standard of Care, but it is recognized by the Parties that neither CONSULTANT nor SJRA has control over the cost of the labor, materials, or equipment, over a construction contractor's methods of determining bid prices, or over competitive bidding, market, or negotiating conditions. Accordingly, CONSULTANT cannot and does not warrant or represent that bids or negotiated prices will not vary from SJRA's budget for the project or from any estimate of the cost of work or evaluation prepared or agreed to by CONSULTANT.

4.5 CONSULTANT hereby agrees that the following terms, conditions, verifications, certifications, and representations apply to and are incorporated into this Agreement for all purposes, and CONSULTANT shall deliver to SJRA signed and notarized verifications prior to commencement of any Services:

(a) With respect to providing Services hereunder, CONSULTANT shall comply with any applicable Equal Employment Opportunity and/or Affirmative Action ordinances, rules, or regulations during the term of this Agreement.

(b) Pursuant to Texas Local Government Code Chapter 176, CONSULTANT shall submit a signed Texas Ethics Commission ("TEC") Conflict of Interest Questionnaire ("CIQ") at the time CONSULTANT submits this signed Agreement to SJRA. TEC Form CIQ and information related to same may be obtained from TEC website by visiting https://www.ethics.state.tx.us/ forms/conflict/. If CONSULTANT certifies that there are no Conflicts of Interest, CONSULTANT shall indicate so by writing name of CONSULTANT's firm and "No Conflicts" on the TEC Form CIQ.

(c) If CONSULTANT is a privately held entity, then pursuant to Texas Government Code Section 2252.908 and the rules promulgated thereunder by the TEC, CONSULTANT shall submit a completed and signed TEC Form 1295 with a certificate number assigned by the TEC to SJRA at the time CONSULTANT submits this signed Agreement to SJRA. TEC Form 1295 and information related to same may be obtained from TEC website by visiting https://www.ethics.state.tx.us/filinginfo/1295/. CONSULTANT agrees and acknowledges that this Agreement shall be of no force and effect unless and until CONSULTANT has submitted said form to SJRA, if and to the extent such form is required under Government Code § 2252.908 and the rules promulgated thereunder by the TEC.

(d) As required by Chapter 2271, Texas Government Code, CONSULTANT hereby verifies that CONSULTANT, including a wholly owned subsidiary, majority-owned subsidiary, parent company or affiliate of the same, does not boycott Israel and will not boycott Israel through the term of this Agreement. The term "boycott Israel" in this Paragraph has the meaning assigned by Section 2271.001, Texas Government Code, which incorporates the definition provided in Section 808.001, Texas Government Code, as amended.

(e) Pursuant to Chapter 2252, Texas Government Code, CONSULTANT represents and certifies that, at the time of execution of this Agreement, neither CONSULTANT, nor any wholly owned subsidiary, majority-owned subsidiary, parent company or affiliate of the same, is engaged in business with Iran, Sudan, or any terrorist organization, and is a company listed by the Texas Comptroller of Public Accounts under Sections 2270.0201 or 2252.153 of the Texas Government Code.

(f) As required by Chapter 2276, Texas Government Code (as added by Senate Bill 13, 87th Texas Legislature, Regular Session), as amended, CONSULTANT hereby verifies that CONSULTANT, including any wholly owned subsidiary, majority-owned subsidiary, parent company or affiliate of the same, does not boycott energy companies, and will not boycott energy companies during the term of this Agreement. The term "boycott energy companies" in this Paragraph shall have the meaning assigned to the term "boycott energy company" in Section 809.001, Texas Government Code, as amended.

(g) As required by Section 2274.002, Texas Government Code (as added by Senate Bill 19, 87th Texas Legislature, Regular Session, "SB 19"), as amended, CONSULTANT hereby verifies that CONSULTANT, including any wholly owned subsidiary, majority-owned subsidiary, parent company or affiliate of the same, (i) does not have a practice, policy, guidance or directive that discriminates against a firearm entity or firearm trade association, and (ii) will not discriminate against a firearm entity or firearm trade association during the term of this Agreement. The term "discriminate against a firearm entity or trade association" in this Paragraph shall have the meaning assigned to such term in Section 2274.001(3), Texas Government Code (as added by SB 19), as amended.

(h) Pursuant to Chapter 2274 of the Texas Government Code (as added by Senate Bill 2116, 87th Legislature, Regular Session), as amended, and to the extent this Agreement grants to CONSULTANT direct or remote access to the control of critical infrastructure, excluding access specifically allowed for product warranty and support, CONSULTANT verifies that neither CONSULTANT, including any wholly owned subsidiary, majority-owned subsidiary, parent company, or affiliate of the same, nor any of its sub-contractors are: (i) owned or controlled by (a) individuals who are citizens of China, Iran, North Korea, Russia, or a designated country; or (b) a company or other entity, including a governmental entity, that is owned or controlled by citizens of or is directly controlled by the government of China, Iran, North Korea, Russia, or a designated country; or (ii) headquartered in China, Iran, North Korea, Russia or a designated country. The term "designated country" in this Paragraph means a country designated by the Governor as a threat to critical infrastructure under Section 2274.0103, Texas Government Code. The term "critical infrastructure" in this Paragraph shall have the meaning assigned to such term in Section 2274.0101, Texas Government Code.

4.6 CONSULTANT acknowledges and agrees that projects of SJRA may be subject to review and approval by other third parties. Accordingly, as and when requested by SJRA, CONSULTANT shall submit such information and cooperate with the other third parties to the extent necessary to undergo any such review or obtain any such approval.

4.7 CONSULTANT does not represent Work Product (as defined herein) to be suitable for reuse on any other project or for any other purpose(s). If SJRA reuses any Work Product without CONSULTANT's specific written verification or adaptation, such reuse will be at the risk of SJRA, without liability to CONSULTANT.

ARTICLE 5 – COST RECORDS

5.1 CONSULTANT shall maintain records and books in accordance with generally accepted accounting principles and practices. For Services provided by CONSULTANT under cost reimbursable, time and material or unit pricing, during the period of this

Agreement and for five (5) years thereafter, CONSULTANT shall maintain records of direct costs for which SJRA is charged. SJRA shall at all reasonable times have access to such records for the purpose of inspecting, auditing, verifying, or copying the same, or making extracts therefrom. SJRA's audit rights for fixed unit rate or time and materials agreements shall extend to review of records for the purpose of substantiating man-hours worked, units employed, and third-party charges only. Except to the extent audit rights are granted to SJRA by applicable law, SJRA shall have no audit rights with respect to the portion Services compensated on a lump sum basis.

ARTICLE 6 – OWNERSHIP OF WORK PRODUCT AND TECHNOLOGY

6.1 All studies, plans, reports, drawings, specifications, cost estimates, software, computations, and other information and documents prepared by CONSULTANT, its subconsultants, subcontractors, and/or suppliers, in connection with Services or any project of SJRA are and shall remain SJRA's property upon creation (collectively, "Work Product"); provided, however, that Work Product shall not include pre-existing proprietary information of CONSULTANT, its subconsultants, subcontractors, and/or suppliers ("CONSULTANT Proprietary Information"). To this end, CONSULTANT agrees to and does hereby assign, grant, transfer, and convey to SJRA, its successors and assigns, CONSULTANT's entire right, title, interest and ownership in and to such Work Product, including, without limitation, the right to secure copyright registration. CONSULTANT confirms that SJRA and its successors and assigns shall own CONSULTANT's right, title and interest in and to, including without limitation the right to use, reproduce, distribute (whether by sale, rental, lease or lending, or by other transfer of ownership), to perform publicly, and to display, all such Work Product, whether or not such Work Product constitutes a "work made for hire" as defined in 17 U.S.C. Section 201(b). In addition, CONSULTANT hereby grants SJRA a fully paid-up, royalty free, perpetual, assignable, non-exclusive license to use, copy, modify, create derivative works from and distribute to third parties CONSULTANT Proprietary Information in connection with SJRA's exercise of its rights in the Work Product, operation, maintenance, repair, renovation, expansion, replacement, and modification of projects of SJRA or otherwise in connection with property or projects in which SJRA has an interest (whether by SJRA or a third party). CONSULTANT shall obtain other assignments, confirmations, and licenses substantially similar to the provisions of this Paragraph from all of its subconsultants, subcontractors, and suppliers. Work Product is to be used by CONSULTANT only with respect to the project in connection with which such Work Product was created and is not to be used on any other project. CONSULTANT and its subconsultants, subcontractors, and suppliers are granted a limited, nonexclusive, non-transferable, revocable license during the term of their respective agreements under which each is obligated to perform Services to use and reproduce applicable portions of the Work Product appropriate to and for use in the execution of Services. Submission or distribution to comply with official regulatory requirements for other purposes in connection with Services is not to be construed as publication in derogation of SJRA's copyright or other reserved rights. CONSULTANT agrees that all Work Product will be maintained according to the provisions of the Public Information Act, Chapter 552, Texas Government Code, and the

Local Government Records Act, Chapters 201 through 205, Texas Local Government Code, each as amended. CONSULTANT shall deliver all copies of the Work Product to SJRA upon the earliest to occur of (i) SJRA's request, (ii) completion of Services in connection with which Work Product was created, or (iii) termination of this Agreement. CONSULTANT is entitled to retain copies of Work Product for its permanent project records.

6.2 CONSULTANT agrees that all information provided by SJRA in connection with Services shall be considered and kept confidential ("Confidential Information"), and shall not be reproduced, transmitted, used, or disclosed by CONSULTANT without the prior written consent of SJRA, except as may be necessary for CONSULTANT to fulfill its obligations hereunder; provided, however, that such obligation to keep confidential such Confidential Information shall not apply to any information, or portion thereof, that:

(a) was at the time of receipt by CONSULTANT otherwise known by CONSULTANT by proper means;

(b) has been published or is otherwise within the public domain, or is generally known to the public at the time of its disclosure to CONSULTANT;

(c) subsequently is developed independently by CONSULTANT, by a person having nothing to do with the performance of this Agreement and who did not learn about any such information as a result of CONSULTANT's being a Party to this Agreement;

(d) becomes known or available to CONSULTANT from a source other than SJRA and without breach of this Agreement by CONSULTANT or any other impropriety of CONSULTANT;

(e) enters the public domain without breach of the Agreement by or other impropriety of CONSULTANT;

(f) becomes available to CONSULTANT by inspection or analysis of products available in the market;

(g) is disclosed with the prior written approval of SJRA;

(h) was exchanged between SJRA and CONSULTANT and ten (10) years have subsequently elapsed since such exchange; or

(i) is disclosed to comply with the Texas Public Information Act or in response to a court order to comply with the requirement of a government agency.

6.3 CONSULTANT shall not be liable for the inadvertent or accidental disclosure of Confidential Information, if such disclosure occurs despite the exercise of at least the same

degree of care as CONSULTANT normally takes to preserve and safeguard its own proprietary or confidential information.

6.4 CONSULTANT will advise SJRA of any patents or proprietary rights and any royalties, licenses, or other charges which CONSULTANT knows or should know in the exercise of its Standard of Care impacts any design provided by CONSULTANT in connection with any Services, and obtain SJRA's prior written approval before proceeding with such Services. CONSULTANT shall not perform patent searches or evaluation of claims, but will assist SJRA in this regard if requested, pursuant to a written change order in accordance with Paragraph 12.1, below. There will be no charge for CONSULTANT's existing patents.

ARTICLE 7 – INDEPENDENT CONTRACTOR RELATIONSHIP

7.1 In the performance of Services hereunder, CONSULTANT shall be an independent contractor with the authority to control and direct the performance of the details of Services and its own means and methods. CONSULTANT shall not be considered a partner, affiliate, agent, or employee of SJRA and shall in no way have any authority to bind SJRA to any obligation.

ARTICLE 8 – WARRANTY PERIOD; GUARANTEES

8.1 If within a period of one (1) year following completion of Services, it is discovered that such Services were not performed in accordance with CONSULTANT's Standard of Care or the Contract Documents, SJRA, in its sole discretion, may: (1) direct CONSULTANT to re-perform and CONSULTANT shall re-perform such Services at its own expense, and as expediently or in the manner required for SJRA's needs; or (2) retain such other consultant or consultants as necessary to perform such corrective services, and CONSULTANT agrees to pay SJRA's costs associated with having such other consultant or consultants perform such corrective services, and any other damages incurred by SJRA as a result of such default. The obligations of CONSULTANT under this Paragraph 8.1 are in addition to other rights and remedies of SJRA available to it pursuant to this Agreement or applicable law.

8.2 CONSULTANT agrees to assign SJRA the warranty or guarantee of any subconsultant, subcontractor, supplier or manufacturer of items of services, supplies, machinery, equipment, materials, or products provided by CONSULTANT hereunder and cooperate and assist SJRA in SJRA's enforcement thereof. CONSULTANT's responsibility with respect thereto is limited to such assignment, cooperation, and assistance.

ARTICLE 9 – INDEMNIFICATION

9.1 TO THE FULLEST EXTENT PERMITTED BY LAW, CONSULTANT SHALL INDEMNIFY AND HOLD HARMLESS SJRA AND ITS BOARD, DIRECTORS, OFFICERS, AGENTS, REPRESENTATIVES AND EMPLOYEES (EACH AN "INDEMNITEE" AND COLLECTIVELY,

THE "INDEMNITEES"), FROM AND AGAINST CLAIMS, LOSSES, DAMAGES, DEMANDS, SUITS, CAUSES OF ACTION, SETTLEMENTS, LIABILITIES, COSTS, FINES, JUDGMENTS AND EXPENSES (INCLUDING, WITHOUT LIMITATION, REASONABLE AND NECESSARY COURT COSTS, EXPERTS' FEES, ATTORNEYS' FEES AND TO THE EXTENT ALLOWED BY LAW, EXPERTS' FEES) (COLLECTIVELY, "LOSSES"), INCLUDING WITHOUT LIMITATION THOSE BROUGHT AGAINST OR INCURRED OR SUFFERED BY ANY ONE OR MORE OF THE INDEMNITEES AND THOSE ARISING IN FAVOR OF OR BROUGHT BY ANY THIRD PARTY, TO THE EXTENT CAUSED BY OR RESULTING FROM AN ACT OF NEGLIGENCE, INTENTIONAL TORT, INTELLECTUAL PROPERTY INFRINGEMENT, OR FAILURE TO PAY A SUBCONTRACTOR OR SUPPLIER, COMMITTED BY CONSULTANT, ITS AGENT, ITS CONSULTANT UNDER CONTRACT, OR ANOTHER ENTITY OVER WHICH CONSULTANT EXERCISES CONTROL, UNDER OR IN CONNECTION WITH THIS AGREEMENT, EVEN IF SUCH LOSSES ARE CAUSED IN PART BY THE NEGLIGENCE OR FAULT, BREACH OR VIOLATION OF A STATUTE, ORDINANCE, GOVERNMENTAL REGULATION, STANDARD OR RULE OR BREACH OF CONTRACT OF AN INDEMNITEE OR ANY THIRD PARTY UNDER THE CONTROL OR SUPERVISION OF AN INDEMNITEE; PROVIDED, HOWEVER, THAT CONSULTANT'S OBLIGATION TO INDEMNIFY AND HOLD HARMLESS SHALL NOT EXTEND TO THE PORTION (IF ANY) OF SUCH LOSSES THAT ARE CAUSED BY THE NEGLIGENCE OR FAULT, BREACH OR VIOLATION OF A STATUTE, ORDINANCE, GOVERNMENTAL REGULATION, STANDARD OR RULE OR BREACH OF CONTRACT OF AN INDEMNITEE OR ANY THIRD PARTY UNDER THE CONTROL OR SUPERVISION OF AN INDEMNITEE OTHER THAN CONSULTANT OR ITS AGENT OR EMPLOYEE OR SUBCONTRACTORS OF ANY TIER.

9.2 TO THE FULLEST EXTENT PERMITTED BY LAW, AND TO THE EXTENT A DEFENSE IS NOT PROVIDED FOR THE INDEMNITEES UNDER AN INSURANCE POLICY AS REQUIRED UNDER PARAGRAPH 1(F) OF EXHIBIT C (ADDITIONAL INSURED REQUIREMENT),ATTACHED HERETO AND INCORPORATED HEREIN BY REFERENCE, OR THE INDEMNITEES' ATTORNEYS' FEES ARE NOT OTHERWISE RECOVERED UNDER THE INDEMNITY PROVISION SET FORTH IN PARAGRAPH 9.1 HEREOF, CONSULTANT SHALL, UPON FINAL ADJUDICATION OF THE LOSSES AS DEFINED IN PARAGRAPH 9.1 HEREOF AND WITHIN THIRTY (30) DAYS FOLLOWING THE DATE OF A WRITTEN DEMAND, REIMBURSE THE INDEMNITEES FOR ALL REASONABLE ATTORNEYS' FEES INCURRED TO DEFEND AGAINST THE LOSSES IN PROPORTION TO CONSULTANT'S LIABILITY TO ANY THIRD PARTY FOR SUCH LOSSES.

ARTICLE 10 – LIMITATION OF LIABILITY

10.1 NEITHER PARTY HERETO SHALL BE LIABLE TO THE OTHER PARTY OR ITS AFFILIATES FOR ANY LOSS OF PROFIT, LOSS OF REVENUE, LOSS OF USE OR ANY OTHER INDIRECT, CONSEQUENTIAL OR SPECIAL DAMAGES (EXCLUDING FINES AND PENALTIES LEVIED BY A REGULATORY AGENCY), EVEN IF CAUSED BY THE SOLE OR CONCURRENT NEGLIGENCE OF A PARTY, WHETHER ACTIVE OR PASSIVE, AND EVEN IF ADVISED OF THE POSSIBILITY THEREOF.

10.2 NOTHING HEREIN SHALL BE CONSTRUED AS CREATING ANY PERSONAL LIABILITY ON THE PART OF ANY BOARD MEMBER, OFFICER, EMPLOYEE, OR AGENT OF SJRA.

ARTICLE 11 – INSURANCE

11.1 CONSULTANT shall obtain and maintain insurance as provided in **Exhibit C**, attached hereto and incorporated herein.

ARTICLE 12 – CHANGES; TERMINATION FOR CONVENIENCE; TERMINATION FOR CAUSE

12.1 SJRA may, at any time and from time to time, make written changes in the form of amendments, modifications, additions, or omissions. In the event that any such change, through no fault of CONSULTANT, shall impact CONSULTANT's compensation or schedule, then (a) such changes shall be authorized by written change order issued by SJRA and accepted by CONSULTANT, and (b) an equitable adjustment shall be made to the agreement in writing duly executed by both Parties, to reflect the change in compensation and schedule.

12.2 SJRA may for convenience terminate this Agreement, or CONSULTANT's right to perform Services under this Agreement at any time giving thirty (30) days written notice of such termination. In such event, SJRA shall have the right but not the obligation to assume all obligations and commitments that CONSULTANT may have in good faith undertaken or incurred in connection with the Services terminated, and SJRA shall pay CONSULTANT, as its sole and exclusive remedy, for Services properly performed to date of termination and for reasonable costs of closing out such Services provided SJRA has pre-approved such costs. CONSULTANT shall not be entitled to lost profit on unperformed Services or any consequential damages of any kind. Upon termination, CONSULTANT shall invoice SJRA for all Services performed by CONSULTANT prior to the date of termination which have not previously been compensated. Payment of undisputed amounts in the final invoice shall be due and payable within thirty (30) days after receipt by SJRA of such invoice and all Work Product.

12.3 This Agreement may be terminated by either Party in the event that the other Party fails to perform in accordance with its requirements and such Party does not cure such failure within ten (10) days after receipt of written notice describing such failure. In the event that SJRA terminates this Agreement for cause, CONSULTANT shall not be entitled to any compensation until final completion of the then ongoing Services and any such entitlement shall be subject to SJRA's right to offset and/or recoup all damages and costs associated with finally completing such Services. If for any reason, CONSULTANT is declared in default and/or terminated by SJRA, SJRA shall have the right, subject to Paragraph 3.3, to offset and apply any amounts which might be owed to SJRA by CONSULTANT against any earned but unpaid amounts owed to CONSULTANT by SJRA.

ARTICLE 13 – FORCE MAJEURE

13.1 Any delay in performance or non-performance of any obligation other than an obligation to make a payment as required under this Agreement, of CONSULTANT contained herein shall be excused to the extent such delay in performance or non-performance is caused by Force Majeure. "Force Majeure" shall mean fire, flood, act of God, earthquakes, extreme weather conditions, epidemic, pandemic, war, riot, civil disturbance or unrest, imposition of martial law, restrictions imposed by civil authority, loss of control of civil authority, illegal activity, extreme unreliability or failure of the utility infrastructure, failure of the US banking system, loss of access to communication systems, sabotage, terrorism, or judicial restraint, but only to the extent that such event (i) is beyond the reasonable control of and cannot be reasonably anticipated by or the effects cannot be reasonably alleviated by CONSULTANT and (ii) prevents the performance of Services.

13.2 If CONSULTANT is affected by Force Majeure, CONSULTANT shall promptly provide written notice to SJRA, explaining in detail the full particulars and the expected duration thereof. Notice will be considered prompt if delivered within five (5) days after CONSULTANT first becomes aware or should have become aware through performance in accordance with the standard of care, that the event of Force Majeure will affect the performance of Services. CONSULTANT shall use its commercially reasonable efforts to mitigate interruption or delay if it is reasonably capable of being mitigated.

ARTICLE 14 – SUCCESSORS, ASSIGNMENT AND SUBCONTRACTING

14.1 SJRA and CONSULTANT bind themselves and their successors, executors, administrators and permitted assigns to the other Party of this Agreement and to the successors, executors, administrators and permitted assigns of such other party, in respect to all covenants of this Agreement.

14.2 No right or interest in this Agreement shall be assigned by CONSULTANT or SJRA without the prior written consent of the other Party.

14.3 Prior to commencement of any part of the Services to be provided with respect to which CONSULTANT has elected to subcontract, CONSULTANT will notify SJRA in writing of the identity of the particular subcontractor, subconsultant or supplier CONSULTANT intends to employ for the performance of such part of the Services and the scope of Services it will perform. SJRA shall have the right within twenty-one (21) calendar days of such written notice to disallow CONSULTANT's employment of any particular subcontractor, subconsultant or supplier, provided that any reasonable additional costs incurred by CONSULTANT as a result of such disallowance shall be borne by SJRA. All damage, injury or loss to any property caused, directly or indirectly, in whole or in part, by CONSULTANT or any subcontractor, supplier or any person or organization directly or indirectly employed by any of them to perform or furnish any of the Services or anyone for whose acts any of them may be liable, shall be remedied by CONSULTANT (except to the extent of damage or loss attributable to errors or omissions in the drawings or specifications (unless CONSULTANT had knowledge of the error or omission or using reasonable care should have known of the error and CONSULTANT failed to report same), or to the acts or omissions of SJRA or anyone employed by SJRA, or anyone for whose acts any of them may be liable other than CONSULTANT or its agent, or employee, or subcontractors of any tier).

ARTICLE 15 – SEVERABILITY; NON-WAIVER

15.1 If any provision or portion thereof of this Agreement is deemed unenforceable or void, then such provision or portion thereof shall be deemed severed from the Agreement and the balance of the Agreement shall remain in full force and effect.

15.2 Failure by SJRA in any instance to insist upon observance or performance by CONSULTANT of any term, condition or obligation of this Agreement shall not be deemed a waiver by SJRA of any such observance or performance. No waiver by SJRA of any term, condition, obligation or breach of this Agreement will be binding upon SJRA unless in writing, and then will be for the particular instance specified in such writing only. Payment of any sum by SJRA to CONSULTANT with knowledge of any breach will not be deemed a waiver of such breach or any other breach.

ARTICLE 16 – LICENSE REQUIREMENTS

16.1 The CONSULTANT and any subconsultant shall have and maintain any licenses, registrations and certifications required by the State of Texas or recognized professional organizations governing the Services performed under this Agreement.

ARTICLE 17 – ENTIRE AGREEMENT

17.1 This Agreement contains the full and complete understanding of the Parties pertaining to their subject matter and supersede any and all prior and contemporaneous representations, negotiations, agreements or understandings between the Parties, whether written or oral. The Agreement may be modified only in writing, signed by both Parties.

ARTICLE 18 – GOVERNING LAW; VENUE

18.1 This Agreement, and its and their construction and any disputes arising out of, connected with, or relating to this Agreement shall be governed by the laws of the State of Texas, without regard to its conflicts of law principles. Venue of all dispute resolution proceedings arising out of, connected with or relating to this Agreement, shall be in Montgomery County, Texas.

ARTICLE 19 – DISPUTE RESOLUTION

19.1 In the event of any dispute arising out of or relating to this Agreement, any services which SJRA and CONSULTANT have been unable to resolve within thirty (30) days after such dispute arises, a senior representative of CONSULTANT shall meet with the General Manager of SJRA at a mutually agreed upon time and place not later than forty-five (45) days after such dispute arises to attempt to resolve such dispute. In the event such representatives are unable to resolve any such dispute within fifteen (15) days after such meeting, either Party may, by written notice to the other, submit such dispute to non-binding mediation before a mutually agreeable mediator. If the Parties are unable to agree upon a mediator within twenty (20) days after such written notice of submission to mediation, the American Arbitration Association shall be empowered to appoint a qualified mediator pursuant to the American Arbitration Association Construction Industry Mediation Rules. If the dispute is technical in nature, the mediator appointed by the American Arbitration Association shall be qualified by at least ten (10) years' experience in construction, engineering, and/or public works operations. The mediation shall be conducted within thirty (30) days of the selection or appointment of the mediator, as applicable. The mediation shall be held at a mutually agreeable location in Montgomery County, Texas. If the Parties are unable to agree on a location, the mediation shall be held at the offices of the American Arbitration Association closest to Conroe, Texas.

19.2 Any dispute arising out of or relating to this Agreement or any Services not resolved pursuant to Paragraph 19.1, shall be resolved, by litigation in a court of competent jurisdiction.

19.3 Notwithstanding the foregoing, in the event SJRA and any other consultant and/or any contractor are involved in a dispute in connection with a project for which CONSULTANT has provided Services, and SJRA, in its sole discretion, determines that CONSULTANT's participation in any dispute resolution meeting or mediation proceeding between SJRA and any such consultant and/or contractor is necessary to the resolution of such dispute, CONSULTANT agrees to attend and participate at its own cost in any such dispute resolution meeting or mediation proceeding.

19.4 If CONSULTANT brings any claim against SJRA and CONSULTANT does not prevail with respect to such claim, CONSULTANT shall be liable for all attorneys' fees and costs incurred by SJRA as a result of such claim.

ARTICLE 20 – ELECTRONIC SIGNATURES; COUNTERPARTS

20.1 This Agreement may be executed in counterparts, each of which shall be deemed an original, but all of which together shall be deemed to be one and the same agreement. A signed copy of this Agreement delivered by facsimile, email, or other means of electronic transmission shall be deemed to have the same legal effect as delivery of an original signed copy of this Agreement. Duplicate copies of duly executed and delivered counterparts of this Agreement shall be deemed to have the same full force and effect as originals and may be relied upon as such. Notwithstanding the foregoing, the Parties agree that this Agreement may be executed using electronic signatures at the option and in the discretion of SJRA, and, in such event, the provisions of the Uniform Electronic Transaction Act, Chapter 332, Texas Business and Commerce Code, as amended, and any applicable policies and procedures of SJRA regarding electronic signatures shall apply.

ARTICLE 21 – CONFIDENTIALITY

21.1 Neither CONSULTANT nor any of its subconsultants shall publish or release any publicity or public relations materials of any kind concerning or relating to this Agreement, the Services or the activities of SJRA, unless such materials have first been reviewed and approved in writing by SJRA. This provision shall not apply to mandatory reports which CONSULTANT or its subconsultants are required by law to file with governmental authorities.

EXECUTED this _____ day of _____, 20____.

SAN JACINTO RIVER AUTHORITY:

_____

Aubrey A. Spear, P.E., General Manager

APPROVED AS TO CONTENT:

_____

Connie Curtis, P.E., Director of Technical and Operational Services

APPROVED AS TO FORM:

_____
Amy L. Sims, General Counsel

Plummer Associates, Inc.:

_____
Mary Portillo, Principal, 9/29/2026
Name, Title, Date

EXHIBIT A

SCOPE OF SERVICES AND SCHEDULE

General

This agreement is to provide the following scope of work for Phase 2 of the Membrane Replacement and Optimization (MRO) project. This is a three-phase project intended to evaluate and identify potential unutilized capacity within San Jacinto River Authority's (SJRA's) 30MGD Surface Water Treatment Plant (SWTP). The primary purpose of Phase 2 is to test the individual unit processes of the plant, along with limited SWTP-level testing to determine the unutilized capacity as the membrane replacements occur at end of their useful life.

Phase 2 includes project management, Texas Commission on Environmental Quality (TCEQ) coordination, sampling plan and data requests, protocol finalization and workshops, unit-process and integrated SWTP testing, re-rating alternatives and OPCCs, Contact Time (CT) evaluation, and a Technical Memorandum (TM). The work consists of Tasks 1201 through 1211. Tasks 1212 and 1213 are Cost Plus tasks for Additional Testing and Evaluation as needed and a CT Study submittal to TCEQ if needed.

Task 1201 – Project Management

GSWMRO.1201.0020

1. Conduct one (1) phase initiation meeting (**Workshop No. 1**) with SJRA Project Team and other interested parties to discuss Project expectations, communication, reporting, schedule, deliverables and to confirm Project goals. The project initiation meeting will include not only administrative and management topics, but also a discussion of the evaluation approach. The CONSULTANT shall prepare a full meeting agenda/presentation. CONSULTANT shall prepare and distribute meeting minutes and action items to attendees. This meeting will be in person at SJRA's offices. Specific topics to be addressed in the project initiation meeting include but are not limited to:
    a. Confirming project stakeholders, including regional and state TCEQ regulators.
    b. Confirming the project scope, deliverables, and schedule.
    c. Confirming project reporting requirements.
    d. Confirming the Owner's (SJRA) project expectations and level of quality.
    e. Discussing potential risks and mitigation measures.
2. Project coordination, management, and communication shall include, but is not limited to, the following items:
    a. Review and incorporate the policies, procedures, and practices of SJRA.
    b. Comply with contractual terms and conditions including adherence to budget, schedule, scope, and quality.
    c. Plan for and assign appropriately qualified and experienced personnel to projects in a timely manner and coordinate their efforts of such personnel to maintain budget, schedule, scope,

and quality compliance. Provide the equipment and material resources required for proper project execution.

d. Prepare, provide, and maintain an electronic Project schedule using Microsoft Project® for SJRA Project Team approval. Update schedule each month. Schedule shall include critical activity start and/or completion dates as milestones, including monthly progress meetings, design review dates, completion of engineering design studies, and all SJRA Project deliverable due dates, as a minimum. Provide electronic schedule data in format required to support Project's Master Schedule. Schedule will include estimated review time for SJRA and any other applicable third parties for all deliverables.

e. Prepare and submit monthly progress/status reports to support monthly billings. Monthly progress/status reports shall include a summary description of tasks completed as of status report date, description of activities planned for next 30 days, financial status of project, status of schedule for project, identification of any technical or other issues which may have an impact to the overall project budget and/or schedule.

f. Manage, administer, and coordinate the Work of all sub-consultants (team members). Review and become familiar with all reports, documents, studies, and other information obtained and developed by the Project's sub-consultants and incorporate into the Work. Identify potential impacts to the Work, develop alternatives to eliminate, minimize and/or mitigate those impacts and present those alternatives to SJRA Project Team for consideration. Incorporate the alternative selected by SJRA Project Team into the Work.

g. Facilitate document control and document sharing by utilizing the Project Procore® site for distribution and electronic filing of all Project documents.

h. Conduct monthly progress meetings between SJRA and CONSULTANT PMs during Phase 2 through remote video conferencing. Objective is to review progress, ask questions and review status of actions and/or requests made over the previous month.

i. Schedule and conduct review meetings with stakeholder agencies (TCEQ) to support agency approval and permitting.

j. Invoicing: Submit invoices monthly by the 10th day of the month following the month being invoiced for. Invoices shall include a record of Consultant and/or Consultant's Subconsultant/Subcontractor activities and deliverables completed within the month, and note activities planned for the next month. Invoices shall be submitted to ap@sjra.net. Coordinate with SJRA Project Manager to determine appropriate format and content for invoice submittals

3. CONSULTANT shall notify assigned SJRA Project Manager in writing that CONSULTANT has expended eighty percent (80%) of the currently approved SJRA Professional Services Agreement and/or Work Order amount within seven (7) calendar days of CONSULTANT reaching this expenditure milestone (80% expenditure milestone). Written notification shall be provided regardless of compensation type (i.e., lump sum, cost-plus multiplier, time-and-materials, etc.). Written notification shall include a statement by CONSULTANT indicating whether remaining amount is adequate to complete current SJRA approved Professional Services Agreement and/or Work Order Scope of Work.

Deliverables:	*Due Dates:*
1. *Initiation Meeting Agenda*	*14 Calendar days after NTP*
2. *Initiation Meeting Minutes*	*3 Calendar days after Meeting*
3. *Baseline Project Schedule*	*14 Calendar days after NTP*
4. *Monthly Progress Reports*	*With invoice submittal*
5. *80% of Contract Budget Notification 80%*	*within 7 Calendar days of reaching*
Workshops:	
1. *Workshop No. 1 – Project Initiation*	*Week of Nov 9th, 2026*

Task 1202 – TCEQ Coordination

GSWMRO.1202.0020

1. Pre-Testing Coordination: The objective of the pre-testing coordination meeting is to review Phase 2 testing and confirm regulatory approval requirements. The CONSULTANT will prepare and facilitate a pre-testing meeting with TCEQ to review Phase 2 testing activities, partial-flow and blending, pretreatment chemistry testing, Granular Activated Carbon (GAC) testing, notification of proposed changes to chemical addition operations and regulatory approval requirements. It will also include a review and discussion on the Surface Water Monthly Operating Report requirements.
2. Interim Coordination: The objective of the interim coordination meeting is to review available testing results and obtain TCEQ direction on subsequent testing activities. These include: unit-process testing results, enhanced coagulation bench testing results, GAC testing results and higher-rate GAC testing evaluation, including: Filter loading rates, effective EBCT, contactor redundancy, Total Organic Carbon (TOC) removal performance, proposed test conditions, and identify requests for additional testing or information from TCEQ.
3. Final Phase 2 Coordination: The objective of the final Phase 2 coordination meeting is to present Phase 2 findings and establish the regulatory pathway for implementation during Phase 3. These include demonstrated unit-process capacities, SWTP re-rating basis, Contact Time (CT) alternatives (prepared under Task 1210), recommended regulatory pathway for SWTP re-rating, anticipated Phase 3 regulatory submittals, summary of Phase 2 testing conclusions.
4. Regulatory Documentation: CONSULTANT will document TCEQ Phase 2 coordination and Phase 3 Regulatory Submittal and Approval Requirements in meeting notes and the Stress Testing Technical Memorandum (TM2).

Deliverables:	*Due Dates:*
1. *Pre-testing Meeting Materials and Notes*	*Jan 2027*
2. *Interim Coordination Meeting Materials and Notes*	*Mar 2027*
3. *Final Coordintion Meeting Materials and Notes*	*Aug 2027*
4. *Regulatory Summary in TM2*	*Nov 2028*

Task 1203 – Sampling Plan and Data Requests

GSWMRO.1203.0020

1. Sample Process Flow Diagram: CONSULTANT will review the existing process flow diagram and prepare a sampling process flow diagram identifying sampling locations, routine analytes, existing online analyzers/meters, and any additional sample collection required to support the Water Quality Sampling and Monitoring Plan.
2. Water Quality Sampling and Monitoring Plan:
    a. CONSULTANT will prepare Draft and Final Water Quality Sampling and Monitoring Plans and establish sampling locations, parameters, frequencies, analytical methods, field measurements, and required analytes.
    b. CONSULTANT will identify analyses, evaluate supplemental instrumentation, including UV254 monitoring; and coordinate testing requirements.
    c. CONSULTANT will compile, review, validate, and organize field and laboratory data and prepare electronic data files for use in project evaluations and reporting.
3. Workshop No. 2 – Water Quality Sampling and Monitoring Plan (Virtual). CONSULTANT will review the sampling process flow diagram and the Draft Water Quality Sampling and Monitoring Plan with SJRA. CONSULTANT will confirm sampling locations, parameters, frequencies, analytical methods, field measurements, required analytes, laboratory analytical services, supplemental instrumentation, and data-management requirements. CONSULTANT will document SJRA comments and decisions and incorporate one consolidated set of comments into the Final Water Quality Sampling and Monitoring Plan.
4. Data Request and Reviews: CONSULTANT will request, manage, and review historical and current data required for Phase 2 testing. This will include requests for data collected since the Phase 1 data exchange. Services include preparation and tracking of data requests; extraction and organization of data from the SJRA Procure site; maintenance of the project data repository; preparation of data requests supporting testing activities; review of received data for completeness and usability; identification of material data gaps and supplemental monitoring needs; and coordination of additional data collection necessary to support Phase 2 evaluations.

Workshops: *Due Dates:*

1. *Workshop No. 2 – Water Quality Sampling and Monitoring Plan (Virtual)* *Dec 2026*

Deliverables:

1. *Sampling and Analyzer Process-Flow Diagram* *Nov 2026*
2. *Phase 2 Water-Quality Sampling and Monitoring Plan, Draft* *Dec 2026*
3. *Phase 2 Water-Quality Sampling and Monitoring Plan, Final* *Jan 2027*

Task 1204 – Protocol Finalization and Workshops

GSWMRO.1204.0

1. Workshop No. 3 - Unit Process Review and Upcoming Testing. CONSULTANT will review objectives and standard agenda for of bi-weekly calls with operations, TCEQ coordination update, and review of testing objectives, roles and responsibilities, anticipated sampling and historian data collection requests as well as operations prerequisites and defining success for upcoming pre-treatment jar testing, and MF short duration testing. Jar Testing and Microfiltration (MF) Short Duration Testing Protocols will be finalized. *

2. Workshop No. 4 - Interim Results and Upcoming Testing. CONSULTANT will review available results from pretreatment jar testing, MF short duration testing, the GAC performance model and the CT evaluation. CONSULTANT will provide an update on TCEQ Coordination. CONSULTANT will review testing objectives, roles and responsibilities, anticipated sampling and historian data collection requests as well as operations prerequisites and defining success for upcoming MF long duration testing and GAC field testing. MF Long Duration and GAC Field Testing Protocols will be finalized. *
3. Workshop No. 5 - Integrated SWTP and Additional Testing. Review unit-process findings; select operating conditions for integrated testing; and finalize the integrated SWTP testing protocol, sampling plan, operating conditions, and success criteria. CONSULTANT will review Pretreatment Testing and Integrated SWTP Protocol comments and finalize. CONSULTANT will identify uncertainties or risks that prevent confirmation of a proposed capacity or operating condition and define additional testing, monitoring, operational demonstration, or engineering evaluation needed to resolve material uncertainties before re-rating. Pretreatment and Integrated SWTP Testing Protocols will be finalized. *

*CONSULTANT will finalize protocols using Phase 1 findings, baseline data, TCEQ direction, and input from SJRA Operations. Finalization will include identifying sampling points and required instrumentation, operations support and a refined schedule. Interim results will be used to refine later tests and the integrated SWTP protocol. Protocol finalization will be grouped as follows and aligned with the Workshop discussions.

Workshops:	*Due Dates:*
2. Workshop No. 3 – Unit Process Review and Upcoming Testing	*Jan 2027*
3. Workshop No. 4 – Interim Results and Upcoming Testing	*Mar 2027*
4. Workshop No. 5 – Integrated SWTP and Additional Testing	*May 2027*
Deliverables	
1. Jar Testing and MF Short Duration Testing Protocols	*Jan 2027*
2. MF Long Duration and GAC Field Testing Protocols	*Mar 2027*
3. Pretreatment and Integrated SWTP Testing Protocols	*May 2027*

Task 1205 – Pretreatment Testing

GSWMRO.1205.0020

This task is part of the stress testing presented in Phase 1.

1. Bench-scale Jar Testing
   a. CONSULTANT will conduct progressive bench-scale jar testing to optimize coagulant type and dose, coagulation pH, and, as appropriate, polymer use. Testing will evaluate TOC and turbidity removal, floc formation, settling, and treated-water chemistry.
   b. CONSULTANT anticipates four water quality sampling events (initial jar-testing will be up to 1 week, 3 follow up sampling events will be up to 2 days each) outside of scheduled site visits and workshops to capture and jar test variable water quality events.
   c. CONSULTANT will obtain chemical-vendor input on products, test ranges, results, and chemical applications under varying temperature and raw-water conditions.
   d. CONSULTANT will coordinate with chemical vendor to provide confirmation jar testing and recommendations.
   e. CONSULTANT will use historical data, jar tests, and SJRA operating experience to develop criteria for changing coagulants or adjusting dose and pH as raw-water conditions vary.

2. Pretreatment Testing
    a. Following successful bench-scale jar testing, CONSULTANT will work with SJRA to test the pretreatment for treatability with enhanced coagulation to reduce TOC and hydraulic loading limitations beyond 30 MGD. CONSULTANT will provide up to one week of on-site support for pretreatment testing.
    b. Pretreatment testing will evaluate treatment performance, inclined plate settler surface loading rate, chemical dose, pH, alkalinity, and corrosivity indicators.
    c. SJRA will procure and install a temporary chemical-feed system designed by CONSULTANT for pH adjustment and, if supported by jar-testing results, will modify existing chemical-feed systems to use alternative pretreatment chemicals. The temporary system will not be integrated with the SCADA system; it will be manually monitored and adjusted and operated only while CONSULTANT is onsite for testing, and not for unattended or routine operation.

Deliverables: *Due Dates:*

1. *Bench-Scale Jar Testing Results and Recommended Conditions for Full-Scale Testing incorporated into Workshop No. 4 interim results, the Integrated SWTP Protocol, and TM2* *Mar 2027*

2. *Treatment testing results, demonstrated capacity, and recommendations incorporated into TM2* *Nov 2027*

Task 1206 – Microfiltration System Testing

GSWMRO.1206.0020

This task is part of the stress testing presented in Phase 1.

1. Short-duration Testing:
    a. CONSULTANT will conduct short-duration elevated-flux testing at selected rack configurations, including design-capacity, N+2, and N+1 flux conditions.
    b. CONSULTANT will conduct one period of on-site short-duration testing totaling up to one week. CONSULTANT will collect field data and request applicable SCADA, historian, water-quality, and operating data from SJRA. CONSULTANT will provide two engineers onsite to conduct testing with SJRA operations staff.
2. Long-duration Testing:
    a. Based on short-duration results, two representative racks will be tested at selected elevated-flux conditions for up to 4 months. Testing will target approximately three CIP intervals, as operating conditions and project schedule allow, to evaluate sustainable flux, fouling rate, TMP development, recovery, and cleaning frequency.
    b. It is assumed SJRA will contract with AriaFiltra for programming changes required to support the N+1 testing. CONSULTANT will prepare programming scope of work and review changes implemented with SJRA operations.
    c. For long-duration testing, CONSULTANT will provide up to one week of on-site support to initiate extended testing and establish operating conditions and data collection. CONSULTANT will review interim operating data with SJRA during extended testing and provide up to one additional week of on-site support near completion to confirm results and

complete targeted testing. Biweekly data and operational meetings will be hosted by CONSULTANT during testing to monitor results.

d. CONSULTANT will present interim results in Workshop No. 4.

e. CONSULTANT will establish sustainable MF capacity, identify limiting conditions, and select MF conditions for integrated testing under Task 1208 and document in TM2.

3. Cleaning Optimization: CONSULTANT will evaluate MF cleaning after establishing baseline and higher-flux capability. The evaluation will assess cleaning chemistry, cleaning recovery, fouling trends, and opportunities to improve sustainable production or extend operating intervals. Short duration optimization testing will occur at the end of the re-rating testing. Up to one week on-site is anticipated. The long-duration testing for optimization is included in the baseline testing. One of the two racks will be allocated for optimization and cleaning evaluations. CONSULTANT will prepare a conceptual design of recommended modification to the cleaning system.

Deliverables:	*Due Dates:*
1. Interim results will be presented in Workshops No. 4 and No. 5.	*Mar/May 2027*
2. Final results, demonstrated capacity, and recommendations incorporated into the TM2	*Nov 2027*

Task 1207 – GAC System Characterization and Testing

GSWMRO.1207.0020

This task is part of the stress testing presented in Phase 1.

1. GAC System Characterization

   a. Individual Contactor Performance Evaluation: CONSULTANT will characterize baseline conditions and performance of individual GAC contactors, including flow distribution, media age, carbon replacement history, TOC removal, and operating performance. CONSULTANT will evaluate performance recovery following carbon replacement, breakthrough behavior, and differences in carbon utilization among contactors. The evaluation will identify factors affecting individual contactor performance and opportunities to improve overall GAC system operation.

   b. Performance Model: CONSULTANT will develop a performance model from historical and Phase 2 operating data to characterize overall GAC system performance. This work will not include a hydraulic or adsorption simulation model. The model will correlate operating conditions and treatment performance to evaluate carbon utilization and predict system performance under higher-flow, N+1, and reduced TOC-loading conditions.

2. GAC Profiling and Pumping Field Testing.

   a. Baseline Unit Contactor Profiling. CONSULTANT will perform field testing with SJRA Operations staff on one representative contactor. Up to one week of on-site testing with two engineers from the CONSULTANT are allocated for contactor profiling, media-depth measurements, supplemental sampling, backwash testing, and pumping-system testing. CONSULTANT will request applicable SCADA, historian, laboratory, carbon replacement, backwash, and operating data from SJRA.

b. Increased Media Depth Contactor Profiling. CONSULTANT will evaluate an increased media depth contactor considering EBCT, carbon volume, hydraulic loading, headloss, available freeboard, and demonstrated backwash bed-expansion capability. CONSULTANT will coordinate with SJRA operations for timing of addition during testing.

c. Backwash Expansion Testing. CONSULTANT will measure actual backwash flow and loading rate, bed expansion, backwash duration, and headloss recovery. Results will define the relationship between flow and bed expansion and establish whether the existing system adequately expands and cleans the current media bed and can support potential increased media depth.

3. GAC Operating Strategies and Capacity Evaluation

a. GAC Operating Strategy. CONSULTANT will evaluate contactor sequencing, carbon replacement timing and frequency, media depth, backwash operation, carbon utilization, and N+1 operation. Historical and Phase 2 data will support estimates of carbon replacement requirements and development of operating strategies for higher-capacity conditions.

b. Intermediate Pump Station. CONSULTANT will evaluate Intermediate Pump performance at representative and proposed higher-flow conditions. The evaluation will define available capacity and operating limitations and identify modifications required to support increased SWTP production.

c. Up to one week of on-site testing with two engineers from the CONSULTANT are allocated for this task.

Deliverables:	*Due Dates:*
1. Interim results will be presented in Workshops No. 4 and No. 5	*Mar/May 2027*
2. Final GAC characterization, performance model, demonstrated capacity, and recommendations incorporated into the TM2	*Nov 2027*

Task 1208 – Integrated SWTP Performance Testing

GSWMRO.1208.0020

This task is part of the stress testing presented in Phase 1. CONSULTANT will conduct up to one week of integrated SWTP testing with two engineers from the CONSULTANT and SJRA Operations at higher-production conditions selected from unit-process testing and will be defined further in the Protocol based on unit process testing. In general, CONSULTANT is seeking to test the following:

1. Integrated SWTP Field Testing. Testing will demonstrate concurrent pretreatment, MF, and GAC operation and evaluate interactions with pumping, backwash, recycle and residuals handling, chemical systems, storage, instrumentation, and controls during representative operating cycles.
2. Capacity and Redundancy Demonstration. CONSULTANT will evaluate hydraulic stability, process control, equipment performance, alarms, operator intervention, and supporting systems at increased production.

Deliverables:	*Due Dates:*
Interim results will be presented in Workshop No. 5	*May 2027*
Final data incorporated into TM2	*Nov 2027*

Task 1209 – Re-Rating Alternatives and OPCC

GSWMRO.1209.0020

1. Re-Rating Capacity, Phasing, and Alternative Development
    a. Integrated Capacity Evaluation. CONSULTANT will integrate unit-process and whole-plant results to define sustainable net production, redundancy requirements, water-quality limits, and operating constraints.
    b. Ancillary System Impacts. CONSULTANT will identify available capacity, operating changes, and improvements required for pumping, backwash and recycle, residuals handling, chemical feed, storage, instrumentation, controls, and other supporting systems.
    c. Electrical Evaluation. CONSULTANT will review record drawings to identify impacts of alternatives on electrical service.
    d. SCADA and Controls Evaluation. CONSULTANT will review record drawings and Operations and Maintenance documentation to identify impacts of alternatives on SCADA and Controls. Detailed programming and HMI modifications are not included.
    e. Capacity Alternatives and Phasing. CONSULTANT will develop feasible SWTP re-rating alternatives based on demonstrated performance and, where supported by testing, identify intermediate and ultimate capacity increments.
    f. Risk and Additional Testing. CONSULTANT will identify uncertainties or risks that prevent confirmation of a proposed capacity or operating condition. CONSULTANT will define additional testing, monitoring, operational demonstration, or engineering evaluation needed to resolve material uncertainties before re-rating.
    g. Recommendation. CONSULTANT will recommend the preferred re-rating alternative, phased capacities, required improvements, implementation sequence, and Phase 3 regulatory path.
2. OPCC and Relative Operational Cost Development
    a. CONSULTANT will prepare an Opinion of Probable Construction Cost (OPCC) for each feasible re-rating alternative and applicable capacity phase. The OPCCs will be prepared as AACE Class 4 estimates based on the level of project definition available during Phase 2. Level of effort is based on the assumptions provided in the Assumptions Section of this scope.
    b. CONSULTANT will document the estimate basis, assumptions, allowances, exclusions, and expected accuracy range. Engineering, permitting, construction-phase services, escalation, and other procurement costs provided by SJRA will be identified separately.
    c. CONSULTANT will compare alternatives using the OPCCs and relative operating costs for raw water, chemical and power consumption and sludge production and hauling where differences are anticipated. Other operating costs assumed to be unchanged will not be quantified. SJRA will provide applicable unit costs. CONSULTANT will document the comparison in TM2 and incorporate one consolidated set of SJRA comments.
3. Workshop No. 6 – Re-Rating Alternatives and OPCC. CONSULTANT will present the integrated findings, feasible re-rating alternatives, key risks and unresolved issues, and the OPCC and operating-cost comparison. CONSULTANT will facilitate SJRA's selection of the preferred alternative and confirm the Phase 3 regulatory path and next steps.

Deliverables:	*Due Dates:*
1. *Workshop No. 6 Presentation: Re-Rating Alternatives and OPCC Workshop:*	*Oct 2027*

1. *Workshop No. 6 – Re-Rating Alternatives and OPCC* *Oct 2027*

Task 1210 – Disinfection Concentration-Time (CT) Evaluation and Re-Rating

GSWMRO.1210.0020

1. CT Alternatives Evaluation.
   a. CONSULTANT will review the approved CT study and correspondence, record drawings, GST operating data, transmission-system information, disinfectant data, and applicable Phase 2 results. The existing study supports 30 MGD at a minimum GST volume of 15 percent; higher production requires an updated demonstration of four-log virus inactivation.
   b. CONSULTANT will establish the following CT assumptions with SJRA Operations and Technical Services:
      i. Proposed re-rated capacity or capacities;
      ii. Existing GST dimensions, baffling configuration, usable volume, minimum and maximum operating levels, and applicable low-level operating controls;
      iii. Minimum GST water level or volume that SJRA can reliably maintain during normal, peak-demand, maintenance, and emergency operating conditions;
      iv. Disinfectant application and monitoring locations, minimum disinfectant residual, finished-water pH and temperature, and other operating conditions affecting virus inactivation;
      v. SJRA's take point immediately downstream of the High Service Pump Station (HSPS);
      vi. Wholesale-customer take points (and planned future take points) and applicable pipeline volume, flow, travel time, and monitoring; and
      vii. Operational, pumping, water-quality, and fire flow constraints on the minimum GST level.
   c. CONSULTANT will separately evaluate CT at SJRA's post-HSPS take point and the nearest downstream wholesale-customer take point to determine whether transmission-pipeline detention time can receive TCEQ CT credit.
   d. CONSULTANT will evaluate CT alternatives for each selected re-rating capacity up to a total of 3 alternatives total. CONSULTANT will develop a planning-level concept identifying the approximate design criteria for each alternative.
2. CT Calculations: CONSULTANT will prepare planning-level calculations using the current TCEQ Surface Water CT Study Template. CONSULTANT will prepare for and participate in one TCEQ meeting to review the proposed capacity, CT strategy, calculation method, and anticipated approval requirements.
3. CONSULTANT will conduct Workshop No. 7 (virtual) with SJRA to review the alternatives and select the CT strategy to be advanced for re-rating.

Deliverables: *Due Dates:*

1. *CT Alternatives Evaluation in TM2* *Nov 2027*
2. *Draft CT Calculations Using the CurrentTCEQ Surface Water CT Study Template* *July 2027*

Workshops:

1. *Workshop No. 7 – CT Alternatives Evaluation (Virtual)* *May 2027*

Task 1211 – SWTP Re-rating Technical Memorandum 2
GSWMRO.1211.0020

1. CONSULTANT will prepare the Stress Testing TM2 to summarize Tasks 1202 through 1210 and recommendations for Phase 3.
    a. CONSULTANT will submit one draft and one final PDF and incorporate one consolidated set of SJRA comments.
    b. The TM will include:
        i. Executive Summary
        ii. Introduction & Phase 2 Objectives
        iii. TCEQ Coordination
        iv. Water Quality and SWTP Sampling Summary
        v. Disinfection Concentration-Time Evaluation
        vi. Stress Testing and Results
            1. Pretreatment Testing and Results
            2. Microfiltration System Testing and Results
            3. GAC and Intermediate/Backwash Pumping Testing and Results
            4. Integrated SWTP Testing and Results
        vii. Re-Rating Alternatives
        viii. CT Alternatives
        ix. OPCC and relative O&M Costs
        x. Recommended Alternatives
        xi. Conclusions and Next Steps for Phase 3
    2. Workshop No. 8 - Draft Technical Memorandum Review. CONSULTANT will conduct one virtual workshop with SJRA to review the draft TM2, including Phase 2 testing results, demonstrated capacities, re-rating and CT alternatives, OPCCs, relative O&M costs, recommended alternatives, and next steps for Phase 3. CONSULTANT will document SJRA comments and decisions and incorporate one consolidated set of comments into the final TM2.

Deliverables:	*Due Dates:*
1. SWTP Re-rating Technical Memorandum 2 Draft	*Nov 2027*
2. SWTP Re-rating Technical Memorandum 2 Final	*Jan 2028*

Workshop:

1. Workshop No. 8 - Draft Technical Memorandum Review Workshop (Virtual)	*Dec 2027*

Task 1212 – Additional Testing and Evaluation

GSWMRO.1212.0020

1. Water Quality Testing: CONSULTANT will coordinate and process payment for specialized analyses with a SJRA-approved laboratory. Costs of lab tests plus 10% will be billed to SJRA through this CP task. Potential analyses include TTHM/HAA formation-potential or simulated-distribution-system testing and other parameters identified during protocol development. The final protocol will define analytical parameters, methods, sample quantities, and locations.
2. Instrumentation: CONSULTANT will assess UV254 as a supplemental indicator of organic removal and DBP precursor loading and determine whether analysis should use an outside laboratory or a SJRA-purchased benchtop UV-VIS spectrophotometer. The assessment will consider cost, sampling frequency, turnaround time, operator use, and potential long-term value to SJRA. If approved by SJRA, SJRA may purchase a Hach DR6000 or equivalent instrument.
3. Additional Testing and Evaluation: CONSULTANT will provide additional testing and evaluation based on initial findings. This could include additional onsite testing or evaluation of pretreatment equipment needed to implement full-scale testing. See SJRA to Provide section.
4. Additional Presentations: CONSULTANT will provide up to 2 presentations to either the GRP Review Committee and/or the SJRA BOD. Topic/content to be defined by SJRA as needed.

Task 1213 – CT Study for TCEQ Submittal

GSWMRO.1213.0020

1. CT Study:
   a. If Task 1206 shows that higher capacity can be supported solely by maintaining a greater minimum GST volume and SJRA authorizes this Additional Service, CONSULTANT will update the approved CT study using the current TCEQ template and guidance to demonstrate four-log virus inactivation at the selected flow.
   b. CONSULTANT will identify the setpoints, alarms, monitoring, and procedures needed to maintain the minimum GST volume. Physical modifications, additional storage or piping, tracer testing, and capital design will be performed in the next phase.
2. Additional TCEQ Coordination:
   a. CONSULTANT will conduct one virtual review meeting and incorporate one consolidated set of SJRA comments before TCEQ submittal.
   b. CONSULTANT will submit the study to TCEQ and respond to one round of comments.

Deliverables:	*Due Dates:*
1. Draft Updated CT Study	*Oct 2027*
2. Final Updated CT Study and TCEQ Submittal	*Dec 2027*
3. Response to One Round of TCEQ Review Comments	*Dec 2027*

SJRA to Provide

1. Task 1205 – Pretreatment Testing: SJRA will be responsible for purchasing, installing and providing power to a temporary pH adjustment chemical and polymer addition required to support full-scale pretreatment testing.
2. Task 1206 – Microfiltration System Testing: SJRA will be responsible for operating the MF system during long-duration testing, including collecting data and performing sampling in accordance with the Water Quality Sampling and Monitoring Plan.
3. Task 1206 – Microfiltration System Testing: SJRA will be responsible for contracting AriaFiltra to implement programming changes required to support the N+1 testing program within the allocated schedule.
4. Task 1212- Additional Testing and Evaluation. SJRA will be responsible for purchasing Instrumentation identified in Task 1212.

Assumptions

1. Site visits will include one technical lead from KMS and one graduate engineer from Plummer.
2. OPCC alternatives development assumes:
    a. Influent: Flow Meter Upsize
    b. Pretreatment: Chemical Addition
    c. MF: Alternatives presented as moving to Phase 2 in TM1
    d. GAC: Added GAC
    e. IBPS including VFDs/Controls:
        i. Adding a Backwash Pump or upsizing the BW Pump Station
        ii. Adding a Pump in spare slot in Intermediate Pump Station

Summary of site visits

Task/ Sub-task No.	Task Name	Duration
1205.1(a)	Initial Bench-Scale Jar Testing	Up to 1 week
1205.1(b)	Jar Testing Events	3 separate visits; 2 days/each
1205.2(c)	Full-Scale Pretreatment Testing	Up to 1 week
1206.1(b)	MF Short-Duration Testing	Up to 1 week
1206.2(c)	MF Long-Duration Testing – Initiation Support	Up to 1 week
1206.2(c)	MF Long-Duration Testing – Completion Support	Up to 1 week
1206.3	MF Cleaning Optimization Testing	Up to 1 week
1207.2(a)	GAC Baseline Unit Contactor Profiling	Up to 1 week
1207.3(c)	GAC Operating Strategies and Capacity Evaluation	Up to 1 week
1208	Integrated SWTP Performance Testing	Up to 1 week
Total specifically identified site visits/testing periods		**12 site visits/testing periods; up to 9 weeks plus 6 additional sampling days**

Workshop Summary

Task/ Sub-task No.	Workshop No.	Topic	Format
1201.1	1	Project Initiation	In person
1203.3	2	Water Quality Sampling and Monitoring Plan	Virtual
1204.1	3	Unit Process Review and Upcoming Testing	In person
1204.2	4	Interim Results and Upcoming Testing	In person
1204.3	5	Integrated SWTP and Additional Testing	In person
1209.3	6	Re-Rating Alternatives and OPCC	In person
1210.3	7	CT Alternatives Evaluation	Virtual
1211.2	8	Draft Technical Memorandum Review	Virtual

Schedule Requirements:

Commence Services: October 28, 2026
Completion of Services: March 19, 2028

GRP MRO Project Schedule

Project Start Date 11/2/2026 (Monday)
Display Week 1
Project Lead Mary Portillo

WBS	TASK	START	END	DAYS	% DONE	WORK DAYS
1201	**PROJECT MANAGEMENT**		-			-
1201.1	Project Initiation Meeting (Workshop No. 1)	Mon 11/09/26	Sun 11/15/26	7	0%	5
1201.2	Project Coordination, Management, and Communication	Mon 11/02/26	Sun 3/19/28	504	0%	360
1202	**TCEQ COORDINATION**		-			-
1202.1	Pre-testing coordination	Mon 11/16/26	Sun 1/10/27	56	0%	40
1202.2	Interim Testing coordination	Mon 2/08/27	Sun 3/21/27	42	0%	30
1202.3	Final Phase 2 Coordination	Mon 7/19/27	Sun 8/29/27	42	0%	30
1202.4	Regulatory Documentation in TM2	Mon 9/27/27	Sun 11/07/27	42	0%	30
1203	**Sampling Plan and Data Requests**		-			-
1203.1	Sample Process Flow Diagram	Mon 11/02/26	Sun 11/22/26	21	0%	15
1203.2	WQ Sampling and Monitoring Plan - Draft	Mon 11/02/26	Sun 12/13/26	42	0%	30
1203.3	Virtual draft review Workshop No. 2	Mon 12/14/26	Sun 12/20/26	7	0%	5
1203.4	WQ Sampling and Monitoring Plan - Final	Mon 12/14/26	Sun 1/17/27	35	0%	25
1203.5	Data Request and Review	Mon 11/30/26	Sun 6/27/27	210	0%	150
1204	**PROTOCOL FINALIZATION, WKSPS, & PROCES**		-			-
1204.1	Finalize Protocols a (Jar/MF short)	Sun 1/10/27	Sat 1/16/27	7	0%	5
1204.2	Finalize Protocols b (MF long, GAC Field)	Mon 3/01/27	Sun 3/14/27	14	0%	10
1204.3	Finalize Protocols c (Pretreat/ISWTP)	Wed 4/21/27	Tue 5/04/27	14	0%	10
1204.4	Workshop No. 3 Unit Process Review and Testing	Sun 1/03/27	Sat 1/16/27	14	0%	10
1204.5	Workshop No. 4 (Unit Process Interim Results)	Sun 3/07/27	Sat 3/20/27	14	0%	10
1204.6	Workshop No. 5 (Integrated SWTP Test and Additonal Testing (if needed)	Fri 5/07/27	Thu 5/20/27	14	0%	10
1205	**Pretreatment Testing**		-			-
1205.1	Bench-scale Jar Testing	Sun 1/10/27	Sat 2/13/27	35	0%	25
1205.2	Full-scale Testing	Fri 5/14/27	Thu 5/27/27	14	0%	10
1206	**Microfiltration System Testing**		-			-
1206.1	Short Term Testing	Mon 1/18/27	Sun 1/31/27	14	0%	10
1206.2	Long Term Testing	Mon 3/15/27	Sun 7/18/27	126	0%	90
1206.3	Cleaning Optimization	Mon 6/14/27	Sun 7/18/27	35	0%	25
1207	**GAC System and Backwash Pump Station Char**		-			-
1207.1	Water Quality Sampling and Monitoring	Mon 11/23/26	Sun 1/24/27	63	0%	45
1207.2	GAC System Charachterization	Mon 11/23/26	Sun 1/24/27	63	0%	45
1207.3	GAC and Pumping Field Testing	Mon 3/01/27	Sun 3/28/27	28	0%	20
1207.4	GAC Operating Strategies and Capacity Evaluation	Mon 3/01/27	Sun 3/28/27	28	0%	20
1208	**Integrated SWTP Performance Demonstration**		-			-
1208.1	Integrated SWTP Field Testing	Mon 5/31/27	Sun 6/13/27	14	0%	10
1208.2	Capacity and Redundancy Demonstration	Mon 6/07/27	Sun 6/13/27	7	0%	5
	Additional testing schedule float	Mon 6/14/27	Sun 8/01/27	70	0%	35
1209	**RE-RATING ALTERNATIVES AND OPCC**		-			-
1209.1	Re-Rating Alternatives and Class 4 OPCC	Mon 8/02/27	Sat 10/09/27	69	0%	50
1209.2	Workshop No. 6 – Re-Rating Alternatives	Mon 9/27/27	Sun 10/03/27	7	0%	5
1210	**CT EVALUATION AND RE-RATING**		-			-
1210.1	CT Alternatives Evaluation and Workshop 7	Mon 3/01/27	Sun 5/30/27	91	0%	65
1210.2	Draft CT Calculations Using Current TCEQ Surface Water CT Study Template	Sun 5/30/27	Sun 8/01/27	64	0%	45
1211	**TM AND PHASE 3 RECOMMENDATIONS**		-			-
1211.1	Technical Memorandum Draft	Mon 9/27/27	Sun 11/14/27	49	0%	35
1211.2	Technical Memorandum Final	Mon 12/06/27	Sun 1/02/28	28	0%	20

Gantt Chart

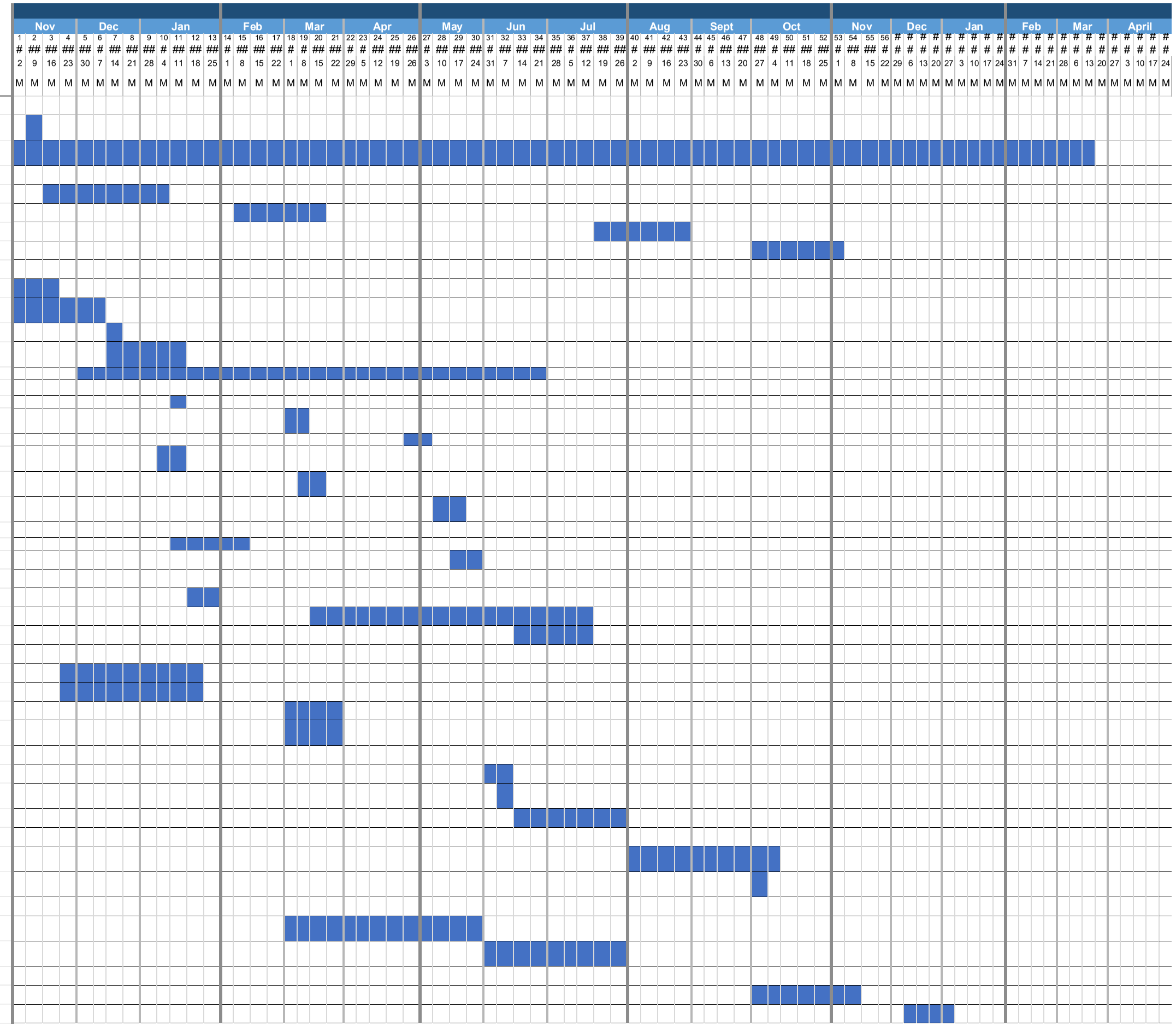

Printed 9/29/2026

Project Start Date 11/2/2026 (Monday)
Project Lead Mary Portillo
Display Week 1

WBS	TASK	START	END	DAYS	% DONE	WORK DAYS
1211.3	Workshop No. 8 - Draft Tech Memo Review	Mon 11/29/27	Sun 12/05/27	7	0%	5
1212	**Additional Testing and Evaluation**		-			-
1212.1	Water Quality Testing	Mon 11/30/26	Sun 8/08/27	252	0%	180
1212.3	Additional Testing and Evaluation	Mon 5/31/27	Sun 8/08/27	70	0%	50
1213	**CT STUDY FOR TCEQ SUBMITTAL**		-			-
1213.1	CT Study	Mon 10/04/27	Sun 10/31/27	28	0%	20
1213.2	Additional TCEQ Coordination	Mon 10/04/27	Sun 12/05/27	63	0%	45

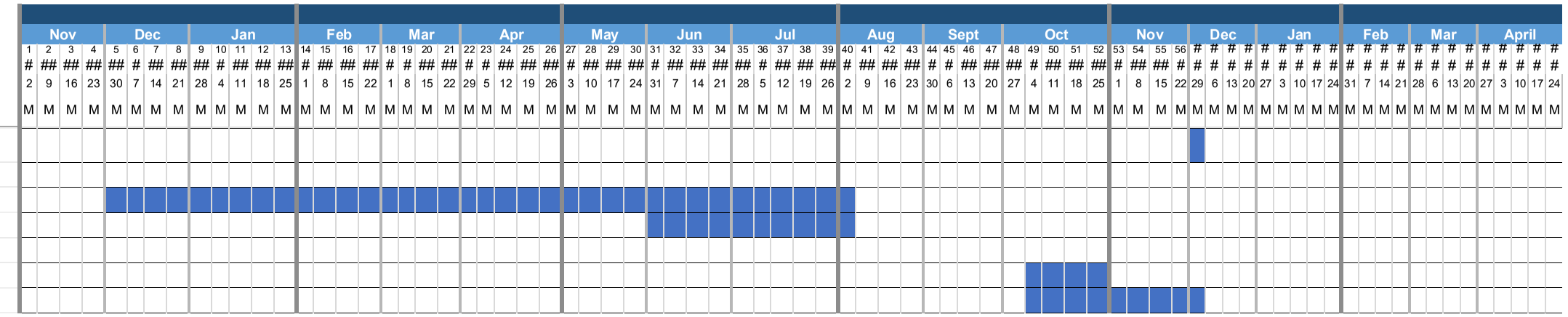

Printed 9/29/2026

EXHIBIT B

COMPENSATION

Compensation terms for cost reimbursable and lump sum Services:

Task	Description	Fee	Fee Type
1201	Project Management	253,000.00	LS
1202	TCEQ Coordination	48,000.00	LS
1203	Sampling Plan and Data Requests	55,000.00	LS
1204	Protocol Finalization and Workshops	125,000.00	LS
1205	Pretreatment Testing	64,000.00	LS
1206	Microfiltration System Testing	102,000.00	LS
1207	GAC System Characterization and Testing	75,000.00	LS
1208	Integrated SWTP Performance Testing	30,000.00	CP
1209	Re-Rating Alternatives and OPCC (* 75%)	114,000.00	LS
1210	Disinfection Concentration-Time (CT) Evaluation and Re-Rating	43,000.00	LS
1211	SWTP Re-rating Technical Memorandum 2 (*1)	87,000.00	LS
1212	Additional Testing and Evaluation	278,000.00	CP
1213	CT Study for TCEQ Submittal (*1)	30,000.00	CP
	Total	966,000.00	**LS**
	Total	338,000.00	**CP**
	Grand Total	1,304,000.00	
	2027 Demonstration Testing and Design Fee Contribution	1,101,500.00	
	***2028 Design Fee Contribution**	202,500.00	

B.1. COMPENSATION BASED ON COST WITH MULTIPLIER

For professional and non-professional staff, SJRA will compensate CONSULTANT on the basis of a multiplier added to the Raw Salary Cost as shown in the table below for the Scope of Work specified in Exhibit A. Professional staff are defined as a manager, supervisor, engineer, scientist or other recognized profession. Typically, professional employees are salaried exempt employees. Typically, non-professional employees are hourly non-exempt employees. The Raw Salary Cost for salaried employees is defined as the annual base salary excluding bonuses, burdens, and benefits divided by 2080. For hourly personnel, the Raw Salary Cost is defined as the hourly wage paid to the employee exclusive of burdens and benefits. Standard equipment, communications, technology, or similar hourly expenses that are typically part of CONSULTANT's hourly rates may be included in the Raw Salary Cost for salaried employees and hourly personnel, if approved by SJRA. Any shift premiums or

premiums paid for hours worked in excess of 40 per week will be added to the base hourly wage and will be considered a part of the Raw Salary Cost.

(a) RAW SALARY MULTIPLIERS

3.25 for professional and non-professional staff working at CONSULTANT or its subcontractor, subconsultant, or vendor offices

2.86 for professional and non-professional staff working in the field during construction or at SJRA offices for a minimum period of six (6) consecutive months

2.75 for construction inspectors working in the field

(b) EXPENSES

"Billable Expenses" include all costs and expenses directly attributable to performance of the Services, which are in good accounting practice direct costs of the Services and not covered by the allowance for payroll burden and general office overhead and profit. Costs of outside services will be charged at actual invoice cost plus ten percent (10%). "Billable Expenses" include: subconsultants; travel expenses to and from locations outside Harris and Montgomery Counties; and copies of all deliverables submitted to SJRA. All local vehicles used outside Harris and Montgomery Counties will be reimbursed at the current IRS allowable rate with no markup. All other expenses are considered to be covered by the allowance for payroll burden and general office overhead and profit and are non-billable expenses.

B.2. LUMP SUM COMPENSATION

SJRA will compensate CONSULTANT on the basis of a mutually agreed upon lump sum price for the scope of work specified in Exhibit A. The cost estimate will include a summary breakdown showing the labor hours and cost, subconsultant costs, and other direct costs included in the estimate. Labor rates to be used in preparing the estimate will be the actual salary or wage of the employee times the appropriate multiplier specified in Paragraph A.1(a) above. CONSULTANT will submit and SJRA will pay monthly invoices based on the mutually agreed upon percentage of the Services completed.

Project Owner: SJRA

Project Name: MRO Phase 2

Task	Description	R1	R2	R3	R4	R8	R9	R10	R11	Total Labor Hours	Labor Fee	Total Expenses	Total Subcontractor Cost	Total Fee
		Portillo, Mary	Monaco, Paula	Fearney, Kelly	Mukhopadhyay, Suparna	Zuklic, Nick	Reale, Peter	Battle, Eric	Utley, Ashley					
	Multiplier: 3.25	$ 378.30	$ 265.82	$ 307.71	$ 204.78	$ 139.65	$ 224.28	$ 343.75	$ 122.46					
	Total	**238**	**667**	**118**	**563**	**1452**	**126**	**91**	**63**	**3323**	**$ 688,803**	**$ 165,317**	**$ 449,880**	**$ 1,304,000**
1201		**83**	**287**	**4**	**256**	**197**	**0**	**0**	**63**	**890**	**$ 196,570**	**$ 6,428**	**$ 50,002**	**$ 253,000**
1201.1	Project Initiation Meeting, Workshop No. 1	21	42	4	42	42	0	0	0	151	$ 34,806	$ 6,428	$ 50,002	$ 91,236
1201.2	Project Coordination, Management, and Communication	62	245	0	214	155	0	0	63	739	$ 161,764	$ -	$ -	$ 161,764
1202	**TCEQ Coordination**	**0**	**84**	**0**	**0**	**0**	**104**	**0**	**0**	**189**	**$ 45,608**	**$ -**	**$ 2,392**	**$ 48,000**
1202.1	Pre-Testing Coordination:	0	21	0	0	0	21	0	0	42	$ 10,202	$ -	$ 2,392	$ 12,594
1202.2	Interim Coordination:	0	21	0	0	0	21	0	0	42	$ 10,202	$ -	$ -	$ 10,202
1202.3	Final Phase 2 Coordination:	0	21	0	0	0	21	0	0	42	$ 10,202	$ -	$ -	$ 10,202
1202.4	Regulatory Documentation	0	21	0	0	0	42	0	0	63	$ 15,002	$ -	$ -	$ 15,002
1203	**Sampling Plan and Data Requests**	**8**	**33**	**8**	**41**	**103**	**0**	**0**	**0**	**193**	**$ 37,060**	**$ -**	**$ 17,940**	**$ 55,000**
1203.1	Sample Process Flow Diagram:	2	21	2	0	42	0	0	0	67	$ 12,839	$ -	$ 17,940	$ 30,779
1203.2	Water Quality Sampling and Monitoring Plan Draft	1	3	3	15	15	0	0	0	37	$ 7,265	$ -	$ -	$ 7,265
1203.3	Workshop No. 2 - WQ Sampling and Monitoring Plan	4	8	2	4	25	0	0	0	43	$ 8,566	$ -	$ -	$ 8,566
1203.4	Water Quality Sampling and Monitoring Plan Final	1	1	1	7	3	0	0	0	13	$ 2,804	$ -	$ -	$ 2,804
1203.5	Data Requests and Reviews	0	0	0	15	18	0	0	0	33	$ 5,585	$ -	$ -	$ 5,585
1204	**Protocol Finalization and Workshops**	**39**	**51**	**6**	**0**	**189**	**0**	**0**	**0**	**285**	**$ 56,551**	**$ 19,413**	**$ 49,036**	**$ 125,000**
1204.1	Workshop No. 3 - Unit Process Review and Upcoming Testing	13	17	2	0	63	0	0	0	95	$ 18,850	$ 6,471	$ 49,036	$ 74,357
1204.2	Workshop No. 4 - Interim Results and Upcoming Testing	13	17	2	0	63	0	0	0	95	$ 18,850	$ 6,471	$ -	$ 25,321
1204.3	Workshop No. 5 - Integrated SWTP and Additional Testing	13	17	2	0	63	0	0	0	95	$ 18,850	$ 6,471	$ -	$ 25,321
1205	**Pretreatment Testing**	**8**	**34**	**26**	**0**	**189**	**0**	**0**	**0**	**257**	**$ 46,459**	**$ 15,149**	**$ 2,392**	**$ 64,000**
1205.1	Bench-Scale Testing	4	17	13	0	126	0	0	0	160	$ 27,629	$ 9,737	$ 2,392	$ 39,758
1205.2	Pretreatment Testing	4	17	13	0	63	0	0	0	97	$ 18,830	$ 5,412	$ -	$ 24,242
1206	**Microfiltration System Testing**	**3**	**10**	**4**	**0**	**126**	**0**	**0**	**0**	**143**	**$ 22,620**	**$ 9,920**	**$ 69,460**	**$ 102,000**
1206.1	Short-Duration MF Testing	1	4	2	0	42	0	0	0	49	$ 7,922	$ 2,933	$ 69,460	$ 80,315
1206.2	Long-Duration MF Testing	1	4	2	0	42	0	0	0	49	$ 7,922	$ 4,473	$ -	$ 12,395
1206.3	Cleaning Optimization	1	2	0	0	42	0	0	0	45	$ 6,775	$ 2,515	$ -	$ 9,290
1207	**GAC System Characterization and Testing**	**3**	**10**	**6**	**0**	**104**	**0**	**0**	**0**	**123**	**$ 20,163**	**$ 2,167**	**$ 52,670**	**$ 75,000**
1207.1	GAC System Characterization	1	4	4	0	33	0	0	0	42	$ 7,281	$ -	$ 52,670	$ 59,951
1207.2	GAC Profiling and Pumping Field Test	1	3	1	0	42	0	0	0	47	$ 7,349	$ 2,167	$ -	$ 9,516
1207.3	GAC Operating Strategies and Capacity Evaluation	1	3	1	0	29	0	0	0	34	$ 5,533	$ -	$ -	$ 5,533
1208	**Integrated SWTP Performance Testing**	**2**	**6**	**4**	**0**	**58**	**0**	**0**	**0**	**70**	**$ 11,682**	**$ 2,448**	**$ 15,870**	**$ 30,000**
1208.1	Integrated SWTP Field Testing	1	3	1	0	29	0	0	0	34	$ 5,533	$ 2,448	$ 15,870	$ 23,851
1208.2	Capacity and Redundancy Demonstration	1	3	3	0	29	0	0	0	36	$ 6,149	$ -	$ -	$ 6,149
1209	**Re-Rating Alternatives and OPCC**	**5**	**19**	**16**	**63**	**78**	**0**	**52**	**0**	**233**	**$ 53,535**	**$ 6,461**	**$ 54,004**	**$ 114,000**
1209.1	Re-Rating and Phasing Alternatives Development	1	2	2	42	42	0	42	0	131	$ 30,429	$ -	$ 54,004	$ 84,433
1209.2	OPCC and Relative Operating Cost Development	1	2	2	0	15	0	6	0	26	$ 5,683	$ -	$ -	$ 5,683
1209.3	Workshop No. 6, Re-Rating Alternatives and OPCC	3	15	12	21	21	0	4	0	76	$ 17,423	$ 6,461	$ -	$ 23,884
1210	**Disinfection CT Evaluation and Re-Rating**	**11**	**25**	**5**	**58**	**73**	**8**	**16**	**0**	**199**	**$ 41,804**	**$ -**	**$ 1,196**	**$ 43,000**
1210.1	CT Alternatives Evaluation	8	18	2	41	41	2	12	0	127	$ 27,214	$ -	$ 1,196	$ 28,410
1210.2	CT Calculations	1	3	1	0	15	2	0	0	22	$ 4,027	$ -	$ -	$ 4,027
1210.3	Workshop No. 7 - CT Alternatives	2	4	2	17	17	4	4	0	50	$ 10,563	$ -	$ -	$ 10,563

Task	Description	R1	R2	R3	R4	R8	R9	R10	R11	Total Labor Hours	Labor Fee	Total Expenses	Total Subcontractor Cost	Total Fee
		Portillo, Mary	Monaco, Paula	Fearney, Kelly	Mukhopadhyay, Suparna	Zuklic, Nick	Reale, Peter	Battle, Eric	Utley, Ashley					
1211	**SWTP Re-Rating Technical Memorandum 2**	**6**	**27**	**7**	**74**	**89**	**0**	**23**	**0**	**227**	**$ 46,934**	**$ -**	**$ 40,066**	**$ 87,000**
1211.1	Draft Technical Memorandum Preparation	1	12	4	59	59	0	13	0	149	$ 29,433	$ -	$ 40,066	$ 69,499
1211.2	Workshop No. 8 - TM2	4	12	2	15	15	0	6	0	54	$ 12,547	$ -	$ -	$ 12,547
1211.3	Final Technical Memorandum	1	3	1	0	15	0	4	0	24	$ 4,953	$ -	$ -	$ 4,953
1212	**Additional Testing**	**63**	**63**	**29**	**42**	**209**	**4**	**0**	**0**	**410**	**$ 88,188**	**$ 103,332**	**$ 86,480**	**$ 278,000**
1212.1	Water Quality Testing:	0	0	0	0	0	0	0	0	0	$ -	$ 88,000	$ 86,480	$ 174,480
1212.2	Instrumentation:	0	0	0	0	0	0	0	0	0	$ -	$ -	$ -	$ -
1212.3	Additional Testing and Evaluation	21	21	21	0	167	0	0	0	230	$ 43,310	$ 10,942	$ -	$ 54,252
1213.3	Additonal Presentations	42	42	8	42	42	4	0	0	180	$ 44,878	$ 4,390	$ -	$ 49,268
1213	**CT Study for TCEQ Submittal**	**7**	**18**	**3**	**29**	**37**	**10**	**0**	**0**	**104**	**$ 21,628**	**$ -**	**$ 8,372**	**$ 30,000**
1213.1	Draft Updated CT Study	4	10	2	21	21	4	0	0	62	$ 12,840	$ -	$ 8,372	$ 21,212
1213.2	Additional TCEQ Coordination	1	4	0	0	8	4	0	0	17	$ 3,456	$ -	$ -	$ 3,456
1213.3	Final CT Study and TCEQ Submittal	2	4	1	8	8	2	0	0	25	$ 5,332	$ -	$ -	$ 5,332
	Total	**238**	**667**	**118**	**563**	**1452**	**126**	**91**	**63**	**3323**	**$ 688,803**	**$ 165,317**	**$ 449,880**	**$ 1,304,000**

EXHIBIT C
SJRA'S INSURANCE REQUIREMENTS

1. General Requirements. CONSULTANT shall, at all times during the performance of Services issued under this Agreement and for not less than two years after the completion of any Services, provide and require all subconsultants and subcontractors to provide insurance coverage with companies lawfully authorized to do business in Texas and acceptable to SJRA and with forms of policies acceptable to SJRA, which coverage will protect CONSULTANT from claims set forth below which may arise out of or result from CONSULTANT's Services and operations under this Agreement for which CONSULTANT may be legally liable, whether such Services or operations are by CONSULTANT or a subconsultant or subcontractor of CONSULTANT or by anyone directly or indirectly employed by any of them, or by anyone for whose acts any of them may be liable, and meeting not less than the minimum requirements set forth in this Exhibit C. Such insurance is to be provided at the sole cost of CONSULTANT and all subconsultants and subcontractors. The terms "subconsultant" and "subcontractor" for the purposes of this Exhibit C shall include subconsultants and subcontractors of any tier.

(a) **Kinds of Claims**

(1) claims under workers' compensation, disability benefit and other similar employee benefit acts which are applicable to CONSULTANT's Services to be performed;

(2) claims for damages because of bodily injury, occupational sickness or disease, or death of CONSULTANT's employees;

(3) claims for damages because of bodily injury, sickness or disease, or death of any person other than CONSULTANT's employees;

(4) claims for damages insured by usual personal injury liability coverage which are sustained (i) by a person as a result of an offense directly or indirectly related to employment of such person by CONSULTANT, or (ii) by another person;

(5) claims for damages other than to CONSULTANT's work itself, because of injury to or destruction of tangible property, including loss of use resulting therefrom;

(6) claims for damages because of bodily injury, death of a person or property damage arising out of ownership, maintenance or use of a motor vehicle;

(7) claims involving contractual liability insurance applicable to CONSULTANT's indemnification obligations under this Agreement; and

(8) claims for errors and omissions in the provision of professional consulting services of the kind rendered by CONSULTANT pursuant to this Agreement.

(b) **Policies and Minimum Limits of Liability**

PLEASE NOTE: These requirements should provide general guidance only, additional requirements based on project specifics of the contract may be required. Contract amounts over limits will require excess coverage to cover the difference. Combined single limits and excess coverage must equal the Contract Amount (CA).

Risk Level TIER 2	Coverage		Contract Amount <=$25k	>$25k-$75k	>$75k-$1M	>=$1M-$2M	>$2M
Professional Services **Services:** Architect, Engineer, Surveyor, Professional Non-AES excluding legal services. **Contract Type:** ➢ Master Professional Services Agreement (MPSA)(AES)-Across all divisions/3 years ➢ Professional Services Agreement (PSA)(AES)-project specific, multiple phases would be new work orders. ➢ Consulting Agreement (Non-AES) ➢ Engagement Letter	**Commercial General Liability (CGL)** (Premises/Completed Operations)	Each Occurrence	$300k	$500k	$1M	$1.5M	= $2M
		Fire Damage	$100k	$250k	$1M	$1.5M	= $2M
		Personal & ADV injury	$300k	$500k	$1M	$1.5M	= $2M
		Aggregate	$600K	$750k	$2M	$3M	= $4M
		Premises/Operations	$300k	$500k	$1M	$1.5M	= $2M
		Products/ Completed Operations	$300K	$500k	$1M	$1.5M	= $2M
	Workers Compensation	Per occurrence bodily injury	$500k	$500k	$500k	$500k	$500k
		Per Occurrence bodily injury by disease	$500k	$500k	$500k	$500k	$500k
		Policy Limit for Bodily Injury Disease	$500k	$500k	$500k	$500k	$500k
	Business Auto Liability Owned, Non-Owned, Hired, Injury and Property coverage for all	Bodily Injury	$300k	$500k	$500k	$1M	$1M
		Property Damage	$300k	$500k	$500k	$1M	$1M
		Combined Single Limit	$600k	$1M	$1M	$2M	= $2M
	Professional/EO Liability	Professional and Cyber required based on the scope of work	500k	$1M	$1M	$2M	= $2M

*Aggregate limits are per 12-month policy period unless otherwise indicated; defense costs shall be excluded from limits of liability of each policy other than Professional Liability Insurance; Commercial General Liability Insurance coverage limits shall be on a per-project basis.

(c) All required insurance shall be maintained with responsible insurance carriers acceptable to SJRA and lawfully authorized to issue insurance of the types and amounts set forth in this Exhibit C. Carriers should have a Best's Financial Strength Rating of at least "A-" and a Best's Financial Size Category of Class VIII or better, according to the most current edition of *Best's Key Rating Guide, Property-Casualty United States* or be of sufficient size and financial strength as adjudged by SJRA to meet the financial obligations evidenced in the certificate of insurance.

(d) All certificates shall be in a form reasonably acceptable to SJRA and each certificate must state to the extent permitted by Texas Insurance Code Chapter 1811 that the policy may not expire or be cancelled, materially modified, or nonrenewed unless the carrier and/or CONSULTANT gives SJRA thirty (30) days advance written notice. When any required insurance, due to the attainment of a normal expiration date or renewal date, shall expire, CONSULTANT shall, prior to such expiration, supply SJRA with certificates of insurance and amendatory riders or endorsements that clearly evidence the continuation of all coverage in the same manner, limits of protection, and scope of coverage as is required by this Agreement. Any renewal or replacement policies shall be in form and substance satisfactory to SJRA and written by carriers acceptable to SJRA and meeting the requirements of this Exhibit C. CONSULTANT shall or shall cause the applicable carrier or carriers to give written notice to SJRA within thirty (30) days of the date on which total claims by any Party against insurance provided pursuant to this Exhibit C reduce the aggregate amount of coverage below the amounts required by this Exhibit C. In addition, CONSULTANT shall or shall cause the applicable carrier or carriers to provide SJRA with amendatory riders or endorsements to the Commercial General Liability Insurance policy that specify that the coverage limits apply on a per-project basis.

(e) With respect to all policies required in this Exhibit C, as soon as practicable prior to execution of this Agreement, CONSULTANT shall deposit with SJRA true and correct original certificates thereof, bearing notations or accompanied by other evidence satisfactory to SJRA that the requirements of this Exhibit C are being met, and such certificates shall be attached hereto as Exhibit D. If requested to do so by SJRA, CONSULTANT shall also furnish the originals or certified copies of the insurance policies for inspection including but not limited to copies of endorsements.

(f) All policies of insurance and certificates, with the exception of Professional Liability and Workers' Compensation Insurance, shall name the INDEMNITEES as additional insureds. Without limiting the foregoing, CONSULTANT's Commercial General Liability Insurance policy shall name the INDEMNITEES as additional insureds pursuant to ISO Additional Insured Endorsements CG 20-10-10-01 and CG 20-33-10-01 or their combined equivalents. Further, the CONSULTANT shall provide the INDEMNITEES any defense provided by its Commercial General Liability Insurance policy to the fullest extent allowed by law.

(g) CONSULTANT hereby waives all rights of recovery and damages against the INDEMNITEES to the extent such damages are covered or should have been covered by the insurance obtained or required to be obtained by CONSULTANT under this Agreement. All of CONSULTANT's policies of insurance, with the exception of Professional Liability Insurance, shall include a waiver of subrogation in favor of the INDEMNITEES.

(h) The Parties intend that the CONSULTANT'S insurance shall be primary and non-contributing with respect to any other insurance maintained by SJRA and all policies of insurance obtained by CONSULTANT shall be endorsed to be primary and non-contributing with respect to any other insurance maintained by SJRA.

(i) If any policy required to be purchased pursuant to this Exhibit C is subject to a deductible, self-insured retention or similar self-insurance mechanism which limits or otherwise reduces coverage, the deductible, self-insured retention, or similar self-insurance mechanism shall be the sole responsibility of CONSULTANT in the event of any loss and CONSULTANT hereby waives any claim therefor against any INDEMNITEE.

(j) CONSULTANT shall require and cause its subconsultants and subcontractors to purchase and maintain the insurance policies set forth in Section 1(b) above with limits of liability commensurate with the amount of each subconsulting or subcontract agreement, but in no case less than $500,000 per occurrence. CONSULTANT shall provide copies of insurance certificates for all such insurance to SJRA prior to any subconsultant's or subcontractor's performance of any Services.

(k) If CONSULTANT fails to procure or to maintain in force the insurance required by this Exhibit C, SJRA may secure such insurance and the costs thereof shall be borne by CONSULTANT. CONSULTANT shall reimburse SJRA the cost of such insurance plus a ten percent (10%) administrative charge within ten (10) days after billing by SJRA. Any unpaid sum remaining fifteen (15) days after billing by SJRA shall bear interest at the rate of twelve percent (12%) per annum until paid by CONSULTANT. Except to the extent prohibited by Subchapter C of Chapter 151 of the Texas Insurance Code, **CONSULTANT SHALL DEFEND, INDEMNIFY, AND HOLD HARMLESS THE INDEMNITEES FROM AND AGAINST ANY AND ALL LOSSES, CLAIMS, DAMAGES, AND EXPENSES (INCLUDING, WITHOUT LIMITATIONS, COURT COSTS, COSTS OF DEFENSE, AND ATTORNEYS' FEES), THAT ANY INDEMNITEE MAY INCUR AS A RESULT OF CONSULTANT'S FAILURE TO OBTAIN OR CAUSE TO BE OBTAINED THE SPECIFIC ENDORSEMENTS OR INSURANCE REQUIRED PURSUANT TO THIS AGREEMENT.** Failure of any INDEMNITEE to identify any deficiency in the insurance forms provided shall not be construed as a waiver of CONSULTANT's obligation to maintain such insurance and to cause such insurance to be maintained.

(l) CONSULTANT's compliance with the provisions of this Exhibit C shall not be deemed to constitute a limitation of CONSULTANT's liability with respect to claims covered by insurance provided or required pursuant to this Exhibit C or in any way limit, modify, or otherwise affect CONSULTANT's obligation under this Agreement or otherwise. CONSULTANT's obligations under this Agreement to defend, indemnify and/or hold harmless INDEMNITEES shall not be limited in any way by any

insurance required of CONSULTANT by this Agreement or otherwise provided or maintained by CONSULTANT. Any insurance obligations of CONSULTANT under this Agreement are independent from CONSULTANT's obligations under this Agreement to defend, indemnify and/or hold harmless INDEMNITEES. The insolvency, bankruptcy, or failure of any insurance company carrying insurance for CONSULTANT or any subcontractor, or the failure or any insurance company to pay claims accruing shall not be held to waive any of the provisions of this Agreement.

(m) If requested by SJRA, CONSULTANT shall furnish or shall cause to be furnished any such other insurance or limits as SJRA may reasonably deem necessary for any work.

EXHIBIT D
CONSULTANT'S CERTIFICATE OF INSURANCE

[ATTACHED HERETO].

San Jacinto River Authority
GRP Membrane Replacement & Optimization
Phase 2

KINSER MEMBRANE SOLUTIONS
SCOPE OF WORK
Version 3, 092826

General

The Scope of Work under this Agreement is for Phase 2 of a three-phase project intended to evaluate and identify potential unutilized capacity within SJRA's 30MGD Surface Water Treatment Plant (SWTP). The primary purpose of Phase 2 is to test the individual unit processes of the plant, along with limited SWTP-level testing to determine the unutilized capacity as the membrane replacements occur at end of their useful life.

Phase 2 includes project management, TCEQ coordination, baseline data collection, testing protocol finalization, unit-process and integrated SWTP testing, re-rating alternatives and OPCCs, CT evaluation, and Technical Memorandum (TM). The work consists of Tasks 1201 through 1207.

Assumptions and notes for scope:

- All tasks, except those identified, are lump sum (fixed price); this includes any expenses tasks. All hours may be shifted between lump sum tasks at end of project to cover overages in tasks.
- KMS rate for 2027 is $260.00
- Plummer specialty insurance requirement of cyber insurance of $8000 is included in the project management task for 2026 and 2027, total of $16,000.
- Expenses shown in each task will not be broken out separately in invoices or receipts attached to invoices for the monthly invoices sent to Plummer. The expenses are lump sum and will be billed as the travel is completed, with a notation of the date in the invoice.

Task 1201 – Project Management (Lump Sum)
GSWMRO.1201.0020

1201.1 Kickoff Workshop. Attend and review slide presentation for one (1) project initiation meeting (**Workshop 1**) with SJRA Project Team. Plummer will prepare kickoff presentation and all formatting. KMS has allocated to provide up to 4 slides to provide technical content related to the topics included in KMS the scope herein. Meeting time for coordination, presentation practice, and review of agendas or meeting minutes is included in Task 1202.2, for meetings or communication outside of the biweekly meeting.

1202.2 Meetings and coordination. The following have been allocated for this task:

a. Plummer/KMS biweekly meetings for 9 months;
b. 6 months of biweekly SJRA Team operations meetings;
c. KMS has allocated 30 hours for miscellaneous Plummer coordination, including the internal KMS/Plummer kickoff, internal meetings outside of the biweekly meeting, schedule review, testing or workshop scheduling, requested meeting-minute review, pre-testing communication, and coordination during development of re-rating alternatives, OPCCs, presentations, deliverables, and the TM. This allocation also includes practice sessions, SharePoint coordination, and SharePoint document support. KMS will notify Plummer when the allocation is at 80% of completion.

1202.3 Expenses. This task includes the expenses allocated for Workshop 1.

Deliverables:

1. *None*

Workshops:
1. *Workshop No. 1 – Project Initiation*

Task 1202 – TCEQ Coordination (Lump Sum)
GSWMRO.1202.0020

1202.2 TCEQ Support. KMS has allocated 8 hours for meetings or other review as required with Plummer.

Deliverables:

1. *None*

Task 1203 – Sampling Plan and Data Requests (Lump Sum)
GSWMRO.1203.0020

1203.1 Sampling Process Flow Diagram. KMS will review the SJRA-provided PFD and mark up missing routine analytes, online meters, and related sampling or monitoring locations for Plummer's use. KMS will provide markups only to Plummer and will not prepare new documents, CAD files, graphics, or final PFD materials. Plummer will prepare final graphics, integrate sampling and analysis requirements into the overall water quality plan, and issue final materials.

1203.2 Water Quality Sampling Plan. KMS will prepare an Excel spreadsheet identifying recommended analytes for the MF, GAC, and ISWTP tasks and will review Plummer's draft Sampling Plan. Plummer will determine sampling methods, laboratory approach, sampling coordination, sample collection and review, and preparation of final Excel data files provided to KMS. KMS analysis of the sampling data is included under the re-rating and presentation tasks.

1203.3 Data Requests and Reviews. KMS will identify data needs, review data provided by Plummer, organize KMS work products, and provide requested files, comments, and documentation to Plummer. Plummer will prepare and issue data requests to SJRA, track request status, receive and log data, and notify KMS when data is available. KMS will provide information and deliverables to Plummer through a Plummer-provided process, such as SharePoint or another designated project platform.

Deliverables:

1. *Email summary (or Plummer provided procedure) of data request to Plummer*
2. *Excel sheet with sampling requirements for MF, GAC, ISWTP*
3. *Markup of PFD*

Task 1204 – Protocol Finalization and Workshops (Lump Sum)
GSWMRO.1204.0

1204.1 Finalize Protocols: KMS will finalize protocols using Phase 1 findings, baseline data, TCEQ direction, and input from SJRA Operations. Finalization will include identifying sampling points and required instrumentation, operations support and a refined schedule. Interim results will be used to refine

later tests and the integrated SWTP protocol. Protocol finalization will be grouped as follows and aligned with the Workshop discussions. KMS is responsible for the draft version of the MF, GAC, and ISWTP protocols. Plummer will format, submit the draft. KMS will edit the final version upon receipt of Plummer or SJRA comments and update the comment log. Meeting time for coordination is included in Task 1202.2, for meetings or communication outside of the biweekly meeting. The following are the deliverables to be prepared for this task by the Plummer/KMS Team – Plummer to determine how to package the final deliverable:

a. Jar Testing and Microfiltration (MF) Short Duration Testing Protocols:
b. MF Long Duration and GAC Field Testing Protocols
c. Pretreatment and Integrated SWTP Testing Protocols

1204.2 Workshop No. 2 – Unit Process Review and Upcoming Testing. This task includes a workshop. Attend and present at one (1) workshop with SJRA Project Team. Plummer will prepare presentation and all formatting. KMS has allocated to provide slides related to the MF and GAC protocols. The topics will be co-developed by Plummer/KMS but will roughly be delineated along the scope within this document. The Workshop will review objectives and standard agenda for of bi-weekly calls with operations, TCEQ coordination update, and review of testing objectives, roles and responsibilities, anticipated sampling and historian data collection requests as well as operations prerequisites and defining success for upcoming pre-treatment jar testing, and MF short duration testing. KMS will review MF Short Duration Protocol comments and finalize. Time for coordination, communication for the workshop preparation are included in Task 1202.2.

1204.3 Workshop No. 3 – Interim Results and Upcoming Testing. KMS will review available results from the MF short duration testing and the GAC performance model. KMS will review testing objectives, roles and responsibilities, anticipated sampling and historian data collection requests as well as operations prerequisites and defining success for upcoming MF long duration testing and GAC field testing. KMS will review MF Long Duration and GAC Field Testing Protocol comments and finalize. This task includes a workshop and preparation of analysis plus preparation of draft slides for the GAC Performance Model, MF short-term testing results overview; and MF long-term testing planning. Time for coordination, communication for the workshop preparation are included in Task 1202.2.

1204.4 Workshop No. 4 – Integrated SWTP and Additional Testing. KMS will review unit-process findings (except pretreatment); select operating conditions for integrated testing; and finalize the integrated SWTP testing protocol, sampling plan, operating conditions, and success criteria. Plummer will review Pretreatment Testing and KMS will review Integrated SWTP Protocol comments and finalize. Plummer/KMS will identify uncertainties or risks that prevent confirmation of a proposed capacity or operating condition and define additional testing, monitoring, operational demonstration, or engineering evaluation needed to resolve material uncertainties before re-rating. This task consists of a workshop. KMS will identify uncertainties or risks that prevent confirmation of a proposed capacity or operating condition. KMS will define additional testing, monitoring, operational demonstration, or engineering evaluation needed to resolve material uncertainties before re-rating. Time for coordination, communication for the workshop preparation are included in Task 1202.2.

1204.1

Deliverables:

1. *Draft MF Short*
2. *Draft MF Long*

3. *Draft GAC -All*
4. *Draft ISWTP*
5. *Draft Slides*

Workshops:
1. *Workshop No. 2 – Testing Program and Protocol Finalization*
2. *Workshop No. 3 – Unit Process Testing Coordination*
3. *Workshop No. 4 – Integrated SWTP Testing Planning*

Task 1205 – Pretreatment Testing (Lump Sum)
GSWMRO.1205.0020

1205.1 Bench-scale Jar Testing. An allocation of 4 hours is provided to review results from Plummer and provide comments and incorporate information into ISWTP evaluation or the Re-Rating development. Comments will be sent via email or provided within the document via track changes on Sharepoint.

1205.2 Full-scale testing. An allocation of 4 hours is included for review and providing comment via track-changes on the Sharepoint site document of the Plummer prepared pretreatment protocol in Task 1204 to ensure coordination with the ISWT testing. It is planned for the pretreatment stress testing to occur immediately before the ISWTP. Comments by email or within Sharepoint document. ***No attendance of testing or other input is included in this scope. KMS has only provided time for the ISWTP testing.***

Task 1206 – Microfiltration System Testing
GSWMRO.1206.0020

This task is part of the stress testing presented in Phase 1.

1206.1 Short-duration Testing:

a. KMS will lead the Plummer/KMS team which will conduct short-duration elevated-flux testing at selected rack configurations as identified in the Protocol.
b. KMS will attend one period of on-site short-duration testing totaling up to one week. KMS will identify the Plummer data to collect field data and request applicable SCADA, historian, water-quality, and operating data from SJRA. Plummer will provide an engineer on-site for all testing to conduct all sampling, collect data, and develop data into an excel file or other agreed-upon format for KMS analysis.

1206.2 Long-duration Testing:

a. KMS will lead the Plummer/KMS team to conduct long duration testing as identified in the Protocol. Based on short-duration results, two representative racks will be tested to including design-capacity, N+2, and N+1 flux conditions at selected elevated-flux conditions for up to 4 months. Testing will target approximately three CIP intervals, as operating conditions and project schedule allow, to evaluate sustainable flux, fouling rate, TMP development, recovery, and cleaning frequency.
b. It is assumed SJRA will contract with AriaFiltra for programming changes required to support the N+1 testing. KMS will prepare programming scope of work and review changes implemented with SJRA operations. Plummer will format the deliverable.
c. For long-duration testing, KMS will attend up to one week of on-site support to initiate extended testing and establish operating conditions and data collection. Plummer will provide an engineer on-site for all testing to conduct all sampling, collect data, and develop data into an excel file or other agreed-upon format for KMS analysis. KMS will review interim operating data with SJRA during extended testing

and provide up to one additional week of on-site support near completion to confirm results and complete targeted testing. Biweekly data and operational meetings will be hosted by Plummer and attended by KMS during testing to monitor results.

d. KMS will present interim results in Workshop 4.
e. KMS will establish sustainable MF capacity, identify limiting conditions, and select MF conditions for integrated testing under Task 1208 and document in TM2.

1206.3 Cleaning Optimization: KMS will evaluate MF cleaning after establishing baseline and higher-flux capability. The evaluation will assess cleaning chemistry, cleaning recovery, fouling trends, and opportunities to improve sustainable production or extend operating intervals. Short duration optimization testing will occur at the end of the re-rating testing. KMS will attend and lead the Plummer/KMS team with support (as described previously) of one Plummer engineer for up to one week on-site for optimization testing, which will be conducted near the MF Short Term Testing. The long-duration testing for optimization is included in the MF Long-Duration Testing task – during this time one of the two racks will be allocated for optimization and cleaning evaluations. KMS will prepare a conceptual design of recommended modification to the cleaning system as part of the Re-Rating Alternatives development by marking up existing As-Built Drawings – Plummer will prepare final graphics of modifications for the TM.

Task 1207 – GAC System and Backwash Pump Station Characterization and Testing
GSWMRO.1207.0020

This task is part of the stress testing presented in Phase 1.

1207.1 GAC System Characterization – this task is preparation of the models and development of graphics to support the presentation of the model in the Workshop and use of the model to predict ability for re-rating in the Re-Rating Alternatives Development. ***This task is dependent on receipt of data from Plummer in an excel format (not pdf reports) via the Sharepoint portal in a timely manner to facilitate the completion on schedule. No other coordination with Plummer is planned for this model development, calibration, and development of graphics/outputs.***

a. Individual Contactor Performance Evaluation: KMS will prepare an excel-based performance model to characterize baseline conditions and performance of individual GAC contactors, including flow distribution, media age, carbon replacement history, TOC removal, and operating performance. KMS will evaluate performance recovery following carbon replacement, breakthrough behavior, and differences in carbon utilization among contactors. The evaluation will identify factors affecting individual contactor performance and opportunities to improve overall GAC system operation.
b. Performance Model: KMS will develop an excel-based performance model from historical and Phase 2 operating data to characterize overall GAC system performance. This work will not include a hydraulic or adsorption simulation model. The model will correlate operating conditions and treatment performance to evaluate carbon utilization and predict system performance under higher-flow, N+1, and reduced TOC-loading conditions.

1207.2 GAC Profiling and Pumping Field Testing.

a. Baseline Unit Contactor Profiling. KMS will lead the Plummer/KMS team to attend and lead field testing with SJRA Operations staff on one representative contactor. Up to one week of on-site testing are allocated for all of Task 1207.2 for contactor profiling, media-depth measurements, supplemental sampling, backwash testing, and pumping-system testing. Plummer engineer will support KMS similar to MF testing and will request applicable SCADA, historian, laboratory, carbon replacement,

backwash, and operating data from SJRA and complete all sampling. Data will be provided to KMS in an excel format.

b. Increased Media Depth Contactor Profiling. KMS will evaluate an increased media depth contactor considering EBCT, carbon volume, hydraulic loading, headloss, available freeboard, and demonstrated backwash bed-expansion capability. KMS will coordinate with SJRA operations for timing of addition during testing. The testing of this contactor will be within the same testing week as the primary contactor in Part a. above.
c. Backwash Expansion Testing. KMS will lead the testing where the team will measure actual backwash flow and loading rate, bed expansion, backwash duration, and headloss recovery. Results will define the relationship between flow and bed expansion and establish whether the existing system adequately expands and cleans the current media bed and can support potential increased media depth.

1207.3 GAC Operating Strategies and Capacity Evaluation

a. GAC Operating Strategy. KMS will lead the Plummer/KMS team to evaluate contactor sequencing, carbon replacement timing and frequency, media depth, backwash operation, carbon utilization, and N+1 operation. Historical and Phase 2 data will support estimates of carbon replacement requirements and development of operating strategies for higher-capacity conditions.
b. Intermediate Pump Station. KMS will evaluate Intermediate Pump performance at representative and proposed higher-flow conditions. The evaluation will define available capacity and operating limitations and identify modifications required to support increased SWTP production.
c. Up to one week of on-site testing with two engineers from the Plummer/KMS team are allocated for this task with KMS leading the team and the Plummer engineer completing the sampling, data collection, and compilation of data.

Task 1208 – Integrated SWTP Performance Demonstration
GSWMRO.1208.0020

This task is part of the stress testing presented in Phase 1.

1208.1 Integrated Field Testing. KMS will attend and lead the Plummer/KMS team to conduct up to one week of integrated SWTP testing with SJRA Operations at higher-production conditions selected from unit-process testing and will be defined further in the Protocol based on unit process testing. Plummer will support KMS similar to MF field testing sampling and compiling data. In general, the Plummer/KMS team is seeking to test the following:

a. Integrated SWTP Field Testing. Testing will demonstrate concurrent pretreatment, MF, and GAC operation and evaluate interactions with pumping, backwash, recycle and residuals handling, chemical systems, storage, instrumentation, and controls during representative operating cycles.
b. Capacity and Redundancy Demonstration. KMS will evaluate hydraulic stability, process control, equipment performance, alarms, operator intervention, and supporting systems at increased production. Final assessment of ancillaries beyond the field demonstration will be performed by the Plummer Team.

Task 1209 – Re-Rating Alternatives and OPCC
GSWMRO.12099

1209.1 Re-Rating Capacity, Phasing, and Alternative Development. KMS will prepare complete set of re-rating alternatives for Project which will identify all possible options, including any modifications to ancillaries that were identified by Plummer. KMS will prepare them in a tabular method with the following

supporting documents for Plummer to create the OPCC/Operating costs and work with KMS to prepare each of the alternatives into a set of options to attain a given capacity target. The work product by KMS is expected to consist of a set of the tabular list, descriptions of major components of each – identifying capital or cost elements, markups for the MF and GAC projects or modifications, interrelationships, risks, and the capacity target for each. The following items are part of the development of the Re-Rating Alternatives:

a. Integrated Capacity Evaluation. KMS will integrate unit-process and whole-plant results to define sustainable net production, redundancy requirements, water-quality limits, and operating constraints.

b. Ancillary System Impacts. Plummer will identify available capacity, operating changes, and improvements required for pumping, backwash and recycle, residuals handling, chemical feed, storage, instrumentation, and other supporting systems. (ancillaries by Plummer). Plummer will identify controls changes for KMS for the SWTP elements which Plummer is responsible for and provide those to part c.

c. SCADA and Controls Evaluation. KMS will review affected SCADA/PLC programming, sequences, alarms, setpoints, instrumentation, and HMI functions. Detailed programming and HMI modifications are not included – an overall list of changes will be included in the TM.

d. Capacity Alternatives and Phasing. KMS will develop a draft engineering framework for potential SWTP re-rating alternatives based on demonstrated performance. Where supported by testing, KMS will identify intermediate and ultimate capacity increments that allow SJRA to phase re-rating or improvements rather than implement a single maximum-capacity alternative. The draft will be supplied to Plummer, and the final version will be coordinated by the Team.

e. Re-Rating Framework. KMS will define feasible re-rating paths based on demonstrated capacity, required redundancy, water-quality performance, ancillary-system impacts, operating changes, and required rehabilitations/replacements. Results will establish the technical basis for comparison and selection of re-rating alternatives under Task 1211. Plummer will prepare a tool for combining, selecting and combining alternatives into projects associated with a defined capacity with SJRA. KMS will review the tool selection process.

f. Results Documentation: KMS will document the results, findings and recommendations in TM2

g. KMS will recommend a re-rating strategy, target or phased capacities, required improvements, implementation sequence, and regulatory path for Phase 3 in the draft deliverables.

h. KMS will develop graphics as part of this task for Workshop 5.

1209.2 OPCC and Operating Cost Development.

a. Plummer will prepare an Opinion of Probable Construction Cost (OPCC) for each feasible re-rating alternative and applicable capacity phase. The OPCCs will be prepared as AACE Class 4 estimates based on the level of project definition available during Phase 2. Level of effort is based on the assumptions provided in the Assumptions Section of this scope. Engineering, permitting, construction-phase services, escalation, land, financing, and other owner costs will be identified separately and excluded unless stated otherwise by Plummer.

b. KMS will document the estimate basis, assumptions, allowances, exclusions for the MF and GAC alternatives. KMS will provide costs for MF and GAC for the Plummer Team. KMS will not provide costs for any pump stations (e.g. GAC Backwash or MF Backwash) but will develop markups of As-Built drawings for Plummer to prepare the costs as part of Task 1209.1.

c. Re-rating alternatives and OPCCs will be presented and discussed in a workshop to discuss and determine a preferred alternative that will be summarized in TM2.

d. Plummer/KMS will prepare relative operating costs to compare alternatives. Relative costs will evaluate changes in chemical and power consumption, there is an assumption that there are other operations costs that do not change between alternatives, those will not be quantified. SJRA will provide unit costs for evaluation. It is expected that Plummer will develop the comparison/summary calculation sheets, and KMS will work with Plummer to populate and review for accuracy.

1209.3 Workshop 5 – Rerating Alternatives. KMS will present and attend at the rerating workshop. KMS will prepare the slides in the Re-Rating Alternatives and Preliminary Capacity Phasing Recommendation. Plummer will lead the alternatives evaluation and selection process in the meeting and present the OPCC and Operating Cost evaluations. KMS will present or support costs as requested by Plummer. Time for coordination, communication for the workshop preparation are included in Task 1202.2.

Deliverables:

1. *Draft Re-Rating Alternatives*

Workshop:

1. *Workshop No. 5 – Re-Rating Alternatives*

Task 1210 – Disinfection Concentration-Time (CT) Evaluation and Re-Rating (Lump Sum)
GSWMRO.1210.0020

Task 1210.1 CT Study review. KMS has allocated 4 hours to review the results of the CT evaluation prepared by Plummer. Primary purpose is to ensure coordination with MF, GAC, and ISWTP as well as for relevance/applicability to the Re-Rating alternatives.

Task 1211 – SWTP Re-rating Technical Memorandum 2
GSWMRO.1211.0020

1211.1 TM2 Preparation. KMS will prepare the portions identified in draft for TM2 to summarize Tasks 1202 through 1210 and recommendations for Phase 3. Coordination with Sharepoint and Plummer is as described in previous tasks, and coordination time is included in the PM Task.

a. KMS will support production of the draft and then edit the final and incorporate answers to consolidated set of SJRA comments.
b. The TM is assigned for each author:
    i. Executive Summary (Plummer w/KMS review)
    ii. Introduction & Phase 2 Objectives (Plummer w/KMS review)
    iii. TCEQ Coordination (Plummer)
    iv. Water Quality and SWTP Sampling Summary (Plummer w/ KMS review)
    v. Disinfection Concentration-Time Evaluation (Plummer)
    vi. Stress Testing and Results
        1. Jar Test & Pretreatment Testing and Results (Plummer w/KMS review)
        2. Microfiltration System Testing and Results (KMS)
        3. GAC and Intermediate/Backwash Pumping Testing and Results (KMS)
        4. Integrated SWTP Testing and Results (KMS)
    vii. Re-Rating Alternatives and OPCC's (KMS Re-Rating, Plummer all costs)

viii. Recommended Alternatives (KMS first draft, Plummer finalize)

ix. Conclusions and Recommended Path Forward (Plummer w/KMS review)

1211.2. Virtual Workshop 6 – Review of TM2. KMS will prepare for and attend one workshop to review the comments by SJRA of the TM. This is anticipated to be a 2-hour virtual meeting with limited presentation of new material. KMS will prepare slides for the questions that are related to KMS scope areas or the overall re-rating. Time for coordination, communication for the workshop preparation are included in Task 1202.2.

Deliverables:

1. *SWTP Re-rating Technical Memorandum 2 Draft, production by Plummer*
2. *SWTP Re-rating Technical Memorandum 2 Final, production by Plummer*

Workshops:

2. *Workshop No. 7 - Draft Technical Memorandum Review Workshop (Virtual)*

Task 1213 – CT Study for TCEQ Submittal (cost-plus)
GSWMRO.1213.0020

1213.1 Twenty-eight (28) hours were allocated for additional permitting service or review. KMS will coordinate with project manager for this work.

Task 1214 – Additional Testing and Evaluation (cost-plus)
GSWMRO.1214.0020

1214.1 Water Quality Testing: Additional time is allocated for water quality testing or UV254 equipment purchase. KMS will assess UV254 as a supplemental indicator of organic removal and DBP precursor loading and determine whether analysis should use an outside laboratory or a Project-purchased benchtop UV-VIS spectrophotometer. The assessment will consider cost, sampling frequency, turnaround time, operator use, and potential long-term value to SJRA. If approved by SJRA, the Project may purchase a Hach DR6000 or equivalent instrument for Phase 2 and potential long-term monitoring.

1214.2 Additional Testing and Evaluation: KMS will provide additional testing and evaluation based on initial findings. This could include additional onsite testing or evaluation of pretreatment equipment needed to implement full-scale testing. Two weeks are allocated.

1214.3 Workshop Time. Workshops are anticipated to be scheduled during testing weeks for Workshop 2, 3 and 4. The time and expenses for these workshops are captures in this task in case SJRA scheduling does not allow this efficiency.

1214.4 Additional Presentations: KMS will provide up to 2 presentations to either the GRP Review Committee and/or the SJRA BOD. Topic/content to be defined by SJRA as needed. KMS has allocated expenses and labor for 2 on-site trips and presentations with similar costs and labor hours as the Workshops.

Project Number: 0527-022-03

Date: 9/30/2026

Version: 3

EXHIBIT A

SAN JACINTO RIVER AUTHORITY

GRP MEMBRANE REPLACEMENT & OPTIMIZATION

PHASE 2 SERVICES - FEE BREAKDOWN

		Technical Lead - Karla (hrs.)	Kinser Labor ($.)	Expenses	Kinser Fee ($)
1201	**PROJECT MANAGEMENT**	**98**	**25,480**	**18,000**	**43,480**
1201.1	*Project Initiation Meeting (Workshop No. 1)*	20	5200		5200
1201.2	*Project Coordination, Management, and Communication*	78	20280	18000	38280
1202	**TCEQ COORDINATION**	**8**	**2,080**	**-**	**2,080**
1202.1	*Pre-Testing Coordination*	8	2080		2080
1202.2	*Interim Coordination*				
1202.3	*Final Phase 2 Coordination*				
1202.4	*Regulatory Documentation*				
1203	**SAMPLING PLAN AND DATA REQUESTS**	**60**	**15,600**	**-**	**15,600**
1203.1	*Sampling Process Flow Diagram*	20	5200		5200
1203.2	*Water Quality Sampling and Monitoring Plan Draft*	20	5200		5200
1203.3	*Workshop No. 2 - WQ Sampling and Monitoring Plan*				
1203.4	*Water Quality Sampling and Monitoring Plan Final*				
1203.5	*Data Requests and Reviews*	20	5200		5200
1204	**PROTOCOL FINALIZATION AND WORKSHOPS**	**164**	**42,640**	**-**	**42,640**
1204.1	*Workshop No. 3 - Unit Process Review and Upcoming Testing*	41	10660		10660
1204.2	*Workshop No. 4 - Interim Results and Upcoming Testing*	81	21060		21060
1204.3	*Workshop No. 5 - Integrated SWTP and Additional Testing*	42	10920		10920
1205	**PRETREATMENT TESTING**	**8**	**2,080**	**-**	**2,080**
1205.1	*Bench-scale Testing*	4	1040		1040
1205.2	*Pretreatment Testing*	4	1040		1040
1206	**MICROFILTRATION SYSTEM TESTING**	**180**	**46,800**	**13,600**	**60,400**
1206.1	*Short-Duration MF Testing*	40	10400	3400	13800
1206.2	*Long-Duration MF Testing*	100	26000	6800	32800
1206.3	*Cleaning Optimization*	40	10400	3400	13800
1207	**GAC SYSTEM CHARACTERIZATION AND TESTING**	**150**	**39,000**	**6,800**	**45,800**
1207.1	*GAC System Characterization*	70	18200		18200
1207.2	*GAC Profiling and Pumping Field Test*	40	10400	3400	13800
1207.3	*GAC Operating Strategies and Capacity Evaluation*	40	10400	3400	13800
1208	**INTEGRATED SWTP PERFORMANCE TESTING**	**40**	**10,400**	**3,400**	**13,800**
1208.1	*Integrated SWTP Field Testing*	40	10400	3400	13800
1208.2	*Capacity and Redundancy Demonstration*				
1209	**RE-RATING ALTERNATIVES AND OPCC**	**146**	**37,960**	**2,000**	**39,960**
1209.1	*Re-Rating and Phasing Alternatives Development*	80	20800		20800
1209.2	*OPCC and Relative Operating Cost Development*	40	10400		10400
1209.3	*Workshop No. 6 – Re-Rating Alternatives and OPCC*	26	6760	2000	8760
1210	**DISINFECTION CT EVALUATION AND RE-RATING**	**4**	**1,040**	**-**	**1,040**
1210.1	*CT Alternatives Evaluation*	4	1040		1040
1210.2	*CT Calculations*		0		0
1210.3	*Workshop No. 7 - CT Alternatives*		0		0
1211	**SWTP RE-RATING TECHNICAL MEMORANDUM 2**	**134**	**34,840**	**-**	**34,840**
1211.1	*Draft Technical Memorandum Preparation*	100	26000		26000
1211.2	*Workshop No. 8 - TM2*	14	3640	0	3640
1211.3	*Final Technical Memorandum*	20	5200		5200
1212	**ADDITIONAL TESTING**	**220**	**57,200**	**18,000**	**75,200**
1212.1	*Water Quality Testing*	40	10400		10400
1212.2	*Instrumentation*				
1212.3	*Additional Testing and Evaluation*	128	33280	14000	47280
1212.4	*Additional Presentations*	52	13520	4000	17520
1213	**CT STUDY FOR TCEQ SUBMITTAL**	**28**	**7,280**	**-**	**7,280**
1213.1	*Draft Updated Study*	8	2080		2080
1213.2	*Additional TCEQ Coordination*	20	5200		5200
1213.3	*Final CT Study and TCEQ Submittal*				
	TOTAL BASIC SERVICES	**1,240**	**322,400**	**61,800**	**384,200**

1320 Wilfred Drive
Orlando, FL 32803
Phone: 407.219.4454

Wekiva Project Number: 26-369

September 2, 2026

Mary Portillo, PE, PMP
Principal
Plummer
12500 San Pedro Ave, Suite 401
San Antonio, Texas 78216

Re: Proposal for Structural Engineering Services
San Jacinto River Authority (SJRA) Membrane Project Phase 2
Lake Conroe, Texas

Ms. Portillo:

Wekiva Engineering, LLC (Wekiva) is pleased to submit this proposal to provide structural engineering services to Plummer, Inc. (Plummer) for the above referenced project. It is our understanding that the project is currently in Phase 2 of the project which will involve testing and treatment alternatives analysis.

Scope of Services

Wekiva proposes the following work tasks:

Task 1: Assist Plummer in Preparation of OPCC: Wekiva staff will assist Plummer in the preparation of an opinion of probable cost of construction (OPCC). This will involve attending virtual meetings as needed and providing conceptual structural design in order to develop structural element thicknesses, sizes, etc. Wekiva will provide OPCC costs for these structural elements that are needed to accommodate the proposed membrane skid or other modifications and improvements that are proposed.

Cost and Schedule

Wekiva proposes to undertake the work described above on a time and expense fee basis for a not-to-exceed price of $7,000. The work will be billed using the hourly rates shown below.

Classification	Billable Rate
Principal	$233.63
Project Engineer	$172.52
Engineer	$136.58
Drafting	$117.60
Clerical	$64.70

Terms and Conditions

Wekiva will begin work immediately upon your notice to proceed. We will issue monthly invoices for the work accomplished during the calendar month. We appreciate the opportunity to submit this proposal to Plummer and we look forward to a successful collaboration on this project. If you have any questions or need further information, please call.

Sincerely,

John Sobczak, P.E.
Member

SJRA
SAN JACINTO RIVER AUTHORITY

Board Communication

Item No.	Agenda Item	Date
7.2	Consider authorizing the General Manager to execute a Professional Services Agreement with Weston Solutions, Inc., for final design for the Lift Station No. 24 Improvements Project for the Woodlands Division.	10/22/2026

BACKGROUND INFORMATION

Firm Name: Weston Solutions, Inc.

Project: Lift Station No. 24 Improvements

Type of Agreement: Professional Services Agreement (Contract No. 26-0055)

Project Description/Justification:

The Lift Station No. 24 Improvements project includes reconfiguration of the existing Lift Station No. 24 (LS24) site to mitigate the effects of future flooding. The current LS 24 site includes two wet well lift stations (LS 24A installed in 1999; LS 24B installed in 2004), and a control/generator building. During Hurricane Harvey in 2017, the entire site flooded with a water depth of approximately 4 feet. In 2024, federal funding became available to allow for reconfiguration/improvements to mitigate the effects of future flooding. The proposed improvements are anticipated to include the decommissioning and demolition of LS 24A to centralize the pumping system, demolition of the existing control/generator building including all controls, PLC panels and electrical components, construction of a new elevated control/generator platform with new controls, PLC panels, and electrical components at a higher elevation, replacement of pumps at LS 24B to address capacity and regulatory requirements, and reconfiguration of piping and valves and installation of a flow meter onsite. The diesel generator that was previously replaced after the flood event will be relocated from the existing building to the new platform. Preliminary engineering was previously performed by Weston Solutions, Inc. The scope of the proposed Professional Services Agreement with Weston Solutions, Inc., includes final design and procurement phase assistance.

Key Deliverable(s):	Due Date(s):
60% Design Submittal	January 29, 2027
90% Design Submittal	April 27, 2027
100% Design Submittal	June 24, 2027

Type of Compensation/Amount: Lump Sum/$224,664.74

Total Amount: $224,664.74

Cost Type: Engineering

Anticipated Completion Date: October 22, 2027

FUNDING SOURCE: R&R Funds, Federal Grant

ATTACHMENTS: Map, Professional Services Agreement, Scope, Schedule, Level of Effort

RECOMMENDED ACTION

Authorize the General Manager to execute a Professional Services Agreement with Weston Solutions, Inc., in the amount of $224,664.74 for final design for the Lift Station No. 24 Improvements Project for the Woodlands Division. Sufficient funds were budgeted and are available in Fiscal Year 2027 for this purpose.

Lift Station No. 24 Improvements

0 200 400 Feet

N

SJRA
SAN JACINTO RIVER AUTHORITY

Document Location: B:\Requests\Woodlands\G.Lushbaugh\Lift Station No. 24 Improvements\Lift Station No 24 Improvements.aprx

Document Date: 7/30/2026 2:34 PM ecoleman

SJRA
SAN JACINTO RIVER AUTHORITY

General & Administrative Division
Procurement Department
1577 Dam Site Rd.
Conroe, Texas 77304

PROFESSIONAL SERVICES AGREEMENT

Contract #26-0055

Lift Station No. 24 Improvements Final Design and Procurement Phase Assistance

PROFESSIONAL SERVICES AGREEMENT
CONTRACT NO. 26-0055

This Professional Services Agreement (the "Agreement") is made and entered into by and between the San Jacinto River Authority, a conservation and reclamation district of the State of Texas, ("SJRA") with general and administration offices located at 1577 Dam Site Road, Conroe, Texas 77304,

and

Weston Solutions, Inc., a corporation organized under the laws of the State of Pennsylvania, ("CONSULTANT") with principal offices located at 2929 Briarpark Drive, Suite 175, Houston, TX 77042.

SJRA and CONSULTANT are sometimes referred to herein collectively as the "Parties" or individually as a "Party."

The Parties hereby agree as follows:

ARTICLE 1 – SCOPE OF SERVICES

1.1 CONSULTANT agrees to perform professional services (the "Services") related to **Lift Station No. 24 Improvements** as are requested from time to time by SJRA. **Exhibit A**, which is attached hereto and incorporated herein by reference, shall be used to define scope of work.

1.2 The Parties agree that nothing in this Agreement shall prohibit the Parties, or either of them, from entering into agreements other than this Agreement for professional services or other work.

ARTICLE 2 – TERM OF AGREEMENT

2.1 The term of this Agreement commences on the Executed Date and continues without interruption through March 1, 2028. If it's determined that additional time is required to complete the services, SJRA Procurement Manager may, but is not obligated to, in their discretion, execute an amendment to grant up to an additional six (6) months of time so long the amount of the consideration does not increase. SJRA may terminate this Agreement for convenience, and either Party may terminate this Agreement for cause, in each case as provided in Article 12.

2.2 Without limiting the generality of the foregoing Paragraph 2.1, Consultant's obligations under Articles 5, 6, 8, 9, 10, 11, 18, 19 and 20 shall survive the expiration or termination of this Agreement.

ARTICLE 3 – COMPENSATION AND PAYMENT

3.1 SJRA agrees to pay CONSULTANT, and CONSULTANT agrees to accept, as full and complete compensation for Services properly performed by CONSULTANT in accordance with this Agreement, the rates and charges agreed upon. **Exhibit B**, which is attached hereto and incorporated herein by reference, shall be used to define compensation.

3.2 On or before the tenth day of each calendar month, CONSULTANT shall submit an invoice to SJRA Accounts Payable at AP@sjra.net, together with backup documentation required by SJRA and releases and waivers in forms acceptable to SJRA, covering all Services performed by CONSULTANT and its subconsultants, subcontractors and suppliers during the preceding calendar month. CONSULTANT shall separately itemize on each invoice: (i) payment sought, (ii) the amount budgeted for each service, (iii) the amount of payment requested pursuant to services, (iv) the amount previously paid pursuant to services, (v) descriptions of services performed during the prior month, and (vi) the total payment requested by such invoice. SJRA shall pay the amount it agrees to be due within forty-five (45) days after receipt of such complete invoice and backup documentation. SJRA shall notify CONSULTANT in writing of a disputed amount in an invoice within twenty-one (21) days of receipt. Such notice shall include a detailed statement of the amount of the invoice which is disputed.

3.3 SJRA shall have the right but not the obligation to withhold, offset, or reduce all or part of any payment requested in any invoice to such extent as may be necessary, but in no event greater than 110% of the disputed amount, on account of:

(a) Services that are not in compliance with this Agreement or any failure of CONSULTANT to perform Services in accordance with the provisions of this Agreement;

(b) third party suits, stop notices, claims or liens arising out of Services performed for which CONSULTANT is responsible pursuant to this Agreement and asserted or filed against SJRA or any of its property or portion thereof or improvements thereon provided that CONSULTANT fails to provide SJRA with sufficient evidence that CONSULTANT's insurance is adequate or shall cover the claim(s);

(c) uninsured damage to any INDEMNITEE (hereinafter defined) which results from CONSULTANT's failure to obtain or maintain the insurance required by this Agreement or from any action or inaction by CONSULTANT or any of its subcontractors, subconsultants, or suppliers which excuses any insurer from liability for any loss or claim which would, but for such action or inaction, be covered by insurance; or

(d) any failure of CONSULTANT to pay any subcontractor, subconsultant, or supplier of CONSULTANT the correct, undisputed, and contractually obligated amount for acceptable services received and for acceptable supplies received. CONSULTANT will not include in its billings to SJRA any amount in a subcontractor or supplier invoice which it has not paid or does not intend to pay within the terms and conditions of the applicable subcontract agreement or supplier purchase order.

Any failure by SJRA to exercise its right to withhold all or any part of payment requested in any invoice as provided in this Paragraph 3.3 shall not be and shall not be construed as (i) a waiver of SJRA's right to do so in the future, or (ii) evidence that any of the circumstances identified in Subparagraphs 3.3(a) through (d) above have not occurred. When the above reasons for withholding payment are remedied or no longer exist, CONSULTANT shall resubmit an invoice for the withheld amounts. Payment will be made within thirty (30) calendar days of receipt by SJRA of an approved invoice, subject to Paragraph 3.4 below.

3.4 CONSULTANT agrees to pay in full (less any applicable retainage) as soon as reasonably practicable, but in no event later than thirty (30) days following payment from SJRA, all subcontractors, subconsultants, and any other persons or entities supplying labor, supplies, materials, or equipment in connection with Services that are owed payment by CONSULTANT out of such payment made to CONSULTANT by SJRA. Further, provided that SJRA has paid CONSULTANT in accordance with the terms of this Agreement, **CONSULTANT SHALL DEFEND AND INDEMNIFY SJRA FROM AND AGAINST ANY CLAIMS FOR PAYMENT ASSERTED OR FILED BY ANY SUCH PERSON OR ENTITY AGAINST SJRA, ITS PROJECT OR PROPERTY OR CONSULTANT.**

3.5 Non-Appropriation: All funds for payment by SJRA under this Agreement are subject to the availability of an annual appropriation for this purpose by SJRA. In the event of non-appropriation of funds by the Board of Directors of SJRA for the services provided under the Agreement, SJRA will terminate the Agreement, without termination charge or other liability, on the last day of the then-current fiscal year or when the appropriation made for the then-current year for the services covered by this Agreement is spent, whichever event occurs first (the "Non-Appropriation Date"). If at any time funds are not appropriated for the continuance of this Agreement, cancellation shall be accepted by the CONSULTANT on thirty (30) days prior written notice, but failure to give such notice shall be of no effect and SJRA shall not be obligated under this Agreement beyond the Non-Appropriation Date.

ARTICLE 4 – STANDARD OF CARE; COORDINATION OF SERVICES; SAFETY; COST ESTIMATES; LEGAL COMPLIANCE; THIRD PARTY REVIEW

4.1 CONSULTANT shall perform, supervise and direct the Services, and otherwise discharge its obligations under this Agreement: (a) with the professional skill and care ordinarily provided by competent engineers practicing under the same or similar circumstances and professional license; and (b) as expeditiously as is prudent considering

the ordinary professional skill and care of a competent engineer (collectively, the CONSULTANT's "Standard of Care").

4.2 Consistent with its Standard of Care, CONSULTANT shall (a) perform its Services in accordance with all applicable laws, codes, ordinances and regulations; (b) perform its Services in an efficient manner; and (c) keep SJRA apprised of the status of Services, coordinate its activities with SJRA, and accommodate other activities of SJRA at sites that the Services impact. CONSULTANT shall designate an authorized representative to be available for consultation, assistance, and coordination of activities.

4.3 To the extent the Scope of Work under this agreement includes or involves construction activities, the following provisions shall apply: As between SJRA and CONSULTANT, the CONSULTANT shall be solely responsible for its own activities at sites including the safety of its employees, and that of its subconsultants, subcontractors and suppliers. Construction contractors of SJRA shall have sole responsibility for providing materials, means, and methods of construction, for controlling their individual work areas and safety of said areas for all persons, and for taking all appropriate steps to ensure the quality of their work and the safety of their employees and of the public in connection with their performance of work or services provided under contracts with SJRA. Without assuming any control over, responsibility for or liability whatsoever with respect to the construction contractor obligations of the foregoing sentence, CONSULTANT shall notify SJRA if it observes violations of safety regulations or ordinances or quality of work deficiencies by SJRA's construction contractors. CONSULTANT shall comply with the site safety program and rules established by the construction contractors.

4.4 To the extent the Scope of Work under this agreement includes or involves construction activities, the following provisions shall apply: To the extent that CONSULTANT provides to SJRA any estimate of costs associated with construction, any such estimate shall be developed in accordance with CONSULTANT's Standard of Care, but it is recognized by the Parties that neither CONSULTANT nor SJRA has control over the cost of the labor, materials, or equipment, over a construction contractor's methods of determining bid prices, or over competitive bidding, market, or negotiating conditions. Accordingly, CONSULTANT cannot and does not warrant or represent that bids or negotiated prices will not vary from SJRA's budget for the project or from any estimate of the cost of work or evaluation prepared or agreed to by CONSULTANT.

4.5 CONSULTANT hereby agrees that the following terms, conditions, verifications, certifications, and representations apply to and are incorporated into this Agreement for all purposes, and CONSULTANT shall deliver to SJRA signed and notarized verifications prior to commencement of any Services:

(a) With respect to providing Services hereunder, CONSULTANT shall comply with any applicable Equal Employment Opportunity and/or Affirmative Action ordinances, rules, or regulations during the term of this Agreement.

(b) Pursuant to Texas Local Government Code Chapter 176, CONSULTANT shall submit a signed Texas Ethics Commission ("TEC") Conflict of Interest Questionnaire ("CIQ") at the time CONSULTANT submits this signed Agreement to SJRA. TEC Form CIQ and information related to same may be obtained from TEC website by visiting https://www.ethics.state.tx.us/ forms/conflict/. If CONSULTANT certifies that there are no Conflicts of Interest, CONSULTANT shall indicate so by writing name of CONSULTANT's firm and "No Conflicts" on the TEC Form CIQ.

(c) If CONSULTANT is a privately held entity, then pursuant to Texas Government Code Section 2252.908 and the rules promulgated thereunder by the TEC, CONSULTANT shall submit a completed and signed TEC Form 1295 with a certificate number assigned by the TEC to SJRA at the time CONSULTANT submits this signed Agreement to SJRA. TEC Form 1295 and information related to same may be obtained from TEC website by visiting https://www.ethics.state.tx.us/filinginfo/1295/. CONSULTANT agrees and acknowledges that this Agreement shall be of no force and effect unless and until CONSULTANT has submitted said form to SJRA, if and to the extent such form is required under Government Code § 2252.908 and the rules promulgated thereunder by the TEC.

(d) As required by Chapter 2271, Texas Government Code, CONSULTANT hereby verifies that CONSULTANT, including a wholly owned subsidiary, majority-owned subsidiary, parent company or affiliate of the same, does not boycott Israel and will not boycott Israel through the term of this Agreement. The term "boycott Israel" in this Paragraph has the meaning assigned by Section 2271.001, Texas Government Code, which incorporates the definition provided in Section 808.001, Texas Government Code, as amended.

(e) Pursuant to Chapter 2252, Texas Government Code, CONSULTANT represents and certifies that, at the time of execution of this Agreement, neither CONSULTANT, nor any wholly owned subsidiary, majority-owned subsidiary, parent company or affiliate of the same, is engaged in business with Iran, Sudan, or any terrorist organization, and is a company listed by the Texas Comptroller of Public Accounts under Sections 2270.0201 or 2252.153 of the Texas Government Code.

(f) As required by Chapter 2276, Texas Government Code (as added by Senate Bill 13, 87th Texas Legislature, Regular Session), as amended, CONSULTANT hereby verifies that CONSULTANT, including any wholly owned subsidiary, majority-owned subsidiary, parent company or affiliate of the same, does not boycott energy companies, and will not boycott energy companies during the term of this Agreement. The term "boycott energy companies" in this Paragraph shall have the meaning assigned to the term "boycott energy company" in Section 809.001, Texas Government Code, as amended.

(g) As required by Section 2274.002, Texas Government Code (as added by Senate Bill 19, 87th Texas Legislature, Regular Session, "SB 19"), as amended, CONSULTANT hereby verifies that CONSULTANT, including any wholly owned subsidiary, majority-owned subsidiary, parent company or affiliate of the same, (i) does not have a practice, policy, guidance or directive that discriminates against a firearm entity or firearm trade association, and (ii) will not discriminate against a firearm entity or firearm trade association during the term of this Agreement. The term "discriminate against a firearm entity or trade association" in this Paragraph shall have the meaning assigned to such term in Section 2274.001(3), Texas Government Code (as added by SB 19), as amended.

(h) Pursuant to Chapter 2274 of the Texas Government Code (as added by Senate Bill 2116, 87th Legislature, Regular Session), as amended, and to the extent this Agreement grants to CONSULTANT direct or remote access to the control of critical infrastructure, excluding access specifically allowed for product warranty and support, CONSULTANT verifies that neither CONSULTANT, including any wholly owned subsidiary, majority-owned subsidiary, parent company, or affiliate of the same, nor any of its sub-contractors are: (i) owned or controlled by (a) individuals who are citizens of China, Iran, North Korea, Russia, or a designated country; or (b) a company or other entity, including a governmental entity, that is owned or controlled by citizens of or is directly controlled by the government of China, Iran, North Korea, Russia, or a designated country; or (ii) headquartered in China, Iran, North Korea, Russia or a designated country. The term "designated country" in this Paragraph means a country designated by the Governor as a threat to critical infrastructure under Section 2274.0103, Texas Government Code. The term "critical infrastructure" in this Paragraph shall have the meaning assigned to such term in Section 2274.0101, Texas Government Code.

4.6 CONSULTANT acknowledges and agrees that projects of SJRA may be subject to review and approval by other third parties. Accordingly, as and when requested by SJRA, CONSULTANT shall submit such information and cooperate with the other third parties to the extent necessary to undergo any such review or obtain any such approval.

4.7 CONSULTANT does not represent Work Product (as defined herein) to be suitable for reuse on any other project or for any other purpose(s). If SJRA reuses any Work Product without CONSULTANT's specific written verification or adaptation, such reuse will be at the risk of SJRA, without liability to CONSULTANT.

ARTICLE 5 – COST RECORDS

5.1 CONSULTANT shall maintain records and books in accordance with generally accepted accounting principles and practices. For Services provided by CONSULTANT under cost reimbursable, time and material or unit pricing, during the period of this

Agreement and for five (5) years thereafter, CONSULTANT shall maintain records of direct costs for which SJRA is charged. SJRA shall at all reasonable times have access to such records for the purpose of inspecting, auditing, verifying, or copying the same, or making extracts therefrom. SJRA's audit rights for fixed unit rate or time and materials agreements shall extend to review of records for the purpose of substantiating man-hours worked, units employed, and third-party charges only. Except to the extent audit rights are granted to SJRA by applicable law, SJRA shall have no audit rights with respect to the portion Services compensated on a lump sum basis.

ARTICLE 6 – OWNERSHIP OF WORK PRODUCT AND TECHNOLOGY

6.1 All studies, plans, reports, drawings, specifications, cost estimates, software, computations, and other information and documents prepared by CONSULTANT, its subconsultants, subcontractors, and/or suppliers, in connection with Services or any project of SJRA are and shall remain SJRA's property upon creation (collectively, "Work Product"); provided, however, that Work Product shall not include pre-existing proprietary information of CONSULTANT, its subconsultants, subcontractors, and/or suppliers ("CONSULTANT Proprietary Information"). To this end, CONSULTANT agrees to and does hereby assign, grant, transfer, and convey to SJRA, its successors and assigns, CONSULTANT's entire right, title, interest and ownership in and to such Work Product, including, without limitation, the right to secure copyright registration. CONSULTANT confirms that SJRA and its successors and assigns shall own CONSULTANT's right, title and interest in and to, including without limitation the right to use, reproduce, distribute (whether by sale, rental, lease or lending, or by other transfer of ownership), to perform publicly, and to display, all such Work Product, whether or not such Work Product constitutes a "work made for hire" as defined in 17 U.S.C. Section 201(b). In addition, CONSULTANT hereby grants SJRA a fully paid-up, royalty free, perpetual, assignable, non-exclusive license to use, copy, modify, create derivative works from and distribute to third parties CONSULTANT Proprietary Information in connection with SJRA's exercise of its rights in the Work Product, operation, maintenance, repair, renovation, expansion, replacement, and modification of projects of SJRA or otherwise in connection with property or projects in which SJRA has an interest (whether by SJRA or a third party). CONSULTANT shall obtain other assignments, confirmations, and licenses substantially similar to the provisions of this Paragraph from all of its subconsultants, subcontractors, and suppliers. Work Product is to be used by CONSULTANT only with respect to the project in connection with which such Work Product was created and is not to be used on any other project. CONSULTANT and its subconsultants, subcontractors, and suppliers are granted a limited, nonexclusive, non-transferable, revocable license during the term of their respective agreements under which each is obligated to perform Services to use and reproduce applicable portions of the Work Product appropriate to and for use in the execution of Services. Submission or distribution to comply with official regulatory requirements for other purposes in connection with Services is not to be construed as publication in derogation of SJRA's copyright or other reserved rights. CONSULTANT agrees that all Work Product will be maintained according to the provisions of the Public Information Act, Chapter 552, Texas Government Code, and the

Local Government Records Act, Chapters 201 through 205, Texas Local Government Code, each as amended. CONSULTANT shall deliver all copies of the Work Product to SJRA upon the earliest to occur of (i) SJRA's request, (ii) completion of Services in connection with which Work Product was created, or (iii) termination of this Agreement. CONSULTANT is entitled to retain copies of Work Product for its permanent project records.

6.2 CONSULTANT agrees that all information provided by SJRA in connection with Services shall be considered and kept confidential ("Confidential Information"), and shall not be reproduced, transmitted, used, or disclosed by CONSULTANT without the prior written consent of SJRA, except as may be necessary for CONSULTANT to fulfill its obligations hereunder; provided, however, that such obligation to keep confidential such Confidential Information shall not apply to any information, or portion thereof, that:

(a) was at the time of receipt by CONSULTANT otherwise known by CONSULTANT by proper means;

(b) has been published or is otherwise within the public domain, or is generally known to the public at the time of its disclosure to CONSULTANT;

(c) subsequently is developed independently by CONSULTANT, by a person having nothing to do with the performance of this Agreement and who did not learn about any such information as a result of CONSULTANT's being a Party to this Agreement;

(d) becomes known or available to CONSULTANT from a source other than SJRA and without breach of this Agreement by CONSULTANT or any other impropriety of CONSULTANT;

(e) enters the public domain without breach of the Agreement by or other impropriety of CONSULTANT;

(f) becomes available to CONSULTANT by inspection or analysis of products available in the market;

(g) is disclosed with the prior written approval of SJRA;

(h) was exchanged between SJRA and CONSULTANT and ten (10) years have subsequently elapsed since such exchange; or

(i) is disclosed to comply with the Texas Public Information Act or in response to a court order to comply with the requirement of a government agency.

6.3 CONSULTANT shall not be liable for the inadvertent or accidental disclosure of Confidential Information, if such disclosure occurs despite the exercise of at least the same

degree of care as CONSULTANT normally takes to preserve and safeguard its own proprietary or confidential information.

6.4 CONSULTANT will advise SJRA of any patents or proprietary rights and any royalties, licenses, or other charges which CONSULTANT knows or should know in the exercise of its Standard of Care impacts any design provided by CONSULTANT in connection with any Services, and obtain SJRA's prior written approval before proceeding with such Services. CONSULTANT shall not perform patent searches or evaluation of claims, but will assist SJRA in this regard if requested, pursuant to a written change order in accordance with Paragraph 12.1, below. There will be no charge for CONSULTANT's existing patents.

ARTICLE 7 – INDEPENDENT CONTRACTOR RELATIONSHIP

7.1 In the performance of Services hereunder, CONSULTANT shall be an independent contractor with the authority to control and direct the performance of the details of Services and its own means and methods. CONSULTANT shall not be considered a partner, affiliate, agent, or employee of SJRA and shall in no way have any authority to bind SJRA to any obligation.

ARTICLE 8 – WARRANTY PERIOD; GUARANTEES

8.1 If within a period of one (1) year following completion of Services, it is discovered that such Services were not performed in accordance with CONSULTANT's Standard of Care or the Contract Documents, SJRA, in its sole discretion, may: (1) direct CONSULTANT to re-perform and CONSULTANT shall re-perform such Services at its own expense, and as expediently or in the manner required for SJRA's needs; or (2) retain such other consultant or consultants as necessary to perform such corrective services, and CONSULTANT agrees to pay SJRA's costs associated with having such other consultant or consultants perform such corrective services, and any other damages incurred by SJRA as a result of such default. The obligations of CONSULTANT under this Paragraph 8.1 are in addition to other rights and remedies of SJRA available to it pursuant to this Agreement or applicable law.

8.2 CONSULTANT agrees to assign SJRA the warranty or guarantee of any subconsultant, subcontractor, supplier or manufacturer of items of services, supplies, machinery, equipment, materials, or products provided by CONSULTANT hereunder and cooperate and assist SJRA in SJRA's enforcement thereof. CONSULTANT's responsibility with respect thereto is limited to such assignment, cooperation, and assistance.

ARTICLE 9 – INDEMNIFICATION

9.1 TO THE FULLEST EXTENT PERMITTED BY LAW, CONSULTANT SHALL INDEMNIFY AND HOLD HARMLESS SJRA AND ITS BOARD, DIRECTORS, OFFICERS, AGENTS, REPRESENTATIVES AND EMPLOYEES (EACH AN "INDEMNITEE" AND COLLECTIVELY,

THE "INDEMNITEES"), FROM AND AGAINST CLAIMS, LOSSES, DAMAGES, DEMANDS, SUITS, CAUSES OF ACTION, SETTLEMENTS, LIABILITIES, COSTS, FINES, JUDGMENTS AND EXPENSES (INCLUDING, WITHOUT LIMITATION, REASONABLE AND NECESSARY COURT COSTS, EXPERTS' FEES, ATTORNEYS' FEES AND TO THE EXTENT ALLOWED BY LAW, EXPERTS' FEES) (COLLECTIVELY, "LOSSES"), INCLUDING WITHOUT LIMITATION THOSE BROUGHT AGAINST OR INCURRED OR SUFFERED BY ANY ONE OR MORE OF THE INDEMNITEES AND THOSE ARISING IN FAVOR OF OR BROUGHT BY ANY THIRD PARTY, TO THE EXTENT CAUSED BY OR RESULTING FROM AN ACT OF NEGLIGENCE, INTENTIONAL TORT, INTELLECTUAL PROPERTY INFRINGEMENT, OR FAILURE TO PAY A SUBCONTRACTOR OR SUPPLIER, COMMITTED BY CONSULTANT, ITS AGENT, ITS CONSULTANT UNDER CONTRACT, OR ANOTHER ENTITY OVER WHICH CONSULTANT EXERCISES CONTROL, UNDER OR IN CONNECTION WITH THIS AGREEMENT, EVEN IF SUCH LOSSES ARE CAUSED IN PART BY THE NEGLIGENCE OR FAULT, BREACH OR VIOLATION OF A STATUTE, ORDINANCE, GOVERNMENTAL REGULATION, STANDARD OR RULE OR BREACH OF CONTRACT OF AN INDEMNITEE OR ANY THIRD PARTY UNDER THE CONTROL OR SUPERVISION OF AN INDEMNITEE; PROVIDED, HOWEVER, THAT CONSULTANT'S OBLIGATION TO INDEMNIFY AND HOLD HARMLESS SHALL NOT EXTEND TO THE PORTION (IF ANY) OF SUCH LOSSES THAT ARE CAUSED BY THE NEGLIGENCE OR FAULT, BREACH OR VIOLATION OF A STATUTE, ORDINANCE, GOVERNMENTAL REGULATION, STANDARD OR RULE OR BREACH OF CONTRACT OF AN INDEMNITEE OR ANY THIRD PARTY UNDER THE CONTROL OR SUPERVISION OF AN INDEMNITEE OTHER THAN CONSULTANT OR ITS AGENT OR EMPLOYEE OR SUBCONTRACTORS OF ANY TIER.

9.2 TO THE FULLEST EXTENT PERMITTED BY LAW, AND TO THE EXTENT A DEFENSE IS NOT PROVIDED FOR THE INDEMNITEES UNDER AN INSURANCE POLICY AS REQUIRED UNDER PARAGRAPH 1(F) OF EXHIBIT C (ADDITIONAL INSURED REQUIREMENT),ATTACHED HERETO AND INCORPORATED HEREIN BY REFERENCE, OR THE INDEMNITEES' ATTORNEYS' FEES ARE NOT OTHERWISE RECOVERED UNDER THE INDEMNITY PROVISION SET FORTH IN PARAGRAPH 9.1 HEREOF, CONSULTANT SHALL, UPON FINAL ADJUDICATION OF THE LOSSES AS DEFINED IN PARAGRAPH 9.1 HEREOF AND WITHIN THIRTY (30) DAYS FOLLOWING THE DATE OF A WRITTEN DEMAND, REIMBURSE THE INDEMNITEES FOR ALL REASONABLE ATTORNEYS' FEES INCURRED TO DEFEND AGAINST THE LOSSES IN PROPORTION TO CONSULTANT'S LIABILITY TO ANY THIRD PARTY FOR SUCH LOSSES.

ARTICLE 10 – LIMITATION OF LIABILITY

10.1 NEITHER PARTY HERETO SHALL BE LIABLE TO THE OTHER PARTY OR ITS AFFILIATES FOR ANY LOSS OF PROFIT, LOSS OF REVENUE, LOSS OF USE OR ANY OTHER INDIRECT, CONSEQUENTIAL OR SPECIAL DAMAGES (EXCLUDING FINES AND PENALTIES LEVIED BY A REGULATORY AGENCY), EVEN IF CAUSED BY THE SOLE OR CONCURRENT NEGLIGENCE OF A PARTY, WHETHER ACTIVE OR PASSIVE, AND EVEN IF ADVISED OF THE POSSIBILITY THEREOF.

10.2 NOTHING HEREIN SHALL BE CONSTRUED AS CREATING ANY PERSONAL LIABILITY ON THE PART OF ANY BOARD MEMBER, OFFICER, EMPLOYEE, OR AGENT OF SJRA.

ARTICLE 11 – INSURANCE

11.1 CONSULTANT shall obtain and maintain insurance as provided in **Exhibit C**, attached hereto and incorporated herein.

ARTICLE 12 – CHANGES; TERMINATION FOR CONVENIENCE; TERMINATION FOR CAUSE

12.1 SJRA may, at any time and from time to time, make written changes in the form of amendments, modifications, additions, or omissions. In the event that any such change, through no fault of CONSULTANT, shall impact CONSULTANT's compensation or schedule, then (a) such changes shall be authorized by written change order issued by SJRA and accepted by CONSULTANT, and (b) an equitable adjustment shall be made to the agreement in writing duly executed by both Parties, to reflect the change in compensation and schedule.

12.2 SJRA may for convenience terminate this Agreement, or CONSULTANT's right to perform Services under this Agreement at any time giving thirty (30) days written notice of such termination. In such event, SJRA shall have the right but not the obligation to assume all obligations and commitments that CONSULTANT may have in good faith undertaken or incurred in connection with the Services terminated, and SJRA shall pay CONSULTANT, as its sole and exclusive remedy, for Services properly performed to date of termination and for reasonable costs of closing out such Services provided SJRA has pre-approved such costs. CONSULTANT shall not be entitled to lost profit on unperformed Services or any consequential damages of any kind. Upon termination, CONSULTANT shall invoice SJRA for all Services performed by CONSULTANT prior to the date of termination which have not previously been compensated. Payment of undisputed amounts in the final invoice shall be due and payable within thirty (30) days after receipt by SJRA of such invoice and all Work Product.

12.3 This Agreement may be terminated by either Party in the event that the other Party fails to perform in accordance with its requirements and such Party does not cure such failure within ten (10) days after receipt of written notice describing such failure. In the event that SJRA terminates this Agreement for cause, CONSULTANT shall not be entitled to any compensation until final completion of the then ongoing Services and any such entitlement shall be subject to SJRA's right to offset and/or recoup all damages and costs associated with finally completing such Services. If for any reason, CONSULTANT is declared in default and/or terminated by SJRA, SJRA shall have the right, subject to Paragraph 3.3, to offset and apply any amounts which might be owed to SJRA by CONSULTANT against any earned but unpaid amounts owed to CONSULTANT by SJRA.

ARTICLE 13 – FORCE MAJEURE

13.1 Any delay in performance or non-performance of any obligation other than an obligation to make a payment as required under this Agreement, of CONSULTANT contained herein shall be excused to the extent such delay in performance or non-performance is caused by Force Majeure. "Force Majeure" shall mean fire, flood, act of God, earthquakes, extreme weather conditions, epidemic, pandemic, war, riot, civil disturbance or unrest, imposition of martial law, restrictions imposed by civil authority, loss of control of civil authority, illegal activity, extreme unreliability or failure of the utility infrastructure, failure of the US banking system, loss of access to communication systems, sabotage, terrorism, or judicial restraint, but only to the extent that such event (i) is beyond the reasonable control of and cannot be reasonably anticipated by or the effects cannot be reasonably alleviated by CONSULTANT and (ii) prevents the performance of Services.

13.2 If CONSULTANT is affected by Force Majeure, CONSULTANT shall promptly provide written notice to SJRA, explaining in detail the full particulars and the expected duration thereof. Notice will be considered prompt if delivered within five (5) days after CONSULTANT first becomes aware or should have become aware through performance in accordance with the standard of care, that the event of Force Majeure will affect the performance of Services. CONSULTANT shall use its commercially reasonable efforts to mitigate interruption or delay if it is reasonably capable of being mitigated.

ARTICLE 14 – SUCCESSORS, ASSIGNMENT AND SUBCONTRACTING

14.1 SJRA and CONSULTANT bind themselves and their successors, executors, administrators and permitted assigns to the other Party of this Agreement and to the successors, executors, administrators and permitted assigns of such other party, in respect to all covenants of this Agreement.

14.2 No right or interest in this Agreement shall be assigned by CONSULTANT or SJRA without the prior written consent of the other Party.

14.3 Prior to commencement of any part of the Services to be provided with respect to which CONSULTANT has elected to subcontract, CONSULTANT will notify SJRA in writing of the identity of the particular subcontractor, subconsultant or supplier CONSULTANT intends to employ for the performance of such part of the Services and the scope of Services it will perform. SJRA shall have the right within twenty-one (21) calendar days of such written notice to disallow CONSULTANT's employment of any particular subcontractor, subconsultant or supplier, provided that any reasonable additional costs incurred by CONSULTANT as a result of such disallowance shall be borne by SJRA. All damage, injury or loss to any property caused, directly or indirectly, in whole or in part, by CONSULTANT or any subcontractor, supplier or any person or organization directly or indirectly employed by any of them to perform or furnish any of the Services or anyone for whose acts any of them may be liable, shall be remedied by CONSULTANT (except to the extent of damage or loss attributable to errors or omissions in the drawings or specifications (unless CONSULTANT had knowledge of the error or omission or using reasonable care should have known of the error and CONSULTANT failed to report same), or to the acts or omissions of SJRA or anyone employed by SJRA, or anyone for whose acts any of them may be liable other than CONSULTANT or its agent, or employee, or subcontractors of any tier).

ARTICLE 15 – SEVERABILITY; NON-WAIVER

15.1 If any provision or portion thereof of this Agreement is deemed unenforceable or void, then such provision or portion thereof shall be deemed severed from the Agreement and the balance of the Agreement shall remain in full force and effect.

15.2 Failure by SJRA in any instance to insist upon observance or performance by CONSULTANT of any term, condition or obligation of this Agreement shall not be deemed a waiver by SJRA of any such observance or performance. No waiver by SJRA of any term, condition, obligation or breach of this Agreement will be binding upon SJRA unless in writing, and then will be for the particular instance specified in such writing only. Payment of any sum by SJRA to CONSULTANT with knowledge of any breach will not be deemed a waiver of such breach or any other breach.

ARTICLE 16 – LICENSE REQUIREMENTS

16.1 The CONSULTANT and any subconsultant shall have and maintain any licenses, registrations and certifications required by the State of Texas or recognized professional organizations governing the Services performed under this Agreement.

ARTICLE 17 – ENTIRE AGREEMENT

17.1 This Agreement contains the full and complete understanding of the Parties pertaining to their subject matter and supersede any and all prior and contemporaneous representations, negotiations, agreements or understandings between the Parties, whether written or oral. The Agreement may be modified only in writing, signed by both Parties.

ARTICLE 18 – GOVERNING LAW; VENUE

18.1 This Agreement, and its and their construction and any disputes arising out of, connected with, or relating to this Agreement shall be governed by the laws of the State of Texas, without regard to its conflicts of law principles. Venue of all dispute resolution proceedings arising out of, connected with or relating to this Agreement, shall be in Montgomery County, Texas.

ARTICLE 19 – DISPUTE RESOLUTION

19.1 In the event of any dispute arising out of or relating to this Agreement, any services which SJRA and CONSULTANT have been unable to resolve within thirty (30) days after such dispute arises, a senior representative of CONSULTANT shall meet with the General Manager of SJRA at a mutually agreed upon time and place not later than forty-five (45) days after such dispute arises to attempt to resolve such dispute. In the event such representatives are unable to resolve any such dispute within fifteen (15) days after such meeting, either Party may, by written notice to the other, submit such dispute to non-binding mediation before a mutually agreeable mediator. If the Parties are unable to agree upon a mediator within twenty (20) days after such written notice of submission to mediation, the American Arbitration Association shall be empowered to appoint a qualified mediator pursuant to the American Arbitration Association Construction Industry Mediation Rules. If the dispute is technical in nature, the mediator appointed by the American Arbitration Association shall be qualified by at least ten (10) years' experience in construction, engineering, and/or public works operations. The mediation shall be conducted within thirty (30) days of the selection or appointment of the mediator, as applicable. The mediation shall be held at a mutually agreeable location in Montgomery County, Texas. If the Parties are unable to agree on a location, the mediation shall be held at the offices of the American Arbitration Association closest to Conroe, Texas.

19.2 Any dispute arising out of or relating to this Agreement or any Services not resolved pursuant to Paragraph 19.1, shall be resolved, by litigation in a court of competent jurisdiction.

19.3 Notwithstanding the foregoing, in the event SJRA and any other consultant and/or any contractor are involved in a dispute in connection with a project for which CONSULTANT has provided Services, and SJRA, in its sole discretion, determines that CONSULTANT's participation in any dispute resolution meeting or mediation proceeding between SJRA and any such consultant and/or contractor is necessary to the resolution of such dispute, CONSULTANT agrees to attend and participate at its own cost in any such dispute resolution meeting or mediation proceeding.

19.4 If CONSULTANT brings any claim against SJRA and CONSULTANT does not prevail with respect to such claim, CONSULTANT shall be liable for all attorneys' fees and costs incurred by SJRA as a result of such claim.

ARTICLE 20 – ELECTRONIC SIGNATURES; COUNTERPARTS

20.1 This Agreement may be executed in counterparts, each of which shall be deemed an original, but all of which together shall be deemed to be one and the same agreement. A signed copy of this Agreement delivered by facsimile, email, or other means of electronic transmission shall be deemed to have the same legal effect as delivery of an original signed copy of this Agreement. Duplicate copies of duly executed and delivered counterparts of this Agreement shall be deemed to have the same full force and effect as originals and may be relied upon as such. Notwithstanding the foregoing, the Parties agree that this Agreement may be executed using electronic signatures at the option and in the discretion of SJRA, and, in such event, the provisions of the Uniform Electronic Transaction Act, Chapter 332, Texas Business and Commerce Code, as amended, and any applicable policies and procedures of SJRA regarding electronic signatures shall apply.

ARTICLE 21 – CONFIDENTIALITY

21.1 Neither CONSULTANT nor any of its subconsultants shall publish or release any publicity or public relations materials of any kind concerning or relating to this Agreement, the Services or the activities of SJRA, unless such materials have first been reviewed and approved in writing by SJRA. This provision shall not apply to mandatory reports which CONSULTANT or its subconsultants are required by law to file with governmental authorities.

EXECUTED this _____ day of _____, 20____.

SAN JACINTO RIVER AUTHORITY:

_____

Aubrey A. Spear, General Manager

APPROVED AS TO CONTENT:

_____

Connie Curtis, Director of Technical and Operational Services

APPROVED AS TO FORM:

_____

Amy L. Sims, General Counsel

WESTON SOLUTIONS, INC.:

_____

Sam Irrinki, PE, Vice President

EXHIBIT A

SCOPE OF SERVICES AND SCHEDULE

SCOPE OF WORK:

The work to be performed by CONSULTANT (WESTON) under this assignment shall consist of providing Professional Engineering services during the Final Design and Procurement phases for improvements at Lift Station No. 24 (LS24). The facility is owned and operated by the San Jacinto River Authority (SJRA). The services will include preparation of final construction documents, coordination with regulatory agencies, and support during the procurement phase. The project will be based on the Preliminary Engineering Report (PER) prepared by WESTON in Work Order No. 1.

The SJRA Lift Station No. 24 (LS24) Improvements will include the following items:

- Construction of a new elevated platform (approximately 8 feet above existing grade) to support the standby generator, ATS, MCC, and associated electrical equipment.
- Installation of a new motor control center (MCC) on the proposed elevated platform.
- Relocation of the existing diesel generator from the existing electrical building to the new elevated platform.
- Implementation of bypass pumping to maintain operations during construction.
- Installation of flow meter on 16-inch force main.
- Demolition and removal of the existing Lift Station 24A and associated appurtenances.
- Improvements to Lift Station 24B, including installation of a new triplex submersible pump system, piping, valves, and associated appurtenances.
- Electrical, instrumentation, and control system improvements associated with the proposed upgrades.
- Demolition and proper disposal of the existing electrical building and existing MCC.
- Site restoration and grading following demolition activities.

Task 1101 – Project Management

To streamline participation and accommodate broad participation, all meetings will be virtual using the Microsoft Teams platform unless otherwise specified.

1. Conduct a project initiation meeting to identify and establish a clear set of goals and objectives for the project, review critical success factors, key schedule milestones, and the preliminary data needs list.
2. Project coordination, management, and communication shall include the following items:

a. Schedule and coordinate milestone project progress meetings to review work completed to date, review planned work, and identify action items. Meetings will be virtual unless otherwise required or requested by SJRA. Coordination for progress meetings will include preparation of materials and exhibits or slides to facilitate discussions. Up to five (5) project meetings are included.

b. Ensure compliance with all contractual terms and conditions including adherence to budget, schedule, scope, and quality.

c. Plan and ensure proper qualified and experienced personnel are timely assigned to project activities and coordinate the efforts of such personnel to ensure budget, schedule, scope, and quality compliance. Ensure other required equipment and material resources are readily available for proper project execution.

d. Prepare, provide, and maintain an electronic Project schedule for SJRA Project Team approval. Update the schedule at all phases of the Project. Schedule shall include critical activity start and/or completion dates as milestones, including monthly progress meetings, design review dates, completion of engineering design studies, and all SJRA Project deliverable due dates, as a minimum. Schedule will include estimated review time for SJRA and any other applicable third parties for all deliverables.

e. Prepare and submit monthly progress/status reports to support monthly billings, and additional progress/status reports as requested by SJRA Project Team. As a minimum, monthly progress/status reports shall include a summary description of tasks completed as of status report date, description of activities planned for next 30 days, financial status of project, status of schedule for project, identification of any technical or other issues which may have an impact to the overall project budget and/or schedule.

f. Manage, administer, and coordinate the Work of all sub-consultants (team members). Review and become familiar with all reports, documents, studies, and other information obtained and developed by the Project's sub-consultants and incorporate into the Work. Identify potential impacts to the Work, develop alternatives to eliminate, minimize, and/or mitigate those impacts and present those alternatives to SJRA Project Team for consideration. Incorporate the alternative selected by SJRA Project Team into the Work.

g. Facilitate document control and document sharing by utilizing the Procore® site for distribution and electronic filing of all Project documents.

h. Implement SJRA standard forms as required by SJRA Project Management Plan.

i. Ensure compliance with SJRA design guidelines, drawing standards, and guide specifications.

3. Invoicing: Submit invoices monthly by the 10th day of the month following the month being invoiced for. Invoices shall include a record of Consultant and/or Consultant's Subconsultant/Subcontractor activities and deliverables completed within the month, and note activities planned for the next month. Invoices shall be submitted to ap@sjra.net. Coordinate with SJRA Project Manager to determine appropriate format and content for invoice submittals.

4. Consultant shall notify the assigned SJRA Project Manager in writing that Consultant has expended eighty percent (80%) of the currently approved SJRA Professional Services Agreement and/or any of the task amounts within seven (7) calendar days of Consultant reaching this expenditure milestone (80% expenditure milestone). Written notification shall be provided regardless of compensation type (i.e., lump sum, cost-plus multiplier, time-and-materials, etc.). Written notification shall include a statement by Consultant indicating whether the remaining amount is adequate to complete current SJRA approved Professional Services Agreement.

Deliverables:	Due Dates:
a. Information/data needs list	*Within 14 calendar days of NTP*
b. Initial project schedule	*At kickoff meeting*
c. Meeting Agendas	*2 business days before each meeting*
d. Meeting minutes and Handouts	*Within 7 calendar days of meeting*
e. Monthly progress reports	*With invoice submittal*

Task 1102 – Final Design

1. Design Phase Site Visits

   WESTON will conduct one (1) site visit during the Final Design Phase to verify design data and confirm proposed improvements.

2. Permitting and Outside Agency Coordination

   a. MCTX Permitting – WESTON will prepare and coordinate submittals to Montgomery County (MCTX) as required for the Project. Services are anticipated to include preparation and submittal of development permits (structure and non-structure), drainage plan approval and supporting documentation, and coordination with MCTX and the Montgomery County Fire Marshal, as applicable. WESTON will assist SJRA in responding to agency comments and incorporate revisions into the design documents.

      Assumption: Permitting requirements, level of effort, and schedule are dependent on final design conditions, including drainage impacts and floodplain considerations. Significant agency-driven design modifications or

additional permitting requirements beyond those identified herein will be considered Additional Services. The level of effort includes the anticipated Montgomery County Drainage Sign-Off review fee. Additional permitting fees are not anticipated.

b. TCEQ Submittal and Plan Approval – WESTON will prepare and coordinate submittals to the Texas Commission on Environmental Quality (TCEQ) as required for the Project. Services include preparation and submission of engineering documentation for review and approval, and coordination with TCEQ during the review process. WESTON will assist SJRA in responding to agency comments and incorporate revisions into the design documents.

   Assumption: No fees are expected for the TCEQ permit.

c. USACE Permitting – Federal environmental coordination, including USACE-related coordination, will be performed under Task 1103 – Environmental Services. No permitting fees are expected, however, SJRA will be responsible if any is required.

d. QA/QC – WESTON will perform internal QA/QC review of permitting submittals.

3. <u>60% Design</u>

   a. Construction Drawings – WESTON will complete detailed construction drawings for the project. The construction drawings will include plan views, profiles, sections, and details as necessary to clearly define the intent of the project and will utilize SJRA drawing standards. WESTON will also define limits of construction, required construction sequencing, environmental protection requirements, identified contractor staging area, and traffic control plans, if needed.

      WESTON will provide an electronic copy of the preliminary construction drawings for SJRA's review. Construction Drawings will be developed to meet SJRA and USACE (PPA) funding requirements.

   b. Project Manual – WESTON will prepare detailed technical specifications and assist SJRA in the development of the construction contract documents. The Project Manual will include Division 01 General Requirements, technical specifications, and associated contract documents required for the project to be accurately bid and efficiently constructed. SJRA's standard specifications and standard products will be utilized, where applicable, for items such as piping, valves, pumps, electrical equipment, SCADA/instrumentation systems, and other equipment. WESTON will develop project-specific technical specifications for unique equipment and systems included within the project scope. SJRA will provide standard front-end bidding and procurement documents. WESTON will provide an electronic copy of the

construction specifications for SJRA's review. Construction Specifications will be developed to meet SJRA and USACE (PPA) funding requirements.

c. Proposal Form – WESTON will prepare a draft Proposal Form for inclusion in the procurement documents as part of the 60% design submittal for SJRA's review.

d. Opinion of Probable Construction Cost (OPCC) – WESTON will prepare an Engineer's Cost Estimate based on the 60% phase design plan. Unit costs will be based on recent bid tabulations for other lift station construction projects in Houston, TX, and the surrounding area.

e. Address Comments from SJRA – WESTON will address one round of comments received from SJRA's team members which will be included in the 90% submittal.

f. QA/QC – WESTON will perform internal Quality Control and Quality Assurance as per WESTON's internal Quality procedures.

g. All deliverables will be provided electronically via Procore®.

4. <u>90% Design</u>

a. Construction Drawings – WESTON will include SJRA's 60% comments and will advance these documents to a level suitable for a 90% submittal.

   WESTON will provide an electronic copy of the 90% construction drawings for SJRA's review. Construction Drawings will meet SJRA and USACE (PPA) funding requirements.

b. Project Manual – WESTON will include SJRA's 60% comments and will advance these documents to a level suitable for a 90% submittal.

   WESTON will provide an electronic copy of the 90% construction specifications for SJRA's review. Construction Specifications will meet SJRA and USACE (PPA) funding requirements.

c. OPCC – WESTON will update the 60% OPCC suitable to a level for a 90% submittal.

d. Proposal Form – WESTON will incorporate SJRA's 60% comments and will advance this document to a level suitable for a 90% submittal.

   WESTON will provide an electronic copy of the 90% Proposal Form for SJRA's review.

e. WESTON will update SJRA provided spreadsheet in Project Manual Appendix with table to identify categories, classes and properties of removed and new assets added to the SJRA system which will be utilized to update the SJRA Enterprise Asset Management (EAM) asset load sheet (.xlsx) format.

f. Address Comments from SJRA – WESTON will address one round of comments received from SJRA's team members which will be included in the 100% submittal.

g. QA/QC – WESTON will perform internal Quality Control and Quality Assurance as per WESTON's internal Quality procedures.

h. All deliverables will be provided electronically via Procore®.

5. <u>100% Design</u>

a. Construction Drawings – WESTON will include SJRA's 90% comments and make appropriate revisions and submit a revised and final electronic copy of the construction drawings. The 100% copy will include signed and sealed drawings and will be ready for bidding.

b. Project Manual – WESTON will include SJRA's 90% comments and make appropriate revisions and submit a revised and final electronic copy of the project manual. The 100% copy will include signed and sealed complete project manual and will be ready for bidding.

c. OPCC – WESTON will provide an update and final OPCC.

d. Proposal Form – WESTON will incorporate SJRA 90% comments and provide a final 100% Proposal Form ready for bidding.

e. QA/QC – WESTON will perform internal Quality Control and Quality Assurance as per WESTON's internal Quality procedures.

f. Final Comment Responses – WESTON will address one round of final comments received from SJRA's team members.

WESTON will provide final sealed plans in PDF and CAD; the Final Proposal Form in PDF and Microsoft Excel; the signed and sealed Project Manual in PDF format; and final Comment Responses in PDF formats. All deliverables will be provided electronically via Procore®.

<u>Deliverables:</u>	<u>Due Dates:</u>
a. *60% Design Submittal*	*85 calendar days following NTP for Final Design*
b. *90% Design Submittal*	*56 calendar days following receipt of consolidated 60% SJRA review comments*
c. *100% Design Submittal*	*30 calendar days following receipt of SJRA and permitting agency 90% review comments*

Task 1103 Environmental Services (NEPA Categorical Exclusion Support)

Consultant shall provide environmental support services necessary to support compliance with the National Environmental Policy Act (NEPA) for the proposed improvements to Lift Station No. 24. These services will be performed by a qualified subconsultant and will

include preparation of documentation required to obtain NEPA clearance for the Project. The environmental scope is anticipated to be completed through preparation of a Categorical Exclusion (CatEx) document. The environmental scope and associated fee assume that a CatEx remains at the appropriate level of NEPA documentation for the Project.

Environmental services shall include the following:

1. Preparation of a draft NEPA Categorical Exclusion (CatEx) documenting the proposed project, existing environmental conditions, and anticipated environmental impacts associated with the proposed improvements.
2. Preparation of a final NEPA CatEx incorporating comments received from SJRA, funding agencies, and other applicable reviewers.
3. Desktop environmental review and preparation of coordination letters, as necessary, to support NEPA documentation.
4. Coordination with SJRA and the Project Team to obtain necessary project information, including engineering plans and supporting documentation required for evaluation of environmental impacts.

Assumptions:

- SJRA and/or Consultant will provide access to the project site, as needed, and furnish or assist in obtaining available engineering plans, drawings, reports, and supporting information necessary for preparation of the CatEx.
- Environmental services are limited to documentation necessary to support NEPA clearance through a CatEx.
- The scope assumes that the Project qualifies for a CatEx, and that preparation of an Environmental Assessment (EA), Environmental Impact Statement (EIS), or other advanced NEPA documentation will not be required. If a higher level of NEPA review is required, additional services will be required.

Exclusions:

The following services are not included in this scope and, if required, will be considered Additional Services:

- Formal field surveys to identify biological or cultural resources located on or adjacent to the project site.
- Participation in public meetings or public hearings.
- Preparation of an Environmental Assessment (EA) or Environmental Impact Statement (EIS).
- Additional environmental studies, documentation, or agency coordination beyond that required to support preparation of the CatEx.

Deliverables:		Due Dates:
a.	*Draft CatEx*	*Within 30 calendar days following Notice to Proceed for Environmental Services*
b.	*Final CatEx*	*14 calendar days following receipt of consolidated review comments*

Task 1104 Procurement Phase Services

Consultant shall assist the SJRA in obtaining proposals for construction of the project via the competitive sealed proposal process.

1. Provide assistance to Project Team during the procurement process. This will include:
    a. Provide electronic plans and specifications marked Issued for Proposal to the SJRA via Procore®.
    b. Prepare for and attend a pre-proposal conference (including a site visit to LS24) for prospective proposers at the office of the SJRA.
    c. Respond to questions from prospective proposers – WESTON will respond to a reasonable number of bidder inquiries submitted during the SJRA-established bidder questions period.
    d. Prepare addenda – WESTON will prepare Addenda required to address changes to bid documents during the bid phase. Budget for 1 Addendum has been included; additional addenda will be an additional service.
    e. The SJRA will advertise the project, post electronic proposal documents on the SJRA bidding website, and issue all addenda.
2. Prepare conformed documents marked Issued for Construction that incorporate all addenda into the plans and specifications.
    a. Provide conformed documents/issue for construction in electronic format (PDF) via Procore®.
    b. Provide all CAD (AutoCAD) files in accordance with the requirements of the SJRA Design Standards and Criterial Manual. Provide all CAD and other electronic files as necessary to facilitate implementation of SJRA's GIS system. Projection to be NAD83 State Plane Texas Central FIPS 4203 (US Feet).
    c. Provide complete SJRA Contract Documents in .pdf and .doc formats and provide complete set of conformed drawings in both .pdf format and .dwg format using AutoCAD 2023.

SERVICES TO BE PROVIDED BY SJRA

1. Issue addenda, if required.

2. Receive and open bids/proposals.
3. Bidder evaluations and review.
4. Award and final acceptance of contract.

Deliverables:	Due Dates:
a. Electronic Proposal Documents	*Within 3 weeks after the Final Submittal*
b. Addenda	*Within 3 Calendar Days Prior to Proposals Due Date*
c. Conformed Documents and CAD Files	*Within 10 Calendar Days After Notice of Award*

Additional Services:

This Scope of Services defines the services included in WESTON's proposed fee. Services not expressly identified herein are excluded and, if requested by SJRA, shall be considered Additional Services and authorized through a separate amendment or work authorization. WESTON proposes to perform the requested work for Not to Exceed fee as shown in Exhibit B.

Schedule Requirements: Commence Services: November 5, 2026
Completion of Services: October 22, 2027

EXHIBIT A - SCHEDULE

ID	Task Name	Start	Finish	Duration
1	**Contract Period**	**Thu 11/5/26**	**Fri 10/22/27**	**352 days**
2	NTP	Thu 11/5/26	Thu 11/5/26	1 day
3	**60% Design Submittal**	**Fri 11/6/26**	**Tue 3/9/27**	**124 days**
4	Kickoff / Design Start	Fri 11/6/26	Fri 11/6/26	1 day
5	Develop 60% Drawings & Specifications	Mon 11/9/26	Wed 1/20/27	73 days
6	Internal QA/QC Review	Thu 1/21/27	Fri 1/29/27	9 days
7	Submit 60% Design Package	Fri 1/29/27	Fri 1/29/27	0 days
8	SJRA Review of 60% Design Package	Mon 2/1/27	Tue 3/2/27	30 days
9	Comment Review Mtg / Response Log	Wed 3/3/27	Tue 3/9/27	7 days
10	**Environmental Services**	**Fri 11/6/26**	**Tue 3/16/27**	**131 days**
11	Draft CatEx	Fri 11/6/26	Mon 12/7/26	32 days
12	Agency Review	Mon 2/1/27	Tue 3/2/27	30 days
13	Final CatEx	Wed 3/3/27	Tue 3/16/27	14 days
14	**90% Design Submittal**	**Wed 3/10/27**	**Fri 6/4/27**	**87 days**
15	Develop 90% Drawings & Specifications	Wed 3/10/27	Tue 4/20/27	42 days
16	Internal QA/QC Review	Wed 4/21/27	Tue 4/27/27	7 days
17	Submit 90% Design Package	Tue 4/27/27	Tue 4/27/27	0 days
18	SJRA / Agency Review of 90% Design Package	Wed 4/28/27	Tue 5/25/27	28 days
19	Comment Review Mtg / Response Log(s)	Fri 5/28/27	Fri 6/4/27	8 days
20	**100% Design Submittal**	**Mon 6/7/27**	**Thu 6/24/27**	**18 days**
21	Develop 100% Drawings & Specifications	Mon 6/7/27	Mon 6/21/27	15 days
22	Internal QA/QC Review	Tue 6/22/27	Thu 6/24/27	3 days
23	Final (100%) Submittal	Thu 6/24/27	Thu 6/24/27	0 days
24	**Bid/Procurement Phase**	**Fri 6/25/27**	**Thu 9/23/27**	**90 days**
25	SJRA Preps Advertise	Fri 6/25/27	Thu 7/8/27	14 days
26	Advertise for Bids	Fri 7/9/27	Mon 8/9/27	32 days
27	Pre-Bid Meeting	Thu 7/22/27	Thu 7/22/27	0 days
28	Bidder Questions/Addendum Period	Fri 7/23/27	Thu 7/29/27	7 days
29	Bids Due	Tue 8/10/27	Tue 8/10/27	0 days
30	Bid Evaluation & Recommendation of Award	Wed 8/11/27	Fri 9/3/27	24 days
31	Conformed Documents	Fri 9/3/27	Fri 9/3/27	0 days
32	SJRA Board Approval for Construction Contract	Thu 9/23/27	Thu 9/23/27	0 days
33	**Project Close Out / Final Billing**	Thu 9/23/27	Fri 10/22/27	30 days

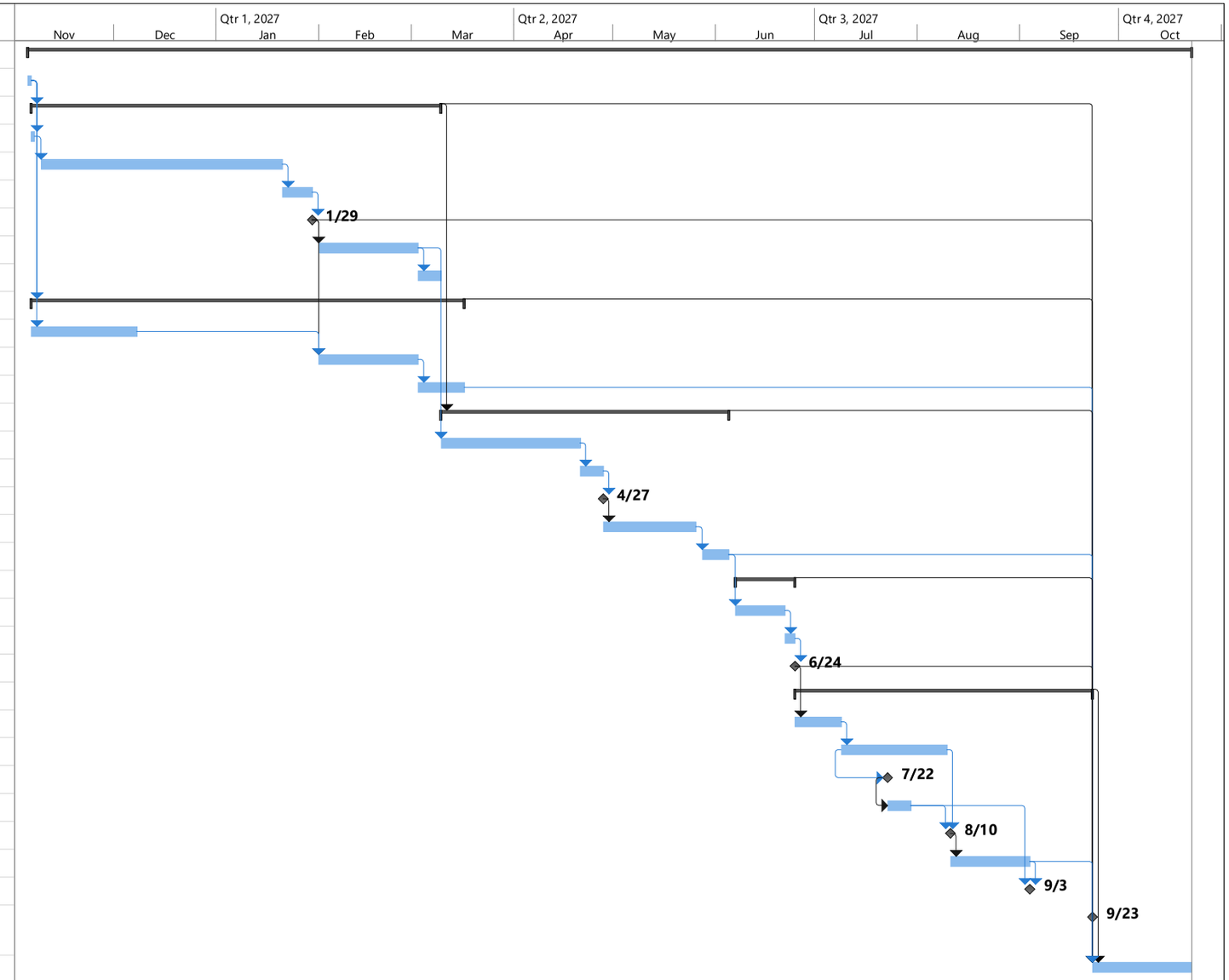

SJRA LS24 Improvements
Final Design & Procurement
Date: 9/29/2026

Task		Project Summary		Manual Task		Start-only		Deadline	
Split		Inactive Task		Duration-only		Finish-only		Progress	
Milestone		Inactive Milestone		Manual Summary Rollup		External Tasks		Manual Progress	
Summary		Inactive Summary		Manual Summary		External Milestone			

EXHIBIT B

COMPENSATION

Compensation terms for cost reimbursable and lump sum Services:

Task	Compensation Type	Amount
1101 – Project Management	Lump Sum	$ 17,458.15
1102 – Final Design	Lump Sum	$181,908.02
1103 – Environmental Services	Lump Sum	$ 11,281.33
1104 – Procurement Phase Services	Lump Sum	$ 14,017.24
	Total Compensation:	$224,664.74

A.1. COMPENSATION BASED ON COST WITH MULTIPLIER

For professional and non-professional staff, SJRA will compensate CONSULTANT on the basis of a multiplier added to the Raw Salary Cost as shown in the table below for the Scope of Work specified in Exhibit A. Professional staff are defined as a manager, supervisor, engineer, scientist or other recognized profession. Typically, professional employees are salaried exempt employees. Typically, non-professional employees are hourly non-exempt employees. The Raw Salary Cost for salaried employees is defined as the annual base salary excluding bonuses, burdens, and benefits divided by 2080. For hourly personnel, the Raw Salary Cost is defined as the hourly wage paid to the employee exclusive of burdens and benefits. Standard equipment, communications, technology, or similar hourly expenses that are typically part of CONSULTANT's hourly rates may be included in the Raw Salary Cost for salaried employees and hourly personnel, if approved by SJRA. Any shift premiums or premiums paid for hours worked in excess of 40 per week will be added to the base hourly wage and will be considered a part of the Raw Salary Cost.

(a) RAW SALARY MULTIPLIERS

3.00 for professional and non-professional staff working at CONSULTANT or its subcontractor, subconsultant, or vendor offices

N/A for professional and non-professional staff working in the field during construction or at SJRA offices for a minimum period of six (6) consecutive months

N/A for construction inspectors working in the field

(b) EXPENSES

"Billable Expenses" include all costs and expenses directly attributable to performance of the Services, which are in good accounting practice direct costs of the Services and not covered by the allowance for payroll burden and general office overhead and profit. Costs of outside services will be charged at actual invoice cost plus ten percent (10%). "Billable Expenses" include: subconsultants; travel expenses to and from locations outside Harris and Montgomery Counties; and copies of all deliverables submitted to SJRA. All local vehicles used outside Harris and Montgomery Counties will be reimbursed at the current IRS allowable rate with no markup. All other expenses are considered to be covered by the allowance for payroll burden and general office overhead and profit and are non-billable expenses.

A.2. LUMP SUM COMPENSATION

SJRA will compensate CONSULTANT on the basis of a mutually agreed upon lump sum price for the scope of work specified in Exhibit A. The cost estimate will include a summary breakdown showing the labor hours and cost, subconsultant costs, and other direct costs included in the estimate. Labor rates to be used in preparing the estimate will be the actual salary or wage of the employee times the appropriate multiplier specified in Paragraph A.1(a) above. CONSULTANT will submit and SJRA will pay monthly invoices based on the mutually agreed upon percentage of the Services completed.

EXHIBIT B

SJRA - Lift Station No. 24

29 September 2026

Proposed Fee

BASIC SERVICES: FINAL DESIGN/PROCUREMENT PHASE SERVICES

Item	Description/Task	Labor Hours									Dollar Summary				
		Principal Engineer	QAQC Manager	Project Manager	Project Engineer	Structural Engineer	Engineer in Training II	CAD Technician IV	Cost Estimator	Administrative Assistant IV	Subtotal (hrs)	Subtotal (cost $)	Subs (cost)	Subs Markup (10% cost)	Total Fee
	Raw Salary	$ 110.58	$ 88.73	$ 81.73	$ 67.26	$ 76.52	$ 37.08	$ 45.00	$ 42.50	$ 33.50					
	Loaded Hourly Rate (3x)	$ 331.74	$ 266.19	$ 245.19	$ 201.79	$ 229.56	$ 111.24	$ 135.00	$ 127.50	$ 100.49					
1101	**Project Management**														
1	**Project Kickoff Meeting**	1		4	4						9	$ 2,119.66			$ 2,119.66
2	**Project Coordination, Management, and Communications**			56						16	72	$ 15,338.50			$ 15,338.50
	Subtotal Project Management Services	1	0	60	4	0	0	0	0	16	81	$ 17,458.15	$ -	$ -	$ 17,458.15
		$ 331.74	$ -	$ 14,711.40	$ 807.16	$ -	$ -	$ -	$ -	$ 1,607.86					
1102	**Design Phase Services (60%/90%/100%)**														
1	**Design Phase Site Visits**														
	Site Visits (1 visit)				4		4				8	$ 1,252.12			$ 1,252.12
2	**Permitting and Outside Agency Coordination**														
a.	MCTX Permitting	1		2	4		12				19	$ 2,964.16			$ 2,964.16
	MCTX Permitting - Drainage Sign-Off Review Fee											$ 2,250.00			$ 2,250.00
b.	TCEQ Submittal / Plan Approval Ltr.			2	4		12				18	$ 2,632.42			$ 2,632.42
c.	USACE Mtg. / Approval Ltr./ No Objection Ltr.	1		2						2	5	$ 1,023.10			$ 1,023.10
d.	QA/QC		8								8	$ 2,129.52			$ 2,129.52
3	**60% Design**														
a.	Construction Drawings	1		18	60	40	66	128			313	$ 50,656.74			$ 50,656.74
b.	Project Manual	1		4	16	8	44			4	77	$ 11,674.13			$ 11,674.13
c.	OPCC			2	2	4			4		12	$ 2,322.20			$ 2,322.20
d.	Proposal Form (60%)			2	4		8			2		$ 2,388.44			$ 2,388.44
e.	Address Comments from SJRA			2	12	4	20				38	$ 6,054.89			$ 6,054.89
f.	QA/QC		16								16	$ 4,259.04			$ 4,259.04
4	**90% Design**														
a.	Construction Drawings	1		14	30	20	38	48			151	$ 25,116.39			$ 25,116.39
b.	Project Manual	1		4	10		16			4	35	$ 5,512.19			$ 5,512.19
c.	OPCC Update			1	1		2		4		8	$ 1,179.46			$ 1,179.46
d.	Proposal Form (90%)			1	2		4			2	9	$ 1,294.71			$ 1,294.71
e.	Address Comments from SJRA			2	5	4	14				25	$ 3,974.93			$ 3,974.93
f.	QA/QC		12								12	$ 3,194.28			$ 3,194.28
5	**100% Design**														
a.	Construction Drawings	1		4	8	2	16	24			55	$ 8,405.77			$ 8,405.77
b.	Project Manual	1		2	5		10			2	20	$ 3,144.45			$ 3,144.45
c.	OPCC Update				1				2		3	$ 456.79			$ 456.79
d.	Proposal Form (100%)			1	1		2			1	5	$ 769.95			$ 769.95
e.	Final QA/QC		8								8	$ 2,129.52			$ 2,129.52
f.	Address Comments from SJRA and Permitting Agencies			2	8	3	16				29	$ 4,573.21			$ 4,573.21
g.	Final Comment Responses	1		1	2		8				12	$ 1,870.43			$ 1,870.43
1102E	**Electrical Design**														
	Baird, Gilroy, & Dixon, LLC - Electrical Engineering										0	$ -	$ 29,935.64	$ 2,993.56	$ 32,929.20
	Subtotal Design Phase Services	9	44	66	179	85	292	200	10	17	967	$ 151,228.82	$ 29,935.64	$ 2,993.56	$ 184,158.02
		$ 2,985.66	$ 11,712.36	$ 16,182.54	$ 36,120.23	$ 19,512.60	$ 32,482.08	$ 27,000.00	$ 1,275.00	$ 1,708.35					
1103	**Environmental Services (NEPA Compliance Support | CatEx Documentation)**														
	Environmental Research Group, LLC - Environmental Services										0	$ -	$ 10,255.75	$ 1,025.58	$ 11,281.33
	Subtotal Environmental Services	0	0	0	0	0	0	0	0	0	0	$ -	$ 10,255.75	$ 1,025.58	$ 11,281.33
		$ -	$ -	$ -	$ -	$ -	$ -	$ -	$ -	$ -					

EXHIBIT B

SJRA - Lift Station No. 24

29 September 2026

Proposed Fee

BASIC SERVICES: FINAL DESIGN/PROCUREMENT PHASE SERVICES

Item	Description/Task	Labor Hours									Dollar Summary				
		Principal Engineer	QAQC Manager	Project Manager	Project Engineer	Structural Engineer	Engineer in Training II	CAD Technician IV	Cost Estimator	Administrative Assistant IV	Subtotal (hrs)	Subtotal (cost $)	Subs (cost)	Subs Markup (10% cost)	Total Fee
	Raw Salary	$ 110.58	$ 88.73	$ 81.73	$ 67.26	$ 76.52	$ 37.08	$ 45.00	$ 42.50	$ 33.50					
	Loaded Hourly Rate (3x)	$ 331.74	$ 266.19	$ 245.19	$ 201.79	$ 229.56	$ 111.24	$ 135.00	$ 127.50	$ 100.49					
1104	**Procurement / Bid Phase Services**														
1	Project Management	1		4							5	$ 1,312.50			$ 1,312.50
2	Attend Pre-Bid Meeting (at SJRA)	1		4	4						9	$ 2,119.66			$ 2,119.66
3	Respond to Bidder Questions			2	6	2	8				18	$ 3,050.15			$ 3,050.15
4	Prepare Addenda (1)		1	2	4		6	4		4	21	$ 3,173.13			$ 3,173.13
5	Conformed Documents		2	1	8		8	8			27	$ 4,361.80			$ 4,361.80
	Subtotal Bidding Phase	2	3	13	22	2	22	12	0	4	80	$ 14,017.24	$ -	$ -	$ 14,017.24
		$ 663.48	$ 798.57	$ 3,187.47	$ 4,439.36	$ 459.12	$ 2,447.28	$ 1,620.00	$ -	$ 401.96					
1101	PROJECT MANAGEMENT	1	0	60	4	0	0	0	0	16	81	81			
	PROJECT MANAGEMENT (LUMP SUM) COST	$ 331.74	$ -	$ 14,711.40	$ 807.16	$ -	$ -	$ -	$ -	$ 1,607.86		$ 17,458.15	$ -	$ -	$ 17,458.15
1102	DESIGN PHASE SERVICES (60%/90%/100%)	9	44	66	179	85	292	200	10	17	902	902			
	DESIGN PHASE SERVICES (60%/90%/100%) (LUMP SUM) COST	$ 2,985.66	$ 11,712.36	$ 16,182.54	$ 36,120.23	$ 19,512.60	$ 32,482.08	$ 27,000.00	$ 1,275.00	$ 1,708.35		$ 148,978.82	$ 29,935.64	$ 2,993.56	$ 181,908.02
1103	ENVIRONMENTAL SERVICES (NEPA COMPLIANCE SUPPORT | CATEX DOCUMENTATION)	0	0	0	0	0	0	0	0	0	0	0			
	ENVIRONMENTAL SERVICES (NEPA COMPLIANCE SUPPORT | CATEX DOCUMENTATION) (LUMP SUM) COST	$ -	$ -	$ -	$ -	$ -	$ -	$ -	$ -	$ -		$ -	$ 10,255.75	$ 1,025.58	$ 11,281.33
1104	PROCUREMENT / BID PHASE SERVICES	2	3	13	22	2	22	12	0	4	80	80			
	PROCUREMENT / BID PHASE SERVICES (LUMP SUM) COST	$ 663.48	$ 798.57	$ 3,187.47	$ 4,439.36	$ 459.12	$ 2,447.28	$ 1,620.00	$ -	$ 401.96		$ 14,017.24	$ -	$ -	$ 14,017.24
	TOTALS	$ 995.22	$ 798.57	$ 17,898.87	$ 5,246.51	$ 459.12	$ 2,447.28	$ 1,620.00	$ -	$ 2,009.82		**$ 180,454.21**	$ 40,191.39	$ 4,019.14	**$ 224,664.74**

EXHIBIT C
SJRA'S INSURANCE REQUIREMENTS

1. General Requirements. CONSULTANT shall, at all times during the performance of Services issued under this Agreement and for not less than two years after the completion of any Services, provide and require all subconsultants and subcontractors to provide insurance coverage with companies lawfully authorized to do business in Texas and acceptable to SJRA and with forms of policies acceptable to SJRA, which coverage will protect CONSULTANT from claims set forth below which may arise out of or result from CONSULTANT's Services and operations under this Agreement for which CONSULTANT may be legally liable, whether such Services or operations are by CONSULTANT or a subconsultant or subcontractor of CONSULTANT or by anyone directly or indirectly employed by any of them, or by anyone for whose acts any of them may be liable, and meeting not less than the minimum requirements set forth in this Exhibit C. Such insurance is to be provided at the sole cost of CONSULTANT and all subconsultants and subcontractors. The terms "subconsultant" and "subcontractor" for the purposes of this Exhibit C shall include subconsultants and subcontractors of any tier.

(a) **Kinds of Claims**

(1) claims under workers' compensation, disability benefit and other similar employee benefit acts which are applicable to CONSULTANT's Services to be performed;

(2) claims for damages because of bodily injury, occupational sickness or disease, or death of CONSULTANT's employees;

(3) claims for damages because of bodily injury, sickness or disease, or death of any person other than CONSULTANT's employees;

(4) claims for damages insured by usual personal injury liability coverage which are sustained (i) by a person as a result of an offense directly or indirectly related to employment of such person by CONSULTANT, or (ii) by another person;

(5) claims for damages other than to CONSULTANT's work itself, because of injury to or destruction of tangible property, including loss of use resulting therefrom;

(6) claims for damages because of bodily injury, death of a person or property damage arising out of ownership, maintenance or use of a motor vehicle;

(7) claims involving contractual liability insurance applicable to CONSULTANT's indemnification obligations under this Agreement; and

(8) claims for errors and omissions in the provision of professional consulting services of the kind rendered by CONSULTANT pursuant to this Agreement.

(b) **Policies and Minimum Limits of Liability**

PLEASE NOTE: These requirements should provide general guidance only, additional requirements based on project specifics of the contract may be required. Contract amounts over limits will require excess coverage to cover the difference. Combined single limits and excess coverage must equal the Contract Amount (CA).

Risk Level TIER 2	Coverage		Contract Amount <=$25k	>$25k-$75k	>$75k-$1M	>=$1M-$2M	>$2M
Professional Services **Services:** Architect, Engineer, Surveyor, Professional Non-AES excluding legal services. **Contract Type:** ➢ Master Professional Services Agreement (MPSA)(AES)-Across all divisions/3 years ➢ Professional Services Agreement (PSA)(AES)-project specific, multiple phases would be new work orders. ➢ Consulting Agreement (Non-AES) ➢ Engagement Letter	**Commercial General Liability (CGL)** (Premises/Completed Operations)	Each Occurrence	$300k	$500k	$1M	$1.5M	= $2M
		Fire Damage	$100k	$250k	$1M	$1.5M	= $2M
		Personal & ADV injury	$300k	$500k	$1M	$1.5M	= $2M
		Aggregate	$600K	$750k	$2M	$3M	= $4M
		Premises/Operations	$300k	$500k	$1M	$1.5M	= $2M
		Products/ Completed Operations	$300K	$500k	$1M	$1.5M	= $2M
	Workers Compensation	Per occurrence bodily injury	$500k	$500k	$500k	$500k	$500k
		Per Occurrence bodily injury by disease	$500k	$500k	$500k	$500k	$500k
		Policy Limit for Bodily Injury Disease	$500k	$500k	$500k	$500k	$500k
	Business Auto Liability Owned, Non-Owned, Hired, Injury and Property coverage for all	Bodily Injury	$300k	$500k	$500k	$1M	$1M
		Property Damage	$300k	$500k	$500k	$1M	$1M
		Combined Single Limit	$600k	$1M	$1M	$2M	= $2M
	Professional/EO Liability	Professional and Cyber required based on the scope of work	500k	$1M	$1M	$2M	= $2M

*Aggregate limits are per 12-month policy period unless otherwise indicated; defense costs shall be excluded from limits of liability of each policy other than Professional Liability Insurance; Commercial General Liability Insurance coverage limits shall be on a per-project basis.

(c) All required insurance shall be maintained with responsible insurance carriers acceptable to SJRA and lawfully authorized to issue insurance of the types and amounts set forth in this Exhibit C. Carriers should have a Best's Financial Strength Rating of at least "A-" and a Best's Financial Size Category of Class VIII or better, according to the most current edition of *Best's Key Rating Guide, Property-Casualty United States* or be of sufficient size and financial strength as adjudged by SJRA to meet the financial obligations evidenced in the certificate of insurance.

(d) All certificates shall be in a form reasonably acceptable to SJRA and each certificate must state to the extent permitted by Texas Insurance Code Chapter 1811 that the policy may not expire or be cancelled, materially modified, or nonrenewed unless the carrier and/or CONSULTANT gives SJRA thirty (30) days advance written notice. When any required insurance, due to the attainment of a normal expiration date or renewal date, shall expire, CONSULTANT shall, prior to such expiration, supply SJRA with certificates of insurance and amendatory riders or endorsements that clearly evidence the continuation of all coverage in the same manner, limits of protection, and scope of coverage as is required by this Agreement. Any renewal or replacement policies shall be in form and substance satisfactory to SJRA and written by carriers acceptable to SJRA and meeting the requirements of this Exhibit C. CONSULTANT shall or shall cause the applicable carrier or carriers to give written notice to SJRA within thirty (30) days of the date on which total claims by any Party against insurance provided pursuant to this Exhibit C reduce the aggregate amount of coverage below the amounts required by this Exhibit C. In addition, CONSULTANT shall or shall cause the applicable carrier or carriers to provide SJRA with amendatory riders or endorsements to the Commercial General Liability Insurance policy that specify that the coverage limits apply on a per-project basis.

(e) With respect to all policies required in this Exhibit C, as soon as practicable prior to execution of this Agreement, CONSULTANT shall deposit with SJRA true and correct original certificates thereof, bearing notations or accompanied by other evidence satisfactory to SJRA that the requirements of this Exhibit C are being met, and such certificates shall be attached hereto as Exhibit D. If requested to do so by SJRA, CONSULTANT shall also furnish the originals or certified copies of the insurance policies for inspection including but not limited to copies of endorsements.

(f) All policies of insurance and certificates, with the exception of Professional Liability and Workers' Compensation Insurance, shall name the INDEMNITEES as additional insureds. Without limiting the foregoing, CONSULTANT's Commercial General Liability Insurance policy shall name the INDEMNITEES as additional insureds pursuant to ISO Additional Insured Endorsements CG 20-10-10-01 and CG 20-33-10-01 or their combined equivalents. Further, the CONSULTANT shall provide the INDEMNITEES any defense provided by its Commercial General Liability Insurance policy to the fullest extent allowed by law.

(g) CONSULTANT hereby waives all rights of recovery and damages against the INDEMNITEES to the extent such damages are covered or should have been covered by the insurance obtained or required to be obtained by CONSULTANT under this Agreement. All of CONSULTANT's policies of insurance, with the exception of Professional Liability Insurance, shall include a waiver of subrogation in favor of the INDEMNITEES.

(h) The Parties intend that the CONSULTANT'S insurance shall be primary and non-contributing with respect to any other insurance maintained by SJRA and all policies of insurance obtained by CONSULTANT shall be endorsed to be primary and non-contributing with respect to any other insurance maintained by SJRA.

(i) If any policy required to be purchased pursuant to this Exhibit C is subject to a deductible, self-insured retention or similar self-insurance mechanism which limits or otherwise reduces coverage, the deductible, self-insured retention, or similar self-insurance mechanism shall be the sole responsibility of CONSULTANT in the event of any loss and CONSULTANT hereby waives any claim therefor against any INDEMNITEE.

(j) CONSULTANT shall require and cause its subconsultants and subcontractors to purchase and maintain the insurance policies set forth in Section 1(b) above with limits of liability commensurate with the amount of each subconsulting or subcontract agreement, but in no case less than $500,000 per occurrence. CONSULTANT shall provide copies of insurance certificates for all such insurance to SJRA prior to any subconsultant's or subcontractor's performance of any Services.

(k) If CONSULTANT fails to procure or to maintain in force the insurance required by this Exhibit C, SJRA may secure such insurance and the costs thereof shall be borne by CONSULTANT. CONSULTANT shall reimburse SJRA the cost of such insurance plus a ten percent (10%) administrative charge within ten (10) days after billing by SJRA. Any unpaid sum remaining fifteen (15) days after billing by SJRA shall bear interest at the rate of twelve percent (12%) per annum until paid by CONSULTANT. Except to the extent prohibited by Subchapter C of Chapter 151 of the Texas Insurance Code, **CONSULTANT SHALL DEFEND, INDEMNIFY, AND HOLD HARMLESS THE INDEMNITEES FROM AND AGAINST ANY AND ALL LOSSES, CLAIMS, DAMAGES, AND EXPENSES (INCLUDING, WITHOUT LIMITATIONS, COURT COSTS, COSTS OF DEFENSE, AND ATTORNEYS' FEES), THAT ANY INDEMNITEE MAY INCUR AS A RESULT OF CONSULTANT'S FAILURE TO OBTAIN OR CAUSE TO BE OBTAINED THE SPECIFIC ENDORSEMENTS OR INSURANCE REQUIRED PURSUANT TO THIS AGREEMENT.** Failure of any INDEMNITEE to identify any deficiency in the insurance forms provided shall not be construed as a waiver of CONSULTANT's obligation to maintain such insurance and to cause such insurance to be maintained.

(l) CONSULTANT's compliance with the provisions of this Exhibit C shall not be deemed to constitute a limitation of CONSULTANT's liability with respect to claims covered by insurance provided or required pursuant to this Exhibit C or in any way limit, modify, or otherwise affect CONSULTANT's obligation under this Agreement or otherwise. CONSULTANT's obligations under this Agreement to defend, indemnify and/or hold harmless INDEMNITEES shall not be limited in any way by any

insurance required of CONSULTANT by this Agreement or otherwise provided or maintained by CONSULTANT. Any insurance obligations of CONSULTANT under this Agreement are independent from CONSULTANT's obligations under this Agreement to defend, indemnify and/or hold harmless INDEMNITEES. The insolvency, bankruptcy, or failure of any insurance company carrying insurance for CONSULTANT or any subcontractor, or the failure or any insurance company to pay claims accruing shall not be held to waive any of the provisions of this Agreement.

(m) If requested by SJRA, CONSULTANT shall furnish or shall cause to be furnished any such other insurance or limits as SJRA may reasonably deem necessary for any work.

EXHIBIT D
CONSULTANT'S CERTIFICATE OF INSURANCE