SAN JACINTO RIVER AUTHORITY

THE WOODLANDS DIVISION

GROUND STORAGE TANK NO 2

AT WATER PLANT NO. 4

CSP NO. 19-0047

CONTRACT NO. 19-0047

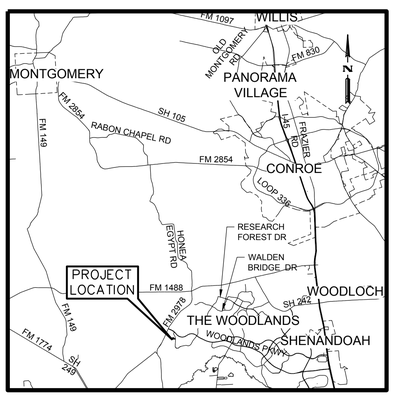

VICINITY MAP

NTS

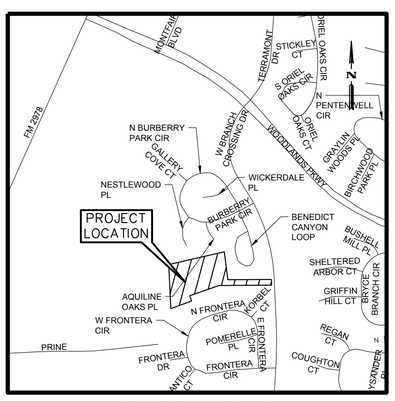

LOCATION MAP

NTS

KEY MAP #215X

11904 W BRANCH CROSSING DR

THE WOODLANDS, TX 77382

DIRECTORS

LLOYD B. TISDALE	PRESIDENT
RONNIE ANDERSON	VICE PRESIDENT
MARK MICHELETTI	TREASURER
JIM ALEXANDER	SECRETARY
ED BOULWARE	MEMBER
KAAREN CAMBIO	MEMBER
BRENDA COOPER	MEMBER

GENERAL MANAGER: JACE A. HOUSTON

ISSUE FOR CONSTRUCTION DATE: 06/28/2019

AECOM

AECOM TECHNICAL SERVICES, INC.
19219 KATY FREEWAY, SUITE 100
HOUSTON, TEXAS 77094
WWW.AECOM.COM
TBPE REG. NO. F-3580

AECOM Project No.: 60592253

STATE OF TEXAS
MICHAEL J. ROLEN
55388
REGISTERED PROFESSIONAL ENGINEER
06/28/2019

GENERAL

COVER SHEET

SHEET 00G001

SEQ. 1 OF 45

AGENCY REVIEW SUBMITTAL GST NO. 2 AT WP NO. 4

FILE: P:_PWD\SJRA\60592253 - Well Rehab GST No. 2, WP 4\900 CAD, GIS\910-CAD\20-SHEETS\GENERAL\00G001.dwg LAYOUT: 00G001 DATE: 6/27/2019 3:17:03 PM BY: GARNERJ

Date: Jun 27, 2019 - 3:17pm User: garnerj File: P:_PWD\SJRA\60592253 - Well Rehab GST No. 2, WP 4\900 CAD, GIS\910-CAD\20-SHEETS\GENERAL\00G001.dwg

INDEX OF SHEETS

SEQ. NO.	SHEET NO.	TITLE
		GENERAL
1	00G001	COVER SHEET
2	00G002	INDEX OF SHEETS
3	00G003	LEGEND
4	00G004	TAGGING CONVENTION 1
5	00G005	TAGGING CONVENTION 2
6	00G006	CONSTRUCTION NOTES
7	00G007	TEXAS COMMISSION ON ENVIRONMENTAL QUALITY GENERAL CONSTRUCTION NOTES
		CIVIL
8	00C001	CIVIL LEGEND
9	00C501	CIVIL DETAILS 1
10	00C502	CIVIL DETAILS 2
11	00C503	CIVIL DETAILS 3
12	00C504	CIVIL DETAILS 4
13	00C505	CIVIL DETAILS 5
14	01V101	EXISTING SITE PLAN
15	01C101	SITE PLAN MODIFICATIONS
16	01C102	YARD PIPING PLAN MODIFICATIONS
		STRUCTURAL
17	00S001	STRUCTURAL NOTES
18	00S501	STRUCTURAL DETAILS
		PROCESS
19	00D501	PROCESS DETAILS
20	02X101	EXISTING GROUND STORAGE TANK NO. 1 PLAN AND SECTION
21	02D101	GROUND STORAGE TANK NO. 2 PLAN AND SECTION
22	02D301	GROUND STORAGE TANK NO. 2 SECTIONS 1
23	02D302	GROUND STORAGE TANK NO. 2 SECTIONS 2
24	02D303	GROUND STORAGE TANK NO. 2 SECTIONS 3
25	02D501	GROUND STORAGE TANK NO. 2 DETAILS 1
26	02D502	GROUND STORAGE TANK NO. 2 DETAILS 2
27	02D503	GROUND STORAGE TANK NO. 2 DETAILS 3
		ELECTRICAL
28	00E001	ELECTRICAL LEGEND
29	00E501	ELECTRICAL DETAILS 1
30	00E502	ELECTRICAL DETAILS 2
31	00E503	ELECTRICAL DETAILS 3
32	00E601	ELECTRICAL SCHEDULES 1
33	00E602	ELECTRICAL SCHEDULES 2
34	01E101	ELECTRICAL SITE PLAN MODIFICATIONS
35	02E101	GROUND STORAGE TANK NO. 2 PLAN
36	03E101	PUMP BUILDING INSTRUMENTATION PLAN MODIFICATIONS
37	03E501	PUMP BUILDING DETAILS
38	03E601	SYSTEM CONTROL PANEL PARTIAL ONE LINE DIAGRAM MODIFICATIONS SHEET 1 OF 2
39	03E602	SYSTEM CONTROL PANEL PARTIAL ONE LINE DIAGRAM MODIFICATIONS SHEET 2 OF 2
40	05E101	FLOW AND PRESSURE CONTROL STATION MODIFICATIONS
		INSTRUMENTATION
41	00I001	INSTRUMENTATION LEGEND
42	02I601	GROUND STORAGE TANK NO. 1 P&ID
43	02I602	GROUND STORAGE TANK NO. 2 P&ID
44	03I601	REMOTE I/O DIGITAL INPUT CARDS MODIFICATIONS
45	03I602	MAIN PLC ANALOG INPUT CARDS AND ANALOG OUTPUT CARD MODIFICATIONS

AECOM

AECOM TECHNICAL SERVICES, INC.
19219 KATY FREEWAY, SUITE 100
HOUSTON, TEXAS 77094
WWW.AECOM.COM
TBPE REG. NO. F-3580

AECOM Project No.: 60592253

STATE OF TEXAS
MICHAEL J. ROLEN
55388
REGISTERED
PROFESSIONAL ENGINEER
06/28/2019

SAN JACINTO RIVER AUTHORITY
THE WOODLANDS DIVISION

SAN JACINTO RIVER AUTHORITY
SJRA
www.SJRA.net

GROUND STORAGE TANK NO. 2 AT WATER PLANT NO. 4

ISSUE	DATE	DESCRIPTION
0	06/28/2019	ISSUED FOR CONSTRUCTION

SJRA PROJECT NO: WDPR 0098.1001.2G002
FILE NAME: 00G002.dwg
DRAWN BY: J GARNER
CHECKED BY: K ZHENG
SCALE: NONE

GENERAL

INDEX OF SHEETS

SHEET 00G002
SEQ. 2 OF 45

AGENCY REVIEW SUBMITTAL GST NO. 2 AT WP NO. 4

FILE: P:_PWD\SJRA\60592253 - Well Rehab GST No. 2, WP 4\900 CAD, GIS\910-CAD\20-SHEETS\GENERAL\00G002.dwg LAYOUT: 00G002 DATE: 6/27/2019 3:17:19 PM BY: GARNERJ

MATERIALS IN PLAN/SECTION

- ACOUSTICAL CEILING TILE (SECTION)
- ASPHALT (PLAN OR SMALL-SCALE SECTION)
- ASPHALT (LARGE-SCALE SECTION)
- BATT INSULATION (SECTION)
- BRICK MASONRY (PLAN AND/OR SECTION)
- CHECKERED PLATE (PLAN)
- COHESIVE SOIL (SECTION)
- CONCRETE (PLAN AND/OR SECTION)
- CONCRETE MASONRY (PLAN AND/OR SECTION)
- DEMOLITION (PLAN AND/OR SECTION)
- EARTH (SECTION)
- FILTER POINT MAT (PLAN)
- FINISHED WOOD (SECTION)
- FLOWABLE FILL (SECTION)
- GLULAM LUMBER (SECTION)
- GRANULAR FILL (SECTION)
- GRATING (SECTION)
- GRATING (PLAN)
- GROUT (SECTION)
- GYPSUM BOARD (SECTION)
- LIME TREATED SOIL (SECTION)
- METAL (SECTION)
- ORIENTED STRAND BOARD (SECTION)
- PARTICLE BOARD (SECTION)
- PLYWOOD (LARGE-SCALE SECTION)
- PLYWOOD (SMALL-SCALE SECTION)
- PRECAST CONCRETE (PLAN AND/OR SECTION)
- RIGID INSULATION (SECTION)
- RIPRAP (PLAN AND/OR SECTION)
- SAND (SECTION)
- SOD (SECTION)
- WEEP JOINT MORTAR PROTECTION SYSTEM (SECTION)
- WOOD – CONTINUOUS (SECTION)
- WOOD BLOCKING (SECTION)

GENERAL SYMBOLOGY

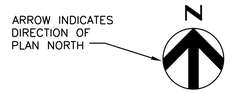

PLAN
1/4" = 1'-0"

PLAN TITLE

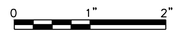

BORDER REFERENCE SCALE

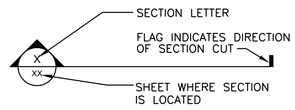

SECTION MARKER

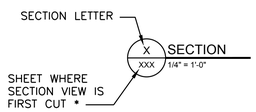

SECTION TITLE

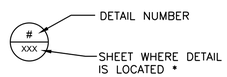

DETAIL MARKER

FOR REFERENCING DETAILS INCLUDED IN DRAWING SET.

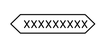

DETAIL MARKER

FOR REFERENCING DETAILS BOUND IN SPECIFICATIONS OR SEPARATE VOLUME.

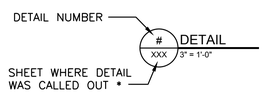

DETAIL TITLE

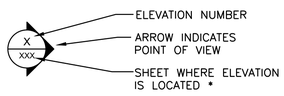

SINGLE ELEVATION OR PHOTO MARKER

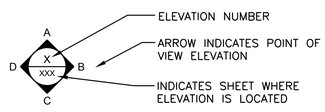

MULTIPLE ELEVATION OR PHOTO MARKER

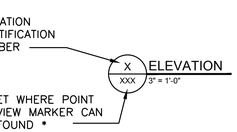

ELEVATION TITLE

* EXCEPTIONS WHERE THE SHEET NUMBER IS REPLACED BY A DASH (–).
1) FOR COMMON DETAILS, SECTIONS, ELEVATIONS OR DETAILS THAT ARE CUT OR CALLED OUT ON MULTIPLE SHEETS.
2) SECTIONS, ELEVATIONS OR DETAILS THAT ARE LOCATED ON THE SAME SHEET THEY ARE CUT OR CALLED OUT ON.

ARCHITECTURAL

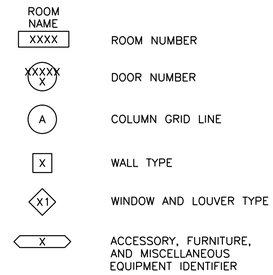

KEY NOTE DESIGNATION

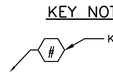

GENERAL LINE SYMBOLOGY

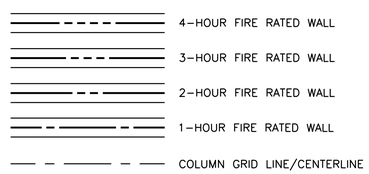

SHEET NAMING CONVENTION

AREA DESIGNATION

00	GENERAL
01	WATER PLANT SITE
02	GROUND STORAGE TANK
03	PUMP BUILDING
04	WATER WELL
05	FLOW/PRESSURE CONTROL STATION

DISCIPLINE DESIGNATOR & DISCIPLINE ORDER

G	GENERAL
V	SURVEYING/MAPPING
X	DEMOLITION OR EXISTING
C	CIVIL
L	LANDSCAPING
U	MULTI–DISCIPLINE
S	STRUCTURAL
B	BRIDGE
A	ARCHITECTURAL
D	PROCESS
M	MECHANICAL (HVAC)
P	PLUMBING
F	FIRE PROTECTION
E	ELECTRICAL
I	INSTRUMENTATION
T	TELECOM/SECURITY
CC	CORROSION CONTROL

DRAWING TYPE DESIGNATOR

0	GENERAL (SYMBOLS, LEGENDS)
1	PLANS
2	ELEVATIONS
3	SECTIONS
4	LARGE SCALE VIEWS
5	DETAILS
6	SCHEDULES AND DIAGRAMS
7	USER DEFINED
8	PROFILES
9	3D REPRESENTATIONS

EXAMPLE

GROUND STORAGE TANK, PROCESS PLAN VIEW, SHEET 01

0	2				

AREA DESIGNATION

		D			

DISCIPLINE DESIGNATOR

			1		

DRAWING TYPE DESIGNATOR

				0	1

SHEET NUMBER

GENERAL NOTES:

1. THIS IS A STANDARD SHEET SHOWING COMMON SYMBOLOGY. ALL SYMBOLS ARE NOT NECESSARILY USED ON THIS PROJECT.
2. SCREENING OR SHADING OF WORK IS USED TO INDICATE EXISTING COMPONENTS OR TO DE–EMPHASIZE PROPOSED IMPROVEMENTS TO HIGHLIGHT SELECTED TRADE WORK. REFER TO CONTEXT OF EACH SHEET FOR USAGE.

AGENCY REVIEW SUBMITTAL GST NO. 2 AT WP NO. 4

AECOM
AECOM TECHNICAL SERVICES, INC.
19219 KATY FREEWAY, SUITE 100
HOUSTON, TEXAS 77094
WWW.AECOM.COM
TBPE REG. NO. F–3580

AECOM Project No.: 60592253

STATE OF TEXAS
MICHAEL J. ROLEN
55388
REGISTERED PROFESSIONAL ENGINEER
06/28/2019

SAN JACINTO RIVER AUTHORITY
THE WOODLANDS DIVISION

SAN JACINTO RIVER AUTHORITY
SJRA
www.SJRA.net

GROUND STORAGE TANK NO. 2 AT WATER PLANT NO. 4

ISSUE	DATE	DESCRIPTION
0	06/28/2019	ISSUED FOR CONSTRUCTION

SJRA PROJECT NO: WDPR 0098.1001.2G002
FILE NAME: 00G003.dwg
DRAWN BY: J GARNER
CHECKED BY: K ZHENG
SCALE: NONE

GENERAL

LEGEND

SHEET 00G003
SEQ. 3 OF 45

FILE: P:_PWD\SJRA\60592253 – Well Rehab GST No. 2, WP 4\900 CAD, GIS\910–CAD\20–SHEETS\GENERAL\00G003.dwg LAYOUT: 00G003 DATE: 6/27/2019 3:17:32 PM BY: GARNERJ

EQUIPMENT CODES

CODE	DESCRIPTION
A	ANALYTICAL INSTRUMENT
AAH	ANALYTICAL ALARM HIGH
AAHH	ANALYTICAL ALARM HIGH HIGH
AAL	ANALYTICAL ALARM LOW
AALL	ANALYTICAL ALARM LOW LOW
AC	AIR COMPRESSOR
ACCL	ACCESS LADDER
ACU	AIR CONDITIONING UNIT
AD	AIR DRYER
AE	ANALYTICAL ELEMENT
AHU	AIR HANDLING UNIT
AIC	ANALYTICAL INDICATING CONTROLLER
AIT	ANALYTICAL INDICATING TRANSMITTER
ALT	ALTITUDE VALVE
APRV	AIR PRESSURE RELIEF VALVE
AR	AIR RECEIVER
ARV	AIR RELIEF VALVE
ASH	ANALYTICAL SWITCH HIGH
ASHH	ANALYTICAL SWITCH HIGH HIGH
ASL	ANALYTICAL SWITCH LOW
ASLL	ANALYTICAL SWITCH LOW LOW
AT	ANALYTICAL TRANSMITTER (BLIND)
AVV	AIR VACUUM VALVE
BC	BELT CONVEYOR
BCV	BALL CHECK VALVE
BF	BELT PRESS
BFP	BACKFLOW PREVENTOR
BFV	BUTTERFLY VALVE
BKR	BREAKER
BPV	BACK PRESSURE VALVE
BRC	BRIDGE CRANE
BS	BAR SCREEN
BT	BULK TOTE
BV	BALL VALVE
BWC	BACKWASH CLARIFIER
BWEB	BACKWASH EQUALIZATION BASIN
CAV	COMBINATION AIR VALVE
CC	CALIBRATION COLUMN
CCCC	CLOSED CIRCUIT CAMERA CONTROL
CCTV	CLOSED CIRCUIT TV
CHU	CHILLING UNIT
CL	CHLORINATOR (ON-SITE GENERATOR)
CR	CONTROL ROOM
CSL	CHLORINE SOLUTION LINE
CSV	CORPORATION STOP VALVE
CU	CONDENSER UNIT
CV	CHECK VALVE / SPRING LOADED CHECK VALVE
DAF	DISCHARGE AIR FILTER
DC	DAVIT CRANE
DMP	DUMPSTER VEYOR
DS	DISCHARGE SILENCER
DV	DIAPHRAGM VALVE
ED	EDUCTOR
ESEW	EMERGENCY SHOWER AND EYE WASH
EX	EXHAUST
FAH	FLOW ALARM HIGH
FAHH	FLOW ALARM HIGH HIGH
FAL	FLOW ALARM LOW
FALL	FLOW ALARM LOW LOW
FB	FLOCCULATION BASIN
FC	FLOW CONTROLLER
FCV	FLOW CONTROL VALVE
FDR	FEEDER (POLYMER)
FE	FLOW ELEMENT
FG	FLOW SIGHT GLASS
FH	FIRE HYDRANT
FI	FLOW INDICATOR
FIC	FLOW INDICATOR CONTROLLER

CODE	DESCRIPTION
FIL	FILTER (AIR)
FIRE	FIRE PROTECTION SYSTEM
FIT	FLOW INDICATING TRANSMITTER
FLC	FLOCCULATOR
FQ	FLOW TOTALIZER
FQC	FLOW TOTALIZER CONTROLLER
FQI	FLOW TOTALIZING INDICATOR
FR	FLOW RECORDER
FRC	FLOW RECORDER CONTROLLER
FS	FLOW SWITCH
FSH	FLOW SWITCH HIGH
FSHH	FLOW SWITCH HIGH HIGH
FSL	FLOW SWITCH LOW
FSLL	FLOW SWITCH LOW LOW
FV	FLAP VALVE
GATE	SECURITY GATE
GBH	GRAVITY BELT THICKENER HYDRATION UNIT
GBT	GRAVITY BELT THICKENER
GEN	GENERATOR
GLV	GLOBE VALVE
GST	GROUND STORAGE TANK
GV	GATE VALVE
H	HOIST
HB	HOSE BIB
HC	HAND (MANUAL) CONTROLLER
HIC	HAND INDICATING CONTROLLER
HPT	HYDRO-PNUEMATIC TANK
HE	HEAT EXCHANGER
HR	HOSE REEL
HS	HAND SWITCH
HT	HOIST TROLLEY
HV	HAND VALVE
HWP	HEATING WATER PUMP
I/P	CURRENT TO PNEUMATIC TRANSDUCER
IAF	INLET AIR FILTER
IAH	CURRENT ALARM HIGH
IAL	CURRENT ALARM LOW
ICP	INSTRUMENTATION CONTROL PANEL
IH	IMMERSION HEATER
II	CURRENT INDICATOR
IQ	INJECTION QUILL
IS	IRRIGATION SYSTEM
ISH	CURRENT SWITCH HIGH
ISL	CURRENT SWITCH LOW
ISW	INTERRUPTING SWITCH
IT	CURRENT TRANSMITTER
JC	JIB CRANE
KIC	TIME INDICATING CONTROLLER
KQI	TIME TOTAL INDICATION
LAH	LEVEL ALARM HIGH
LAHH	LEVEL ALARM HIGH HIGH
LAL	LEVEL ALARM LOW
LALL	LEVEL ALARM LOW LOW
LC	LEVEL CONTROLLER (BLIND)
LCV	LEVEL CONTROL VALVE
LE	LEVEL ELEMENT
LG	LEVEL GAUGE GLASS
LI	LEVEL INDICATOR
LIC	LEVEL INDICATING CONTROLLER
LIT	LEVEL INDICATING TRANSMITTER
LR	LEVEL RECORDER
LRC	LEVEL RECORDING CONTROLLER
LS	LEVEL SWITCH
LSH	LEVEL SWITCH HIGH
LSHH	LEVEL SWITCH HIGH HIGH
LSL	LEVEL SWITCH LOW
LSLL	LEVEL SWITCH LOW LOW
LSM	LEVEL SWITCH MID

CODE	DESCRIPTION
LT	LEVEL TRANSMITTER (BLIND)
MEM	MEMBRANE
METER	CONSUMPTION METER
MS	MOISTURE SEPARATOR
MU	MUFFLER
MX	MIXER
MV	MUD VALVE
MVO	MEDIUM VOLTAGE
NV	NEEDLE VALVE
OD	OVERHEAD DOOR
P	PUMP
P/I	PNEUMATIC TO CURRENT TRANSDUCER
PAB	PROCESS AIR BLOWER
PAH	PRESSURE ALARM HIGH
PAHH	PRESSURE ALARM HIGH HIGH
PAL	PRESSURE ALARM LOW
PALL	PRESSURE ALARM LOW LOW
PBU	POLYMER BLENDING UNIT
PC	PRESSURE CONTROLLER (BLIND)
PCV	PRESSURE CONTROL VALVE
PD	PULSATION DAMPNER
PDAH	PRESSURE DIFFERENTIAL ALARM HIGH
PDAHH	PRESSURE DIFFERENTIAL ALARM HIGH HIGH
PDAL	PRESSURE DIFFERENTIAL ALARM LOW
PDALL	PRESSURE DIFFERENTIAL ALARM LOW LOW
PDB	POSITIVE DISPLACEMENT BLOWER
PDC	PRESSURE DIFFERENTIAL CONTROLLER
PDI	PRESSURE DIFFERENTIAL INDICATOR
PDSH	PRESSURE DIFFERENTIAL SWITCH HIGH
PDSHH	PRESSURE DIFFERENTIAL SWITCH HIGH HIGH
PDI	PRESSURE DIFFERENTIAL INDICATOR
PDIC	PRESSURE DIFFERENTIAL INDICATOR CONTROLLER
PDS	PRESSURE DIFFERENTIAL SWITCH
PDSL	PRESSURE DIFFERENTIAL SWITCH LOW
PDSLL	PRESSURE DIFFERENTIAL SWITCH LOW LOW
PG	PRESSURE GAUGE
PIT	PRESSURE INDICATING TRANSMITTER
PLC	PROGRAMMABLE LOGIC CONTROLLER
PR	PRESSURE RECORDER
PRC	PRESSURE RECORDER CONTROLLER
PRD	PRESSURE RUPTURE DISK
PRGV	PRESSURE REGULATING VALVE
PRLV	PRESSURE RELIEF VALVE
PRV	PRESSURE REDUCING VALVE
PS	PLATE SETTLER
PSH	PRESSURE SWITCH HIGH
PSHH	PRESSURE SWITCH HIGH HIGH
PSL	PRESSURE SWITCH LOW
PSLL	PRESSURE SWITCH LOW LOW
PT	PRESSURE TRANSMITTER (BLIND)
PUS	PROXIMITY ULTRASOUND SENSOR
PV	PLUG VALVE
PWRC	POWER CENTER
RD	REEL DRIVE - SEDIMENTATION
RMX	RAPID MIXER
RES	RESERVOIR
RU	REFRIGERATION UNIT
SAL	SPEED ALARM LOW
SALL	SPEED ALARM LOW LOW
SB	SEDIMENTATION BASIN
SC	SPEED CONTROLLER
SCL	SCALE
SCO	SLUDGE CONDITIONER
SCR	SCREW CONVEYOR
SCS	SLUDGE COLLECTION SYSTEM
SE	SEDIMENTATION EQUIPMENT
SFRV	SAFETY RELEASE VALVE
SG	SLIDE GATE

CODE	DESCRIPTION
SH	SUCTION HEADER
SGL	SIGHT GLASS
SHT	SLUDGE HOLDING TANK
SHW	SHOWER
SI	SPEED INDICATION
SIC	SPEED INDICATING CONTROLLER
SLG	SLUICE GATE
SLT	SLUDGE THICKENER
SLV	SLUDGE LINE VENT
SM	STATIC MIXER
SMP	SAMPLE, SAMPLE LINE
SNK	SINK
SP	SUMP PUMP
SRV	SURGE RELIEF VALVE
SS	SELECTOR SWITCH
SSL	SPEED SWITCH LOW
SSLL	SPEED SWITCH LOW LOW
STR	STRAINER
SV	SOLENOID VALVE
SWE	SWING ELBOW
SWS	SAFETY WASH STATION
T	TANK
TAH	TEMPERATURE ALARM HIGH
TAHH	TEMPERATURE ALARM HIGH HIGH
TAL	TEMPERATURE ALARM LOW
TALL	TEMPERATURE ALARM LOW LOW
TC	TEMPERATURE CONTROLLER (BLIND)
TCEQ	TEXAS COMMISSION ON ENVIRONMENTAL QUALITY
TCV	TEMPERATURE CONTROLLER VALVE
TE	TEMPERATURE ELEMENT
TI	TEMPERATURE INDICATOR, TANK INLET
TIC	TEMPERATURE INDICATING CONTROLLER
TIT	TEMPERATURE INDICATING TRANSMITTER
TLH	TEMPERATURE LIMIT HIGH
TMX	TANK MIXER
TR	TRAIN
TRC	TEMPERATURE RECORDER CONTROLLER
TSH	TEMPERATURE SWITCH HIGH
TSHH	TEMPERATURE SWITCH HIGH HIGH
TSL	TEMPERATURE SWITCH LOW
TSLL	TEMPERATURE SWITCH LOW LOW
TT	TEMPERATURE TRANSMITTER (BLIND)
UA	MULTIVARIABLE ALARM
UH	UNIT HEATER
UPS	UNITERRUPTED POWER SOURCE
UR	URINAL
VAH	VIBRATION ALARM HIGH
VAHH	VIBRATION ALARM HIGH HIGH
VF	VENT FAN
VFD	VARIABLE FREQUENCY DRIVE
VI	VIBRATION INDICATION
VH	VAPOR HEATER
VSH	VIBRATION SWITCH HIGH
VSHH	VIBRATION SWITCH HIGH HIGH
WAH	TORQUE ALARM HIGH
WAHH	TORQUE ALARM HIGH HIGH
WH	WATER HEATER
WIT	WEIGHT INDICATING TRANSMITTER
WS	WATER SOFTENER
WSH	TORQUE SWITCH HIGH
WSHH	TORQUE SWITCH HIGH HIGH
WTPT	WATER TREATMENT PLANT TRANSFER
WTR	WATER FOUNTAIN
XA	UNCLASSIFIED ALARM
XAL	UNCLASSIFIED ALARM LIGHT
Y	CONVERTER
YA	EVENT ALARM
YAL	EVENT ALARM LIGHT

CODE	DESCRIPTION
YI	EVENT OR STATE INDICATOR
YRD	YARD
YS	"Y" STRAINER
YV	YARD VAULT
ZA	POSITION ALARM
ZAC	POSITION ALARM CLOSED
ZAO	POSITION ALARM OPEN

EQUIPMENT TAGGING

EQUIPMENT TAGGING:	DIVISION - FACILITY - AREA - SUBAREA - EQUIPMENT CODE - UNIT NUMBER - EQUIPMENT NUMBER
XX - XXXnn -XXXX - XXXX - XXXX -XX - XXXN	DIVISION (2 CHARACTERS)
XX - XXXnn -XXXX - XXXX - XXXX -XX - XXXN	FACILITY (2-3 CHARACTERS FOLLOWED BY 2 DIGITS)
XX - XXXnn -XXXX - XXXX - XXXX -XX - XXXN	AREA CODE (1-4 CHARACTERS)
XX - XXXnn -XXXX - XXXX - XXXX -XX - XXXN	SUBAREA CODE (1-4 CHARACTERS)
XX - XXXnn -XXXX - XXXX - XXXX -XX - XXXN	EQUIPMENT CODE (1-4 CHARACTERS)
XX - XXXnn -XXXX - XXXX - XXXX -XX - XXXN	UNIT NUMBER (2 DIGITS)
XX - XXXnn -XXXX - XXXX - XXXX -XX - XXXN	EQUIPMENT NUMBER (3 DIGITS, MAY INCLUDE ONE ADDITIONAL CHARACTER)

DIVISION CODES

DIVISION CODE	DIVISION
GR	GROUNDWATER REDUCTION PLAN DIVISION
HD	HIGHLANDS DIVISION
LC	LAKE CONROE DIVISION
WD	THE WOODLANDS DIVISION

FACILITY CODES

FACILITY CODE	FACILITY
SWP NN	SURFACE WATER TREATMENT PLANT NN
WRF NN	WATER RECEIVING FACILITY NN
WW NN	WATER WELL NN
GWP NN	GROUNDWATER PLANT NN
ET NN	ELEVATED TANK NN
STP NN	WASTEWATER TREATMENT PLANT NN
LS NN	WASTEWATER LIFT STATION NN
PRV NN	PRESSURE REDUCING VALVE NN

AREA CODES

AREA CODE	AREA DESCRIPTION
GEN	GENERAL
SITE	SITE
GST	GROUND STORAGE TANKS
PBLG	PUMP BUILDING

SUBAREA/UNIT/EQUIPMENT NUMBER

SITE - SITE	
UNIT NUMBER - GENERAL (SUBAREA - GEN)	
UNIT NUMBER	UNIT DESCRIPTION
00	GENERAL
PBLG - PUMP BUILDING	
UNIT NUMBER	UNIT DESCRIPTION
00	GENERAL
GST - GROUND STORAGE TANKS	
UNIT NUMBER - GENERAL (SUBAREA - GEN)	
UNIT NUMBER	UNIT DESCRIPTION
00	GENERAL
01	GROUND STORAGE TANK NO. 1
02	GROUND STORAGE TANK NO. 2
WATER WELLS	
UNIT NUMBER	UNIT DESCRIPTION
00	GENERAL
01	WATER WELL NO. 29
02	WATER WELL NO. 30

AECOM
AECOM TECHNICAL SERVICES, INC.
19219 KATY FREEWAY, SUITE 100
HOUSTON, TEXAS 77094
WWW.AECOM.COM
TBPE REG. NO. F-3580

AECOM Project No.: 60592253

STATE OF TEXAS
MICHAEL J. ROLEN
55388
REGISTERED PROFESSIONAL ENGINEER
06/28/2019

SAN JACINTO RIVER AUTHORITY
THE WOODLANDS DIVISION

GROUND STORAGE TANK NO. 2 AT WATER PLANT NO. 4

ISSUE	DATE	DESCRIPTION
0	06/28/2019	ISSUED FOR CONSTRUCTION

SJRA PROJECT NO: WDPR 0098.1001.2G002
FILE NAME: 00G004.dwg
DRAWN BY: J GARNER
CHECKED BY: K ZHENG
SCALE: NONE

GENERAL

TAGGING CONVENTION 1

SHEET 00G004
SEQ. 4 OF 45

AGENCY REVIEW SUBMITTAL GST NO. 2 AT WP NO. 4

FILE: P:_PWD\SJRA\60592253 - Well Rehab GST No. 2, WP 4\900 CAD, GIS\910-CAD\20-SHEETS\GENERAL\00G004.dwg LAYOUT: 00G004 DATE: 6/27/2019 3:17:44 PM BY: GARNERJ

PIPE TAGGING

PIPING TAGGING:	PIPE SIZE – SERVICE ABBREVIATION
XX–XX	PIPE SIZE (1–2 DIGITS)
XX– XXX	PIPE SERVICE (2–3 CHARACTERS)
PIPE SERVICE	
SEE PIPE SERVICE ABBREVIATIONS	

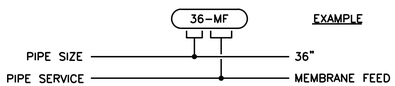

PIPE SERVICE ABBREVIATIONS

MAJOR PROCESS PIPING

DH	DISCHARGE HEADER
FIL	MEMBRANE FILTRATE
FM	FORCE MAIN
FW	FINISHED WATER
GE	GAC EFFLUENT
MF	MEMBRANE FEED
OW	PROC WATER RECOVERY BASIN RETURN
PD	PUMP DISCHARGE LINE
PS	PUMP SUCTION LINE
PW	POTABLE WATER
RW	RAW WATER
SAN	SANITARY SEWER LINE
SD	STORM DRAIN
SW	SURFACE WATER LINE
TL	TRANSMISSION LINE
WCLB	WELL COLLECTION LINE BURIED
WTPT	WATER TREATMENT PLANT TRANSFER LINE

GROUND STORAGE TANK PIPING

DR	DRAIN
OF	OVERFLOW
SH	SUCTION HEADER
TI	TANK INLET
TT	TANK TO TANK CONNECTION

OTHER PROCESS PIPING

AS	AIR SCOUR
BWS	BACKWASH SUPPLY
BWW	BACKWASH WASTE
CA	COMPRESSED AIR
CH	CHEMICAL SOLUTION HEADER
CHV	CHEMICAL VENT
CIPS/D	CIP SUPPLY/ DRAIN
CIPR	CIP RETURN
CNA	CONTROL AIR
CSL	CHLORINE SOULTION LINE
CTW	CONTACTOR–TO–WASTE
CW	COLD WATER (POTABLE)
DR	DRAIN
FIRE	FIRE HYDRANT SUPPLY
FM	FORCE MAIN
HW	HOT WATER (POTABLE)
IW	IRRIGATION WATER
LPA	LOW PRESSURE AIR
MIX	NEUTRALIZATION RECIRCULATION
NPW	NON–POTABLE WATER
OF	OVERFLOW DRAIN
PA	PROCESS AIR
RFS	REVERSE FILTRATION SUPPLY
RFW	REVERSE FILTRATION (AND AIR SCOUR) WASTE
SAN	WASTEWATER
SF	SLUDGE RELIEF
SLW	SLURRY WATER SUPPLY
SM	SAMPLE
SMD	SAMPLE DRAIN
SMP	SAMPLE LINE
SR	SURGE RELIEF
STM	STORM DRAIN
SVW	SERVICE / PROCESS WATER
VT	VENT
VTR	VENT THROUGH ROOF
WS	SOFTENED WATER

CHEMICAL PIPING

ACH	ALUMINUM CHLOROHYDRATE
CDG	CARBON DIOXIDE GAS
CDS	CARBON DIOXIDE SOLUTION
CL	SODIUM HYPOCHLORITE
CSU	COPPER SULFATE
CTA	CITRIC ACID
GAC	GAC SLURRY
HY	HYDROGEN VENT
LS	LIME SLURRY
PHA	PHOSPHORIC ACID
POL	POLYMER
SBS	SODIUM BISULFATE
SHY	SODIUM HYDROXIDE
SP	SODIUM PERMANGANATE

AGENCY REVIEW SUBMITTAL GST NO. 2 AT WP NO. 4

AECOM
AECOM TECHNICAL SERVICES, INC.
19219 KATY FREEWAY, SUITE 100
HOUSTON, TEXAS 77094
WWW.AECOM.COM
TBPE REG. NO. F–3580

AECOM Project No.: 60592253

STATE OF TEXAS
MICHAEL J. ROLEN
55388
REGISTERED
PROFESSIONAL ENGINEER
06/28/2019

SAN JACINTO RIVER AUTHORITY
THE WOODLANDS DIVISION

GROUND STORAGE TANK NO. 2 AT WATER PLANT NO. 4

ISSUE	DATE	DESCRIPTION
0	06/28/2019	ISSUED FOR CONSTRUCTION

SJRA PROJECT NO: WDPR 0098.1001.2G002
FILE NAME: 00G005.dwg
DRAWN BY: J GARNER
CHECKED BY: K ZHENG
SCALE: NONE

GENERAL

TAGGING CONVENTION 2

SHEET 00G005
SEQ. 5 OF 45

GENERAL CONSTRUCTION NOTES:

1. THERE WILL BE NO SEPARATE PAYMENT FOR WORK SHOWN ON THESE PLANS, UNLESS SPECIFICALLY ESTABLISHED IN THE BID SECTION OF THE CONTRACT DOCUMENTS. CONTRACTOR SHALL INCLUDE COST OF THIS WORK IN THE CONTRACT UNIT PRICE FOR ITEMS OF WHICH THIS WORK IS A COMPONENT OR INCIDENTAL.
2. SJRA UTILITIES ARE NOT PART OF THE 811 LOCATES.
3. CONTRACTOR SHALL COMPLY WITH ALL FEDERAL, STATE, AND LOCAL LAWS AND ALL REGULATIONS OF UTILITY COMPANIES CONCERNING SAFETY AND HEALTH PRACTICES.
4. CONTRACTOR SHALL REMOVE ALL MUD, DIRT AND DEBRIS DEPOSITED OR DROPPED ON EXISTING PAVEMENT DUE TO HIS CONSTRUCTION ACTIVITY DAILY. MATERIAL THAT IS HAZARDOUS TO TRAFFIC SHALL BE REMOVED IMMEDIATELY.
5. THESE PLANS DO NOT EXTEND TO OR INCLUDE DESIGNS OR SYSTEMS PERTAINING TO THE SAFETY OF THE CONTRACTOR OR ITS EMPLOYEES, AGENTS, OR REPRESENTATIVES IN THE PERFORMANCE OF THE WORK. THE SEAL OF THE LICENSED PROFESSIONAL ENGINEER(S) HEREON DOES NOT EXTEND TO ANY SUCH SAFETY SYSTEMS THAT MAY NOW OR HEREAFTER BE INCORPORATED IN THESE PLANS. THE CONTRACTOR SHALL PREPARE OR OBTAIN THE APPROPRIATE SAFETY SYSTEM(S).
6. CONTRACTOR SHALL PROTECT ALL TREES ADJACENT TO WORK AREA. NO TREES OUTSIDE THE WORK AREA SHALL BE REMOVED WITHOUT PERMISSION OF OWNER.
7. CONTRACTOR SHALL GIVE NOTICE TO ALL AUTHORIZED INSPECTORS, SUPERINTENDENTS, OR PERSONS IN CHARGE OF PRIVATE AND PUBLIC UTILITIES OR RAILROADS AFFECTED BY HIS OPERATIONS PRIOR TO COMMENCEMENT OF WORK. CONTRACTOR SHALL OBTAIN ALL CONSTRUCTION PERMITS PRIOR TO STARTING CONSTRUCTION.
8. CONTRACTOR SHALL OBTAIN ALL PERMITS REQUIRED BY REGULATION OF MONTGOMERY COUNTY, TEXAS FOR FLOOD PLAIN MANAGEMENT PRIOR TO STARTING CONSTRUCTION.
9. MONTGOMERY COUNTY ENGINEERING DEPARTMENT SHALL BE NOTIFIED BY WRITTEN NOTIFICATION BY THE CONTRACTOR 48 HOURS IN ADVANCE OF STARTING CONSTRUCTION, FOLLOWED BY TELEPHONE NOTIFICATION 24 HOURS IN ADVANCE OF STARTING CONSTRUCTION.
10. CONTRACTOR SHALL NOTIFY THE SAN JACINTO RIVER AUTHORITY CONSTRUCTION MANAGER IN WRITING AT LEAST 48 HOURS PRIOR TO START OF CONSTRUCTION.
11. CONTRACTOR SHALL NOTIFY MARSHALL JORDAN WITH THE WOODLANDS TOWNSHIP IN WRITING AND BY PHONE AT 281-210-3815 (OFFICE) OR 832-381-6887 (CELL) AT LEAST 48 HOURS PRIOR TO START OF CONSTRUCTION.
12. A COPY OF ALL WRITTEN NOTIFICATIONS SHALL BE SENT TO THE SJRA WITH A COPY TO THE ENGINEER.
13. FINAL SITE GRADING TO TRANSITION SMOOTHLY BETWEEN CONTOURS AS SHOWN ON PLANS.
14. CONTRACTOR WILL TAKE ALL DUE PRECAUTIONS TO PROTECT EXISTING FACILITIES FROM DAMAGE. THE CONTRACTOR WILL BE FULLY RESPONSIBLE FOR ANY DAMAGES INCURRED AS A RESULT OF CONSTRUCTION OPERATIONS.
15. CONTRACTOR TO REMOVE PLUGS AND CONNECT TO EXISTING LINES OR PROVIDE WATERTIGHT PLUGS FOR ALL LINES TERMINATING IN THIS CONTRACT.
16. CONTRACTOR SHALL BE RESPONSIBLE FOR SECURITY OF WORK SITE AND LAYDOWN AREA FOR EQUIPMENT AND MATERIALS USED ON THIS CONTRACT.
17. PLANS AND SPECIFICATIONS SHALL NOT BE SUBSTANTIALLY OR MATERIALLY ALTERED WITHOUT PRIOR APPROVAL OF THE TCEQ.
18. CONTRACTOR TO RESTRICT LAYDOWN AREA TO NON-PAVED AREAS DURING CONSTRUCTION ON THE PLANT SITE AND AVOID ANY AREAS SJRA OPERATORS NEED OPEN FOR PLANT OPERATION.
19. NO PLANT SHUTDOWNS ARE ALLOWED UNLESS APPROVED BY THE SJRA 72 HOURS AHEAD OF TIME, THE CONTRACTOR IS NOT ALLOWED TO OPERATE SJRA VALVES OR EQUIPMENT. CONTRACTOR IS TO COORDINATE VALVE AND EQUIPMENT OPERATION WITH THE SJRA.
20. CONTRACTOR SHALL RESTORE THE SITE TO EXISTING CONDITIONS OR BETTER TO THE SATISFACTION OF THE SJRA.
21. CONTRACTOR IS RESPONSIBLE FOR OFFSITE DISPOSAL OF DEMOLITION DEBRIS AND REFUSE AT NO ADDITIONAL COST TO THE OWNER.
22. CONTRACTOR SHALL PROTECT AND/OR BRACE ALL UTILITY POLES AND OTHER STRUCTURES WITHIN AND ADJACENT TO THE WORK ZONE, AS NECESSARY TO COMPLETE THE WORK. CONTRACTOR MUST CONTACT THE UTILITY POLE OWNER AND PROVIDE A PROTECTION OR BRACING PLAN FOR APPROVAL BY THE UTILITY OWNER.
23. COORDINATE WITH PROPERTY OWNERS TO DETERMINE FOOTING DEPTH FOR ANY SIGNS. MAINTAIN A MINIMUM 1 FOOT CLEARANCE FROM SIGN.
24. CONTRACTOR SHALL NOTIFY THE WOODLANDS WATER AGENCY IN WRITING AND BY PHONE AT 855-426-7283 AT LEAST 48 HOURS PRIOR TO START OF CONSTRUCTION AS APPLICABLE.
25. REFER TO SPECIFICATION 01 35 05 - ENVIRONMENTAL PROTECTION AND SPECIAL CONTROLS FOR REQUIREMENTS FOR DUST, NOISE AND OTHER POLLUTION CONTROLS DUE TO CONTRACTOR'S WORK.
26. CONTRACTOR SHALL PERFORM ALL WORK AS GENERALLY IDENTIFIED IN SPECIFICATION SECTION 01 11 13 - WORK COVERED BY CONTRACT DOCUMENTS AND AS FURTHER DETAILED IN THE CONTRACT DOCUMENTS.
27. CONTRACTOR IS RESPONSIBLE FOR VERIFYING ALL DIMENSIONS AND ELEVATIONS PRIOR TO INITIATING WORK AND SHALL PROVIDE A RECORD OF ALL FIELD SURVEYS TO THE OWNER.
28. THE SITE SHALL REMAIN IN A CLEAN AND ORDERLY MANNER, GRADED TO DRAIN, WITH STORM WATER CONTROLS, AND SEDIMENT COLLECTION SYSTEMS NO SOIL SHALL BE PLACED IN THE 100 YEAR FLOODPLAIN IF SHOWN ON SITE.
29. SITE TO REMAIN FENCED AT ALL TIMES. CONTRACTOR TO PROVIDE TEMPORARY BARRICADE FENCING IN LIEU OF PERMANENT FENCING WHEN NECESSARY.
30. ALL DRAINAGE SWALES AND DITCHES ARE TO BE RESTORED TO ORIGINAL CONDITIONS.
31. THE CONTRACTOR SHALL RESTORE ALL ADJACENT PROPERTY DISTURBED BY CONSTRUCTION TO THE SATISFACTION OF THE SJRA AND THE ADJACENT PROPERTY OWNERS.
32. CONTRACTOR IS TO PROTECT EXISTING SJRA EQUIPMENT. IF SJRA EQUIPMENT IS DAMAGED, THE CONTRACTOR SHALL, AT HIS EXPENSE, REPLACE SJRA EQUIPMENT TO THE SATISFACTION OF THE SJRA.

WATER LINE CONSTRUCTION NOTES:

1. CONTRACTOR SHALL ALLOW A MINIMUM OF 2-FOOT VERTICAL AND 4-FOOT HORIZONTAL CLEARANCE BETWEEN PROPOSED WATER LINES AND OTHER UTILITIES.
2. WHEN A WATER LINE IS PLACED NEAR A SANITARY SEWER MANHOLE, IT SHALL HAVE A MINIMUM OF 9 FEET WALL TO WALL SEPARATION. WHERE A WATER LINE PARALLELS A SANITARY SEWER, 9 FEET OF SEPARATION WILL BE MAINTAINED IN ALL DIRECTIONS. IF THE 9-FOOT SEPARATION CANNOT BE ACHIEVED, BOTH THE SEWER PIPE AND JOINTS SHALL HAVE PRESSURE RATING OF 150 P.S.I. AND MANHOLES SHALL BE WATER TIGHT. THE VERTICAL SEPARATION SHALL BE A MINIMUM OF 2 FEET BETWEEN OUTSIDE DIAMETERS AND THE HORIZONTAL SEPARATION SHALL BE MINIMUM OF 4 FEET BETWEEN OUTSIDE DIAMETERS. THE SEWER SHALL BE LOCATED BELOW THE WATER LINE.
3. SEPARATION DISTANCES FOR INSTALLATION OF POTABLE WATER DISTRIBUTION LINES AND WASTEWATER COLLECTION LINES, WASTEWATER FORCE MAINS AND OTHER CONVEYANCES/APPURTENANCES IDENTIFIED AS POTENTIAL SOURCES OF CONTAMINATION MUST CONFORM TO CURRENT COMMISSION (TCEQ) RULES.
   A. WHEN A NEW WATER LINE CROSSES UNDER A WASTEWATER MAIN OR LATERAL, THE WATER LINE SHALL BE ENCASED OR CONSTRUCTED OF DUCTILE IRON OR STEEL PIPE WITH MECHANICAL OR WELDED JOINTS AS APPROPRIATE. WHEN ENCASED, ALL SECTIONS OF WASTEWATER MAIN OR LATERAL WITHIN NINE FEET HORIZONTALLY OF THE WATER LINE SHALL BE ENCASED IN AN 18-FOOT (OR LONGER) SECTION OF PIPE. FLEXIBLE ENCASED PIPE SHALL HAVE A MINIMUM PIPE STIFFNESS OF 115 PSI AT 5.0% DEFLECTION. THE ENCASED PIPE SHALL BE CENTERED ON THE WATER LINE AND SHALL BE AT LEAST TWO NOMINAL PIPE DIAMETERS LARGER THAN THE WASTEWATER MAIN OR LATERAL. THE SPACE AROUND THE CARRIER PIPE SHALL BE SUPPORTED AT FIVE-FOOT (OR LESS) INTERVALS WITH SPACERS OR BE FILLED TO THE SPRINGLINE WITH WASHED SAND. EACH END OF THE CASING SHALL BE SEALED WITH WATERTIGHT NON-SHRINK CEMENT GROUT OR A MANUFACTURED WATERTIGHT SEAL. AN ABSOLUTE MINIMUM SEPARATION DISTANCE OF SIX INCHES BETWEEN THE ENCASEMENT PIPE AND THE WATER LINE SHALL BE PROVIDED. AN ABSOLUTE MINIMUM SEPARATION DISTANCE OF ONE FOOT BETWEEN THE WATER LINE AND THE WASTEWATER MAIN OR LATERAL SHALL BE PROVIDED. BOTH THE WATER LINE AND WASTEWATER MAIN OR LATERAL MUST PASS A PRESSURE AND LEAKAGE TEST AS SPECIFIED IN AWWA C600 STANDARDS.
   B. WHERE A NEW POTABLE WATER LINE CROSSES AN EXISTING, PRESSURE RATED WASTEWATER MAIN OR LATERAL, ONE SEGMENT OF THE WATER LINE PIPE SHALL BE CENTERED OVER THE WASTEWATER MAIN OR LATERAL SUCH THAT THE JOINTS OF THE WATER LINE PIPE ARE EQUIDISTANT AND AT LEAST NINE FEET HORIZONTALLY FROM THE CENTERLINE OF THE WASTEWATER MAIN OR LATERAL. THE POTABLE WATER LINE SHALL BE AT LEAST SIX INCHES ABOVE THE WASTEWATER MAIN OR LATERAL. WHENEVER POSSIBLE, THE CROSSING SHALL BE CENTERED BETWEEN THE JOINTS OF THE WASTEWATER MAIN OR LATERAL. IF THE EXISTING WASTEWATER MAIN OR LATERAL SHOWS SIGNS OF LEAKING, IT SHALL BE REPLACED FOR AT LEAST NINE FEET IN BOTH DIRECTIONS (18 FEET TOTAL) WITH AT LEAST 150 PSI PRESSURE RATED PIPE.
4. ADEQUATE DRAINAGE SHALL BE MAINTAINED AT ALL TIMES DURING CONSTRUCTION AND ANY DRAINAGE DITCH OR STRUCTURE DISTURBED DURING CONSTRUCTION SHALL BE RESTORED TO THE SATISFACTION OF THE SJRA. ALL CONSTRUCTION STORM RUNOFF SHALL COMPLY WITH THE STORM WATER MANAGEMENT HANDBOOK FOR CONSTRUCTION ACTIVITIES, PREPARED BY THE CITY OF HOUSTON, HARRIS COUNTY, AND HARRIS COUNTY FLOOD CONTROL DISTRICT, AND SHALL BE IN COMPLIANCE WITH THE TEXAS POLLUTANT DISCHARGE ELIMINATION SYSTEM (TPDES) REQUIREMENTS.
5. ALL VALVES WITHIN PLANT SITE OPEN COUNTER CLOCKWISE. VALVES OUTSIDE OF PLANT OPEN CLOCKWISE.
6. CONTRACTOR SHALL CONTACT AND COORDINATE WITH THE DISTRICT OPERATOR PRIOR TO MAKING ANY CONNECTIONS TO THE EXISTING WATER LINES OR ANYTIME A VALVE ON AN EXISTING WATER LINE IS TO BE OPENED OR CLOSED.

   DISTRICT NAME: SAN JACINTO RIVER AUTHORITY - WOODLANDS
   OPERATOR COMPANY: SAN JACINTO RIVER AUTHORITY - WOODLANDS
   OPERATOR CONTACT: JAMES SMALLWOOD OR JASON WILLIAMS
   CONTACT PHONE NO.: 281-367-9511

WATER FOR CONSTRUCTION NOTE:

1. OWNER WILL PROVIDE PRE-CHLORINATED WATER FOR GROUND STORAGE TANK CONSTRUCTION. CONTRACTOR SHALL PROVIDE METER AND REDUCED PRESSURE ZONE BACKFLOW PREVENTER FOR TEMPORARY FACILITIES.

PAVING CONSTRUCTION NOTES:

1. ALL ROAD WIDTHS, CURB RADII AND CURVE ALIGNMENT SHOWN INDICATES BACK OF CURB. T.C. INDICATES TOP OF CURB ELEVATION AND T.P. INDICATES TOP OF PAVEMENT ELEVATION.
2. WHERE PROPOSED PAVEMENT IS TO MATCH EXISTING PAVEMENT, EXISTING REBARS OR DOWELS PROJECTING FROM EXISTING PAVEMENT TO BE CLEANED AND TIED INTO PROPOSED PAVEMENT. IF NO REINFORCING STEEL EXISTS, USE HORIZONTAL DOWELS. HORIZONTAL DOWELS SHALL BE #6 BARS, 24 INCHES LONG, DRILLED AND EMBEDDED 8 INCHES INTO THE CENTER OF THE EXISTING SLAB WITH "PO ROC EPOXY" OR EQUAL AT 18 INCHES CENTER TO CENTER.
3. CLEAN CONCRETE DUST FROM DRILLED HOLES.

PIPING CONSTRUCTION NOTES:

1. UNLESS OTHERWISE NOTED, PIPE CONSTRUCTION, MATERIALS, AND TESTING TO BE IN ACCORDANCE WITH APPLICABLE SPECIFICATION SECTION.
2. ALL UNDERGROUND WATERLINE PIPE CONSTRUCTION, VALVES, TESTING, AND MATERIALS TO BE IN ACCORDANCE WITH APPLICABLE SPECIFICATION SECTION. CONTRACTOR TO PROVIDE ADEQUATE CONCRETE THRUST BLOCKING AT ALL TEES, WYES, BENDS, CROSSES, FLUSHING VALVES, VALVES, AND OFFSETS TO WITHSTAND TEST PRESSURE AS SPECIFIED.
3. CONNECTIONS 2-INCH AND SMALLER TO STEEL PIPE TO BE MADE WITH 3,000-POUND FORGED STEEL COUPLINGS. CONNECTIONS 2-INCH AND SMALLER TO DUCTILE IRON PIPE TO BE MADE WITH DOUBLE STRAP SERVICE SADDLES, ROCKWELL 313 OR EQUAL, UNLESS OTHERWISE SHOWN.
4. STEEL PIPING SMALLER THAN 3" TO HAVE THREADED JOINTS. PVC PIPING TO BE SCH. 80 WITH SOLVENT WELD JOINTS, UNLESS OTHERWISE NOTED.
5. EXPOSED PIPING 8" AND SMALLER TO BE INSULATED.
6. ALL ABOVEGROUND METAL PIPING (EXCEPT GALVANIZED PIPING) TO BE PAINTED UNLESS OTHERWISE NOTED.
7. ALL PIPE NIPPLES AND FITTINGS 3" AND SMALLER TO BE 316 STAINLESS STEEL, UNLESS OTHERWISE NOTED.

SITE WORK AND DRAINAGE CONSTRUCTION NOTES:

1. FLOODING: CONTRACTOR SHALL NOT FLOOD THE PROJECT SITE AT ANY TIME. PROVIDE TEMPORARY FACILITIES TO ADEQUATELY DRAIN THE PROJECT AREA.
2. THE CONTRACTOR WILL BE RESPONSIBLE FOR CLEARING AND GRUBBING OF THE PROJECT AREA.
3. CONTRACTOR SHALL HYDRO-MULCH SEED ALL AREAS OF THE SITE NOT COVERED BY STRUCTURES OR PAVEMENT, INCLUDING THE ACCESS ROAD EASEMENT, AND ALL OTHER AREAS DISTURBED BY THE CONTRACTOR.
4. ADEQUATE DRAINAGE SHALL BE MAINTAINED AT ALL TIMES DURING CONSTRUCTION AND ANY DRAINAGE DITCH OR STRUCTURE DISTURBED DURING CONSTRUCTION SHALL BE RESTORED TO THE SATISFACTION OF THE OWNING AUTHORITY. ALL CONSTRUCTION STORM RUNOFF SHALL COMPLY WITH THE NATIONAL POLLUTANT DISCHARGE ELIMINATION SYSTEM (NPDES) AND MONTGOMERY COUNTY REQUIREMENTS.

AECOM
AECOM TECHNICAL SERVICES, INC.
19219 KATY FREEWAY, SUITE 100
HOUSTON, TEXAS 77094
WWW.AECOM.COM
TBPE REG. NO. F-3580

AECOM Project No.: 60592253

STATE OF TEXAS
MICHAEL J. ROLEN
55388
REGISTERED PROFESSIONAL ENGINEER
06/28/2019

SAN JACINTO RIVER AUTHORITY
THE WOODLANDS DIVISION

GROUND STORAGE TANK NO. 2 AT WATER PLANT NO. 4

ISSUE	DATE	DESCRIPTION
0	06/28/2019	ISSUED FOR CONSTRUCTION

SJRA PROJECT NO: WDPR 0098.1001.2G002
FILE NAME: 00G006.dwg
DRAWN BY: J GARNER
CHECKED BY: K ZHENG
SCALE: NONE

GENERAL

CONSTRUCTION NOTES

SHEET 00G006
SEQ. 6 OF 45

AGENCY REVIEW SUBMITTAL GST NO. 2 AT WP NO. 4

FILE: P:_PWD\SJRA\60592253 - Well Rehab GST No. 2, WP 4\900 CAD, GIS\910-CAD\20-SHEETS\GENERAL\00G006.dwg LAYOUT: 00G006 DATE: 6/27/2019 3:18:10 PM BY: GARNERJ

Revised February 2019

TEXAS COMMISSION ON ENVIRONMENTAL QUALITY
WATER DISTRIBUTION SYSTEM
GENERAL CONSTRUCTION NOTES

1. This water distribution system must be constructed in accordance with the current Texas Commission on Environmental Quality (TCEQ) Rules and Regulations for Public Water Systems 30 Texas Administrative Code (TAC) Chapter 290 Subchapter D. When conflicts are noted with local standards, the more stringent requirement shall be applied. At a minimum, construction for public water systems must always meet TCEQ's "Rules and Regulations for Public Water Systems."

2. All newly installed pipes and related products must conform to American National Standards Institute (ANSI)/NSF International Standard 61 and must be certified by an organization accredited by ANSI [§290.44(a)(1)].

3. Plastic pipe for use in public water systems must bear the NSF International Seal of Approval (NSF-pw) and have an ASTM design pressure rating of at least 150 psi or a standard dimension ratio of 26 or less [§290.44(a)(2)].

4. No pipe which has been used for any purpose other than the conveyance of drinking water shall be accepted or relocated for use in any public drinking water supply [§290.44(a)(3)].

5. All water line crossings of wastewater mains shall be perpendicular [§290.44(e)(4)(B)].

6. Water transmission and distribution lines shall be installed in accordance with the manufacturer's instructions. However, the top of the water line must be located below the frost line and in no case shall the top of the water line be less than 24 inches below ground surface [§290.44(a)(4)].

7. The maximum allowable lead content of pipes, pipe fittings, plumbing fittings, and fixtures is 0.25 percent [§290.44(b)].

8. The contractor shall install appropriate air release devices with vent openings to the atmosphere covered with 16-mesh or finer, corrosion resistant screening material or an acceptable equivalent [§290.44(d)(1)].

9. The contractor shall not place the pipe in water or where it can be flooded with water or sewage during its storage or installation [§290.44(f)(1)].

10. When waterlines are laid under any flowing or intermittent stream or semi-permanent body of water the waterline shall be installed in a separate watertight pipe encasement. Valves must be provided on each side of the crossing with facilities to allow the underwater portion of the system to be isolated and tested [§290.44(f)(2)].

11. Pursuant to 30 TAC §290.44(a)(5), the hydrostatic leakage rate shall not exceed the amount allowed or recommended by the most current AWWA formulas for PVC pipe, cast iron and ductile iron pipe. Include the formulas in the notes on the plans.

    - The hydrostatic leakage rate for polyvinyl chloride (PVC) pipe and appurtenances shall not exceed the amount allowed or recommended by formulas in America Water Works Association (AWWA) C-605 as required in 30 TAC §290.44(a)(5). Please ensure that the formula for this calculation is correct and most current formula is in use;

$$Q = \frac{LD\sqrt{P}}{148{,}000}$$

Where:
- Q = the quantity of makeup water in gallons per hour,
- L = the length of the pipe section being tested, in feet,
- D = the nominal diameter of the pipe in inches, and
- P = the average test pressure during the hydrostatic test in pounds per square inch (psi).

    - The hydrostatic leakage rate for ductile iron (DI) pipe and appurtenances shall not exceed the amount allowed or recommended by formulas in America Water Works Association (AWWA) C-600 as required in 30 TAC §290.44(a)(5). Please ensure that the formula for this calculation is correct and most current formula is in use;

$$L = \frac{SD\sqrt{P}}{148{,}000}$$

Where:
- L = the quantity of makeup water in gallons per hour,
- S = the length of the pipe section being tested, in feet,
- D = the nominal diameter of the pipe in inches, and
- P = the average test pressure during the hydrostatic test in pounds per square inch (psi).

12. The contractor shall maintain a minimum separation distance in all directions of nine feet between the proposed waterline and wastewater collection facilities including manholes. If this distance cannot be maintained, the contractor must immediately notify the project engineer for further direction. Separation distances, installation methods, and materials utilized must meet §290.44(e)(1)-(4).

13. The separation distance from a potable waterline to a wastewater main or lateral manhole or cleanout shall be a minimum of nine feet. Where the nine-foot separation distance cannot be achieved, the potable waterline shall be encased in a joint of at least 150 psi pressure class pipe at least 18 feet long and two nominal sizes larger than the new conveyance. The space around the carrier pipe shall be supported at five-foot intervals with spacers or be filled to the springline with washed sand. The encasement pipe shall be centered on the crossing and both ends sealed with cement grout or manufactured sealant [§290.44(e)(5)].

14. Fire hydrants shall not be installed within nine feet vertically or horizontally of any wastewater line, wastewater lateral, or wastewater service line regardless of construction [§290.44(e)(6)].

Revised February 2019

TEXAS COMMISSION ON ENVIRONMENTAL QUALITY
WATER DISTRIBUTION SYSTEM
GENERAL CONSTRUCTION NOTES (CONTINUATION)

15. Suction mains to pumping equipment shall not cross wastewater mains, wastewater laterals, or wastewater service lines. Raw water supply lines shall not be installed within five feet of any tile or concrete wastewater main, wastewater lateral, or wastewater service line [§290.44(e)(7)].

16. Waterlines shall not be installed closer than ten feet to septic tank drainfields [§290.44(e)(8)].

17. The contractor shall disinfect the new waterlines in accordance with AWWA Standard C-651-14 or most recent, then flush and sample the lines before being placed into service. Samples shall be collected for microbiological analysis to check the effectiveness of the disinfection procedure which shall be repeated if contamination persists. A minimum of one sample for each 1,000 feet of completed waterline will be required or at the next available sampling point beyond 1,000 feet as designated by the design engineer [§290.44(f)(3)].

18. Dechlorination of disinfecting water shall be in strict accordance with current AWWA Standard C655-09 or most recent.

Revised February 2019

TEXAS COMMISSION ON ENVIRONMENTAL QUALITY
GROUND STORAGE TANK
GENERAL CONSTRUCTION NOTES

1. The water storage tank must be constructed in accordance with the current Texas Commission on Environmental Quality (TCEQ) Rules and Regulations for Public Water Systems 30 Texas Administrative Code (TAC) Chapter 290 Subchapter D. When conflicts are noted with local standards, the more stringent requirement shall be applied. At a minimum, construction for public water systems must always meet TCEQ's "Rules and Regulations for Public Water Systems."

2. All facilities for potable water storage shall be covered and designed, fabricated, erected, tested and disinfected in strict accordance with current American Water Works Association (AWWA) standards and shall be provided with the minimum number, size and type of roof vents, man ways, drains, sample connections, access ladders, overflows, liquid level indicators on-site, and other appurtenances as specified in these rules.

3. Disinfection of water storage facilities shall be in strict accordance with current AWWA Standard C652-11 or most recent.

4. Dechlorination of disinfecting water shall be in strict accordance with current AWWA Standard C655-09 or most recent.

5. Bolted tanks shall be designed, fabricated, erected and tested in strict accordance with current AWWA Standard D103. Welded tanks shall be designed, fabricated, erected and tested in strict accordance with current AWWA Standard D100. The roof of all metal tanks shall be designed and erected so that no water ponds at any point on the roof and, in addition, no area of the roof shall have a slope of less than 0.75 inch per foot. Concrete tank roofs shall be constructed in strict compliance with their respective AWWA Standard.

6. Roof vents shall be installed in strict accordance with current AWWA standards and shall be equipped with approved screens to prevent entry of animals, birds, insects and heavy air contaminants. Screens shall be fabricated of corrosion resistant material and shall be 16 mesh or finer. Screens shall be securely clamped in place with stainless or galvanized bands or wires and shall be designed to withstand winds of not less than tank design criteria (unless specified otherwise by the engineer).

7. All roof openings shall be designed in accordance with current AWWA standards. If an alternate 30 inch diameter access opening is not provided in a storage tank, the primary roof access opening shall not be less than 30 inches in diameter. Other roof openings required only for ventilating purposes during cleaning, repairing or painting operations shall be not less than 24 inches in diameter or as specified by the licensed professional engineer. An existing tank without a 30-inch in diameter access opening must be modified to meet this requirement when major repair or maintenance is performed on the tank. Each access opening shall have a raised curbing at least four inches in height with a lockable cover that overlaps the curbing at least two inches in a downward direction. Where necessary, a gasket shall be used to make a positive seal when the hatch is closed. All hatches shall remain locked except during inspections and maintenance.

8. Overflows shall be designed in strict accordance with current AWWA standards and shall terminate with a gravity-hinged and weighted cover, an elastomeric duckbill valve, or other approved device to prevent the entrance of insects and other nuisances. The cover shall fit tightly with no gap over 1/16 inches. If the overflow terminates at any point other than the ground level, it shall be located near enough and at a position accessible from a ladder or the balcony for inspection purposes. The overflow(s) shall be sized to handle the maximum possible fill rate without exceeding the capacity of the overflow(s). The discharge opening of the overflow(s) shall be above the surface of the ground and shall not be subject to submergence.

9. All clearwells and water storage tanks shall have a liquid level indicator located at the tank site. The indicator can be a float with a moving target, an ultrasonic level indicator, or a pressure gauge calibrated in feet of water. If an elevated tank or standpipe has a float with moving target indicator, it must also have a pressure indicator located at ground level. Pressure gauges must not be less than three inches in diameter and calibrated at not more than two-foot intervals. Remote reading gauges at the owner's treatment plant or pumping station will not eliminate the requirement for a gauge at the tank site unless the tank is located at the plant or station.

10. Inlet and outlet connections shall be located so as to prevent short circuiting or stagnation of water. Clearwells used for disinfectant contact time shall be appropriately baffled.

11. Clearwells and potable water storage tanks shall be thoroughly tight against leakage, shall be located above the ground water table and shall have no walls in common with any other plant units containing water in the process of treatment. All associated appurtenances including valves, pipes and fittings shall be tight against leakage.

12. Each clearwell or potable water storage tank shall be provided with a means of removing accumulated silt and deposits at all low points in the bottom of the tank. Drains shall not be connected to any waste or sewage disposal system and shall be constructed so that they are not a potential agent in the contamination of the stored water.

13. All clear wells, ground storage tanks, standpipes, and elevated tanks shall be painted, disinfected, and maintained in strict accordance with current AWWA standards. However, no temporary coatings, wax grease coatings, or coating materials containing lead will be allowed. No other coatings will be allowed which are not approved for use (as a contact surface with potable water) by the United States Environmental Protection Agency (EPA), NSF International, or the United States Food and Drug Administration (FDA). All newly installed coatings must conform to ANSI/NSF International Standard 61 and must be certified by an organization accredited by ANSI.

14. No tanks or containers shall be used to store potable water that has previously been used for any non-potable purpose. Where a used tank is proposed for use, a letter

AECOM
AECOM TECHNICAL SERVICES, INC.
19219 KATY FREEWAY, SUITE 100
HOUSTON, TEXAS 77094
WWW.AECOM.COM
TBPE REG. NO. F-3580

AECOM Project No.: 60592253

STATE OF TEXAS
MICHAEL J. ROLEN
55388
REGISTERED PROFESSIONAL ENGINEER
06/28/2019

SAN JACINTO RIVER AUTHORITY
THE WOODLANDS DIVISION

SAN JACINTO RIVER AUTHORITY
SJRA
www.SJRA.net

GROUND STORAGE TANK NO. 2 AT WATER PLANT NO. 4

ISSUE	DATE	DESCRIPTION
0	06/28/2019	ISSUED FOR CONSTRUCTION

SJRA PROJECT NO: WDPR 0098.1001.2G002
FILE NAME: 00G007.dwg
DRAWN BY: J GARNER
CHECKED BY: K ZHENG
SCALE: NONE

GENERAL

TEXAS COMMISSION ON ENVIRONMENTAL QUALITY GENERAL CONSTRUCTION NOTES

SHEET 00G007
SEQ. 7 OF 45

AGENCY REVIEW SUBMITTAL GST NO. 2 AT WP NO. 4

FILE: P:_PWD\SJRA\60592253 - Well Rehab GST No. 2, WP 4\900 CAD, GIS\910-CAD\20-SHEETS\GENERAL\00G007.dwg LAYOUT: 00G007 DATE: 6/27/2019 3:18:23 PM BY: GARNERJ

CIVIL MAPPING SYMBOLOGY

- EMBANKMENT SLOPE (CUT)
- EMBANKMENT SLOPE (FILL)
- H:V — EMBANKMENT SLOPE RIGHT ARROW RIGHT
- H:V — EMBANKMENT SLOPE LEFT ARROW LEFT
- 123 — SPOT ELEVATION/POINT #
- SURVEY BENCHMARK
- CP-X — SURVEY CONTROL POINT
- HORIZONTAL CONTROL POINT
- VERTICAL CONTROL POINT
- SECTION CORNER MONUMENT
- SECTION CORNER NO MONUMENT
- X — IDENTIFICATION AND APPROXIMATE LOCATION OF SOIL TEST HOLE
- X — TEST PIT
- X — SOIL BORING
- BUOY
- FLOW ARROW
- WATER LEVEL IN SECTION/PROFILE
- TIDE GAUGE
- EXISTING UTILITY POLE
- DOWNGUY
- J X — EXTERIOR UTILITY JUNCTION BOX
- XXX — INTERSTATE HIGHWAY SYMBOL
- XXX — US HIGHWAY SYMBOL
- XXX — STATE HIGHWAY SYMBOL
- HAY BALE SILT CHECK
- TEMPORARY SEDIMENT TRAP
- X — PIEZOMETER
- RX — RAIL SIGNAL
- RAIL SWITCH
- SIGN
- In — TIRE TREADLE
- TRAFFIC ARM WITH CARD READER
- TRAFFIC ARM MECHANICAL SWING
- REFLECTIVE STRIPING

- CO — CLEANOUT
- CULVERT END SYMBOL (WITH CULVERT SHOWN BETWEEN SYMBOLS)
- X — FIRE HYDRANT
- F — FUEL OIL METER
- F — FUEL OIL MANHOLE
- F — FUEL OIL VAULT
- GT — GREASE TRAP
- GC — GRIT CHAMBER
- HEADWALL
- I — INDUSTRIAL WASTE WATER METER
- I — INDUSTRIAL WASTE WATER MANHOLE
- G — NATURAL GAS METER
- G — NATURAL GAS RECEIVER
- G — NATURAL GAS TRAP
- G — NATURAL GAS LINE VAULT
- MW — MONITORING WELL
- X — POST INDICATOR VALVE
- PS X — PUMP STATION
- S — SANITARY MANHOLE
- ST — SEPTIC TANK
- X — TANK BELOW GROUND
- X — TANK HORIZONTAL ABOVE GROUND
- X — TANK VERTICAL ABOVE GROUND
- LIGHT POLE

- CB — STORM CATCH BASIN
- CB — STORM ROUND CATCH BASIN
- D — STORM DRAINAGE MANHOLE
- D — STORM DRAIN INLET
- WATER/AIR VENT
- W — WATER BACKFLOW PREVENTER
- WATER BLOWOFF
- W — WATER METER
- SO — WATER SHUTOFF
- WS — WATER SOFTENER
- W — WATER VALVE VAULT
- VALVE
- BLOW OFF VALVE
- AIR VALVE
- INJ — CHEMICAL INJECTION MANHOLE
- SM — SAMPLE MANHOLE
- MH — MANHOLE
- PINE TREE
- SWEETGUM TREE
- TREE UNKNOWN TYPE
- WALNUT TREE
- PECAN TREE
- ELM TREE
- YAUPON TREE
- TALLOW TREE
- CEDAR TREE
- OAK TREE
- CYPRESS TREE
- BOLLARD

UTILITY/CIVIL LINE SYMBOLOGY

- PIPELINE
- LARGE PIPELINE
- UTILITY BENEATH STRUCTURE
- RAILROAD
- CENTERLINE
- BOTTOM OF DITCH
- PROPERTY LINE
- EASEMENT
- LIMITS OF CONSTRUCTION
- ROW
- EXISTING CONTOUR (MINOR)
- 25 — EXISTING CONTOUR W/ELEVATION (MAJOR)
- EXISTING FENCE
- EXISTING VEGETATION/BRUSH LINE
- FENCE – BARB WIRE
- FENCE – CHAIN LINK
- FENCE – FIELD
- FENCE – OTHER
- FENCE – WOOD
- XX — FENCE – WOVEN WIRE
- FLOOD LIMIT (25 YEAR)
- FLOOD LIMIT (50 YEAR)
- FLOOD LIMIT (100 YEAR)
- FLOOD LIMIT (200 YEAR)
- FLOOD LIMIT (500 YEAR)
- HIGHWAY GUARDRAIL
- LEVEE TOP
- LEVEE TOE
- NEW CONTOUR (MINOR)
- 25 — NEW CONTOUR (MAJOR)
- ROCK BERM
- RFB — REINFORCED FILTER FABRIC BARRIER
- TOE OF SLOPE
- TOP OF SLOPE
- PIPE TRENCH
- IPB1 — INLET PROTECTION BARRIERS FOR STAGE 1 INLETS
- SC — STABILIZED CONSTRUCTION ACCESS
- FO — FIBER OPTIC
- AIR — COMPRESSED AIR
- E — ELECTRIC POWER
- FUTURE PIPELINE
- D — FUTURE STRUCTURE
- SWALE
- 22 — POINT MARKER (COORDINATED LOCATION) (WITH POINT NUMBER)

GENERAL NOTES:

1. THIS IS A STANDARD CIVIL SYMBOLOGY SHEET. ALL SYMBOLS ARE NOT NECESSARILY USED ON THIS PROJECT.
2. SCREENING OR SHADING OF WORK IS USED TO INDICATE EXISTING COMPONENTS OR TO DE-EMPHASIZE PROPOSED IMPROVEMENTS TO HIGHLIGHT SELECTED TRADE WORK. REFER TO CONTEXT OF EACH SHEET FOR USAGE.

AGENCY REVIEW SUBMITTAL GST NO. 2 AT WP NO. 4

AECOM
AECOM TECHNICAL SERVICES, INC.
19219 KATY FREEWAY, SUITE 100
HOUSTON, TEXAS 77094
WWW.AECOM.COM
TBPE REG. NO. F-3580

AECOM Project No.: 60592253

STATE OF TEXAS
MICHAEL J. ROLEN
55388
REGISTERED PROFESSIONAL ENGINEER
06/28/2019

SAN JACINTO RIVER AUTHORITY
THE WOODLANDS DIVISION

SAN JACINTO RIVER AUTHORITY SJRA www.SJRA.net

GROUND STORAGE TANK NO. 2 AT WATER PLANT NO. 4

ISSUE	DATE	DESCRIPTION
0	06/28/2019	ISSUED FOR CONSTRUCTION

SJRA PROJECT NO: WDPR 0098.1001.2G002
FILE NAME: 00C001.dwg
DRAWN BY: J GARNER
CHECKED BY: K ZHENG
SCALE: NONE

CIVIL

CIVIL LEGEND

SHEET 00C001
SEQ. 8 OF 45

FILE: P:_PWD\SJRA\60592253 – Well Rehab GST No. 2, WP 4\900 CAD, GIS\910-CAD\20-SHEETS\CIVIL\00C001.dwg LAYOUT: 00C001 DATE: 6/27/2019 3:18:36 PM BY: GARNERJ

NOTE:

1. FIELD COAT ALL BOLTS AFTER ASSEMBLY TO 35 MDFT WITH 2 COATS OF COAL TAR EPOXY.

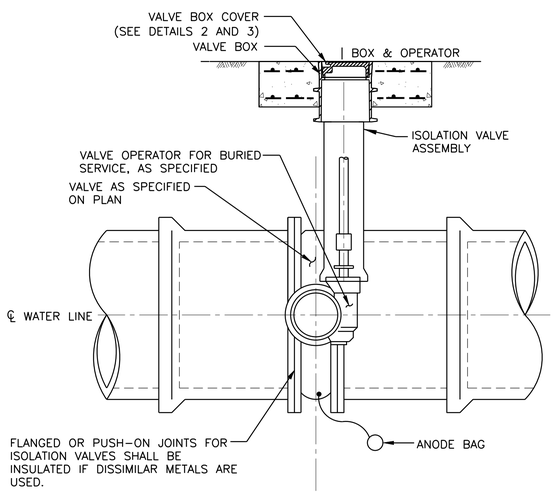

1 ISOLATION VALVE ASSEMBLY
(FOR WATER LINES 24-INCHES IN DIAMETER AND SMALLER)
NOT TO SCALE

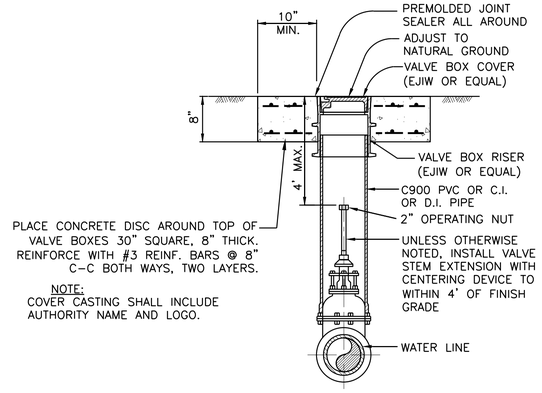

2 VALVE BOX
NOT TO SCALE

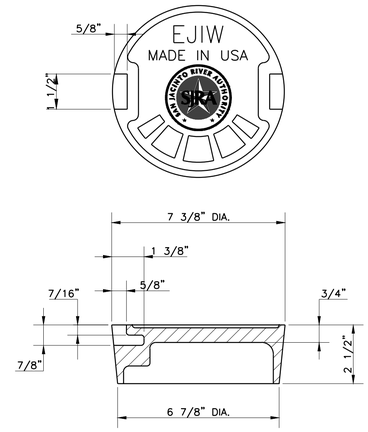

3 VALVE BOX COVER
(EAST JORDAN IRON WORKS (EJIW OR EQUAL))
NOT TO SCALE

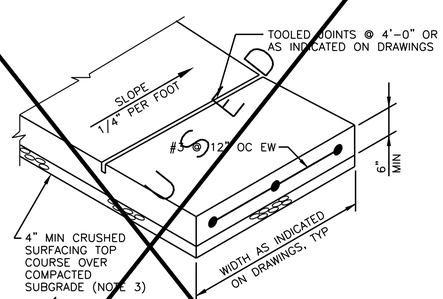

NOTES:

1. PROVIDE 1/2" PREMOLDED JOINT FILLER (FULL DEPTH) ALL AROUND ALL UTILITY POLES, METER BOXES, BUILDING FOUNDATIONS, ETC.
2. PROVIDE EXPANSION JOINTS AT 30' MAX SPACING, TYPICAL.
3. FOR SIDEWALK AROUND GROUND STORAGE TANKS, USE SUBGRADE AS SPECIFIED IN 33 16 14.

4 CONCRETE SIDEWALK
NOT TO SCALE

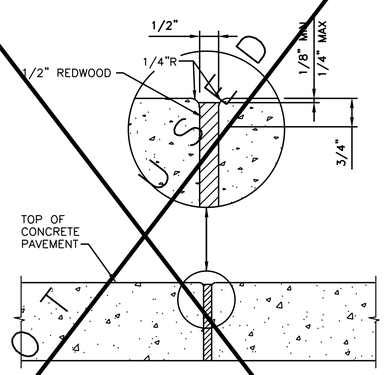

5 CONCRETE SIDEWALK EXPANSION JOINT
NOT TO SCALE

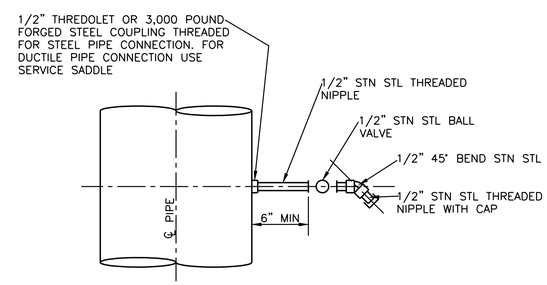

6 MANUAL SAMPLE TAP
NOT TO SCALE

AECOM
AECOM TECHNICAL SERVICES, INC.
19219 KATY FREEWAY, SUITE 100
HOUSTON, TEXAS 77094
WWW.AECOM.COM
TBPE REG. NO. F-3580

AECOM Project No.: 60592253

STATE OF TEXAS
MICHAEL J. ROLEN
55388
REGISTERED PROFESSIONAL ENGINEER
06/28/2019

SAN JACINTO RIVER AUTHORITY
THE WOODLANDS DIVISION

GROUND STORAGE TANK NO. 2 AT WATER PLANT NO. 4

ISSUE	DATE	DESCRIPTION
0	06/28/2019	ISSUED FOR CONSTRUCTION

SJRA PROJECT NO: WDPR 0098.1001.2G002
FILE NAME: 00C501.dwg
DRAWN BY: J GARNER
CHECKED BY: K ZHENG
SCALE: AS NOTED
CIVIL

CIVIL DETAILS 1

SHEET 00C501
SEQ. 9 OF 45

AGENCY REVIEW SUBMITTAL GST NO. 2 AT WP NO. 4

FILE: P:_PWD\SJRA\60592253 - Well Rehab GST No. 2, WP 4\900 CAD, GIS\910-CAD\20-SHEETS\CIVIL\00C501.dwg LAYOUT: 00C501 DATE: 6/27/2019 3:18:49 PM BY: GARNERJ

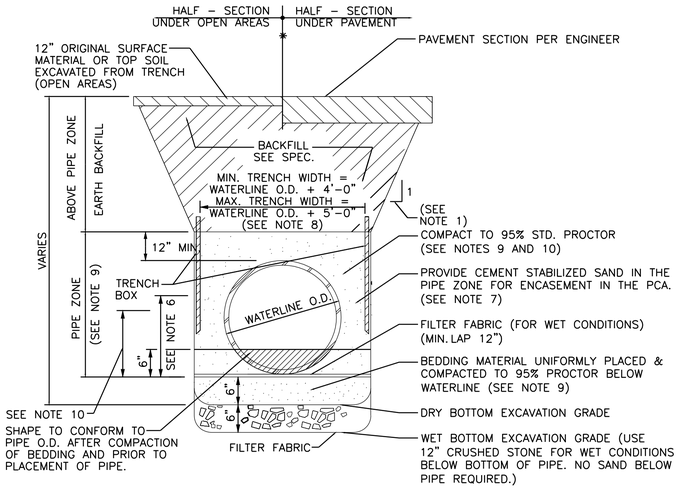

1 WATERLINE EXCAVATION & BACKFILL DETAIL
NOT TO SCALE

NOTES:
1. SEE TRENCH SAFETY SYSTEM SPECIFICATIONS FOR MAXIMUM ALLOWABLE SLOPES.
2. FOR WET BOTTOM EXCAVATION LIMITS OF CRUSHED STONE, EXTEND AS SHOWN.
3. KEY CONCRETE TRENCH DAM MINIMUM OF 6 INCHES INTO TRENCH BOTTOM AND WALLS.
4. TRENCH DAM MAY BE FORMED OR UNFORMED. ACTUAL SHAPE OF CONCRETE TRENCH DAM CROSS SECTION MAY BE DETERMINED BY CONTRACTOR IN FIELD, MEETING 6-INCH MINIMUM THICKNESS AND 6-INCH KEY DEPTH REQUIREMENTS.
5. TRENCH DAM SHALL BE PLACED AT LEAST 5 FT. AWAY FROM ANY PIPELINE STRUCTURE (EACH SIDE). SEE SPECIFICATIONS FOR OTHER REQUIREMENTS.
6. THIS PORTION OF PIPE EMBEDMENT ZONE MUST BE RECOMPACTED TO PROPER DENSITIES AFTER MOVING SUPPORT SYSTEM FORWARD.
7. USE POLYETHYLENE WRAP AS A BOND BREAKER BETWEEN CEMENT STABILIZED SAND AND PIPE.
8. FOR WATER LINE DIAMETER LESS THAN 24-INCH, MIN. TRENCH WIDTH = O.D. + 2'-0". MAX. TRENCH WIDTH = O.D. + 3'-0".
9. USE GRANULAR EMBEDMENT MATERIAL FOR DEPTH OF COVER 4 TO 16 FEET. USE FLOWABLE FILL FOR DEPTH OF COVER GREATER THAN 16 FEET. SEE SPECIFICATIONS FOR PLACEMENT.
10. USE CEMENT STABILIZED SAND TO SPRING LINE OF PIPE FOR DEPTH OF COVER GREATER THAN 16 FEET.

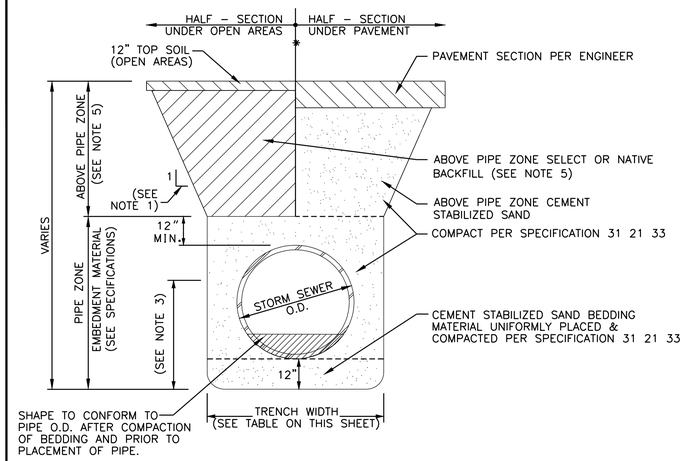

2 STORM SEWER EXCAVATION & BACKFILL DETAIL FOR DRY TRENCH
NOT TO SCALE

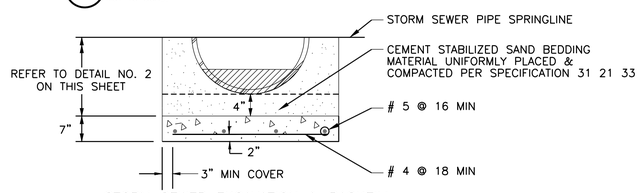

3 STORM SEWER EXCAVATION & BACKFILL DETAIL FOR WET TRENCH
NOT TO SCALE

STORM SEWER NOTES:
1. MAXIMUM ALLOWABLE SLOPE PER APPLICABLE SAFETY STANDARDS.
2. REINFORCED CONCRETE SLAB, PIPE AND BEDDING TO BE PLACED IN DRY TRENCH ONLY. CONCRETE IN SLAB TO REACH MIN COMPRESSIVE STRENGTH OF 1000 PSI BEFORE PIPE IS LAID.
3. THIS PORTION OF PIPE EMBEDMENT ZONE MUST BE RECOMPACTED TO PROPER DENSITIES AFTER MOVING TRENCH SAFETY SUPPORT SYSTEM FORWARD.
4. FOR PIPE MATERIAL OTHER THAN PVC, USE POLYETHYLENE WRAP AS A BOND BREAKER BETWEEN CEMENT STABILIZED SAND AND PIPE.
5. PLACED IN 6 TO 8 INCH LIFTS COMPACTED PER SPECIFICATION 31 21 33.

TRENCH WIDTH TABLE

NOMINAL PIPE SIZE, INCHES	MINIMUM TRENCH WIDTH, INCHES
LESS THAN 6	O.D. + 12
6 TO 30	O.D. + 24
36 TO 42	O.D. + 36
GREATER THAN 42	O.D. + 48

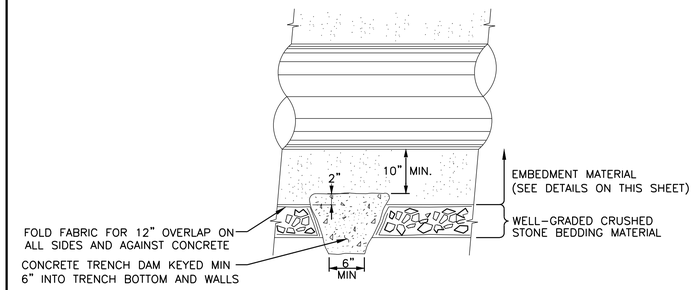

4 LONGITUDINAL SECTION ALONG WATERLINE/SANITARY SEWER PIPE ℄ AT FOUNDATION TRENCH DAM FOR WET TRENCH
NOT TO SCALE

NOTES:
1. WHEN AUTHORIZED BY OWNER'S REPRESENTATIVE, CONTRACTOR SHALL INSTALL KEYS AS TO NOT CREATE POINT LOADING IN PIPE. KEY CONCRETE TRENCH DAM MINIMUM OF 6 INCHES INTO TRENCH BOTTOM AND WALLS. TRENCH DAM MAY BE FORMED OR UNFORMED. ACTUAL SHAPE OF CONCRETE TRENCH DAM CROSS SECTION MAY BE DETERMINED BY CONTRACTOR IN FIELD, MEETING 6-INCH MINIMUM THICKNESS AND 6-INCH KEY DEPTH REQUIREMENTS. TRENCH DAM SHALL BE PLACED AT LEAST 5 FT. AWAY FROM ANY PIPELINE STRUCTURE (EACH SIDE). SEE SPECIFICATIONS FOR OTHER REQUIREMENTS.
2. PLACE TRENCH DAMS NO FURTHER APART THAN 100 LF.

AECOM
AECOM TECHNICAL SERVICES, INC.
19219 KATY FREEWAY, SUITE 100
HOUSTON, TEXAS 77094
WWW.AECOM.COM
TBPE REG. NO. F-3580

AECOM Project No.: 60592253

STATE OF TEXAS
MICHAEL J. ROLEN
55388
REGISTERED PROFESSIONAL ENGINEER
06/28/2019

SAN JACINTO RIVER AUTHORITY
THE WOODLANDS DIVISION

SAN JACINTO RIVER AUTHORITY
SJRA
www.SJRA.net

GROUND STORAGE TANK NO. 2 AT WATER PLANT NO. 4

ISSUE	DATE	DESCRIPTION
0	06/28/2019	ISSUED FOR CONSTRUCTION

SJRA PROJECT NO: WDPR 0098.1001.2G002
FILE NAME: 00C502.dwg
DRAWN BY: J GARNER
CHECKED BY: K ZHENG
SCALE: AS NOTED
CIVIL

CIVIL DETAILS 2

SHEET 00C502
SEQ. 10 OF 45

AGENCY REVIEW SUBMITTAL GST NO. 2 AT WP NO. 4

FILE: P:_PWD\SJRA\60592253 – Well Rehab GST No. 2, WP 4\900 CAD, GIS\910-CAD\20-SHEETS\CIVIL\00C502.dwg LAYOUT: 00C502 DATE: 6/27/2019 3:19:02 PM BY: GARNERJ

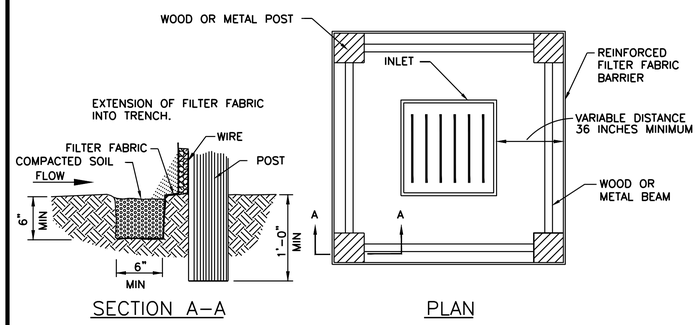

SECTION A–A

PLAN

SEE REINFORCED FILTER FABRIC BARRIER DETAIL FOR REINFORCED FILTER FABRIC BARRIER REQUIREMENTS

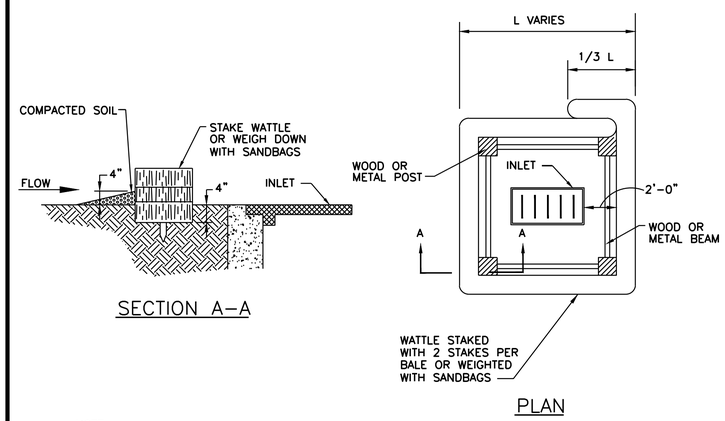

SECTION A–A

PLAN

NOTE:
TYPICALLY STRAW BALES ARE NOT RECOMMENDED FOR INLET PROTECTION BARRIERS.

IPB1
SYMBOL

1 – INLET PROTECTION BARRIERS FOR STAGE I INLETS
NOT TO SCALE

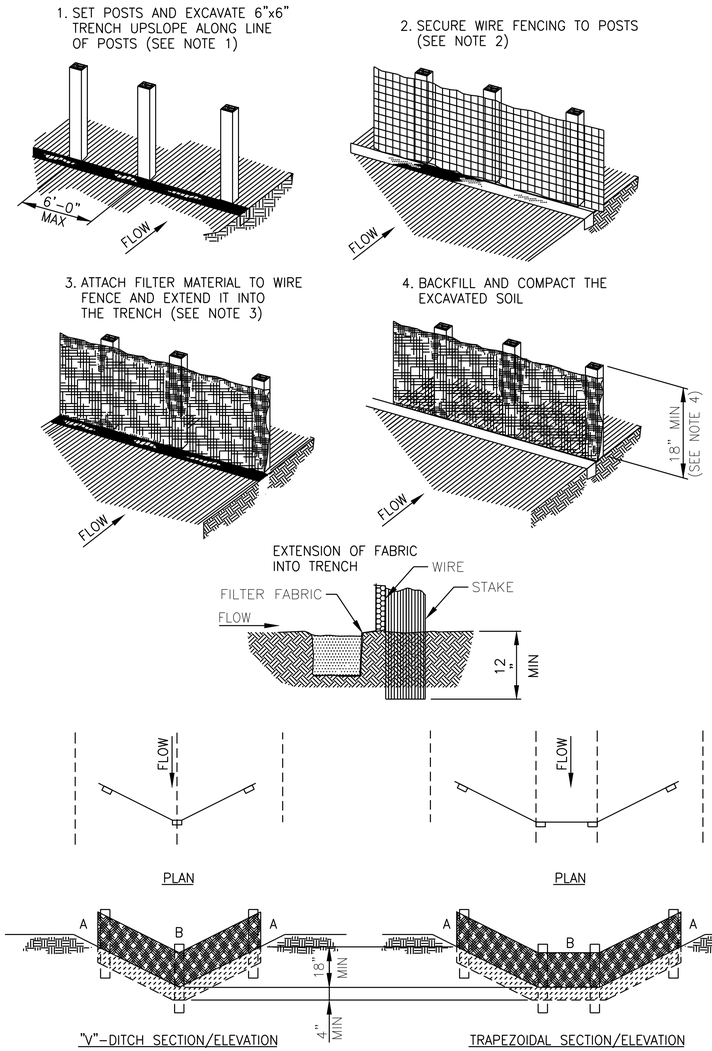

"V"–DITCH SECTION/ELEVATION

TRAPEZOIDAL SECTION/ELEVATION

CONSTRUCTION NOTES

1. SET 2 INCH BY 2 INCH WOODEN STAKES SPACED A MAXIMUM OF 6 FEET APART AND EMBEDDED A MINIMUM OF 12 INCHES
2. WOVEN WIRE FENCE TO BE FASTENED SECURELY TO FENCE POSTS WITH STAPLES OR WIRE TIES.
3. FILTER CLOTH TO BE FASTENED SECURELY TO WOVEN WIRE FENCE, WITH TIES SPACED EVERY 24 INCHES AT TOP AND MIDSECTION.
4. MINIMUM HEIGHT OF FILTER SHOULD BE 18 INCHES AND A MAXIMUM OF 36 INCHES ABOVE NATURAL GROUND.
5. WHEN TWO SECTIONS OF FILTER CLOTH ADJOIN EACH OTHER THEY SHALL BE OVERLAPPED 6 INCHES AT THE POSTS, AND FOLDED AND SEALED SECURELY.

RFB

2 – REINFORCED FILTER FABRIC BARRIER
NOT TO SCALE

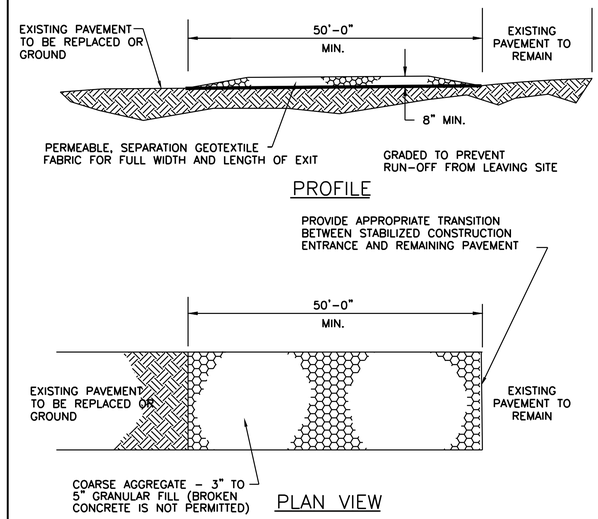

GENERAL NOTES:

1. MINIMUM LENGTH IS AS SHOWN ON CONSTRUCTION DRAWINGS OR 50 FEET, WHICHEVER IS MORE.
2. CONSTRUCT AND MAINTAIN CONSTRUCTION EXIT WITH CONSTANT WIDTH ACROSS ITS LENGTH, INCLUDING ALL POINTS OF INGRESS OR EGRESS.
3. UNLESS SHOWN ON THE CONSTRUCTION DRAWINGS, STABILIZATION FOR OTHER AREAS WILL HAVE THE SAME AGGREGATE THICKNESS AND WIDTH REQUIREMENTS AS THE STABILIZED CONSTRUCTION EXIT.
4. WHEN SHOWN ON THE CONSTRUCTION DRAWINGS, WIDEN OR LENGTHEN STABILIZED AREA TO ACCOMMODATE A TRUCK WASHING AREA. PROVIDE OUTLET SEDIMENT TRAP FOR THE TRUCK WASHING AREA.
5. PROVIDE PERIODIC TOP DRESSING WITH ADDITIONAL COARSE AGGREGATE TO MAINTAIN THE REQUIRED DEPTH OR WHEN SURFACE BECOMES PACKED WITH MUD.
6. PERIODICALLY TURN AGGREGATE TO EXPOSE A CLEAN DRIVING SURFACE.
7. ALTERNATIVE METHODS OF CONSTRUCTION INCLUDE
   –CEMENT STABILIZED SOIL: COMPACTED CEMENT STABILIZED SOIL, LIMESTONE AGGREGATE, OR OTHER FILL MATERIAL IN AN APPLICATION OF THICKNESS OF 8 INCHES.
   –WOOD MATS: OAK OR OTHER HARDWOOD TIMBERS PLACED EDGE TO EDGE AND ACROSS SUPPORT WOODEN BEAMS WHICH ARE PLACED ON TOP OF EXISTING SOIL IN AN APPLICATION THICKNESS OF 6 INCHES.
   –STEEL MATS: PERFORATED MATS PLACED ACROSS PERPENDICULAR SUPPORT MEMBERS.

STABILIZED CONSTRUCTION ACCESS

SC
SYMBOL

3 – STABILIZED CONSTRUCTION ACCESS
NOT TO SCALE

AECOM
AECOM TECHNICAL SERVICES, INC.
19219 KATY FREEWAY, SUITE 100
HOUSTON, TEXAS 77094
WWW.AECOM.COM
TBPE REG. NO. F-3580

AECOM Project No.: 60592253

STATE OF TEXAS
MICHAEL J. ROLEN
55388
REGISTERED PROFESSIONAL ENGINEER
06/28/2019

SAN JACINTO RIVER AUTHORITY
THE WOODLANDS DIVISION

GROUND STORAGE TANK NO. 2 AT WATER PLANT NO. 4

ISSUE	DATE	DESCRIPTION
0	06/28/2019	ISSUED FOR CONSTRUCTION

SJRA PROJECT NO: WDPR 0098.1001.2G002
FILE NAME: 00C503.dwg
DRAWN BY: J GARNER
CHECKED BY: K ZHENG
SCALE: AS NOTED
CIVIL

CIVIL DETAILS 3

SHEET 00C503
SEQ. 11 OF 45

AGENCY REVIEW SUBMITTAL GST NO. 2 AT WP NO. 4

FILE: P:_PWD\SJRA\60592253 – Well Rehab GST No. 2, WP 4\900 CAD, GIS\910-CAD\20-SHEETS\CIVIL\00C503.dwg LAYOUT: 00C503 DATE: 6/27/2019 3:19:16 PM BY: GARNERJ

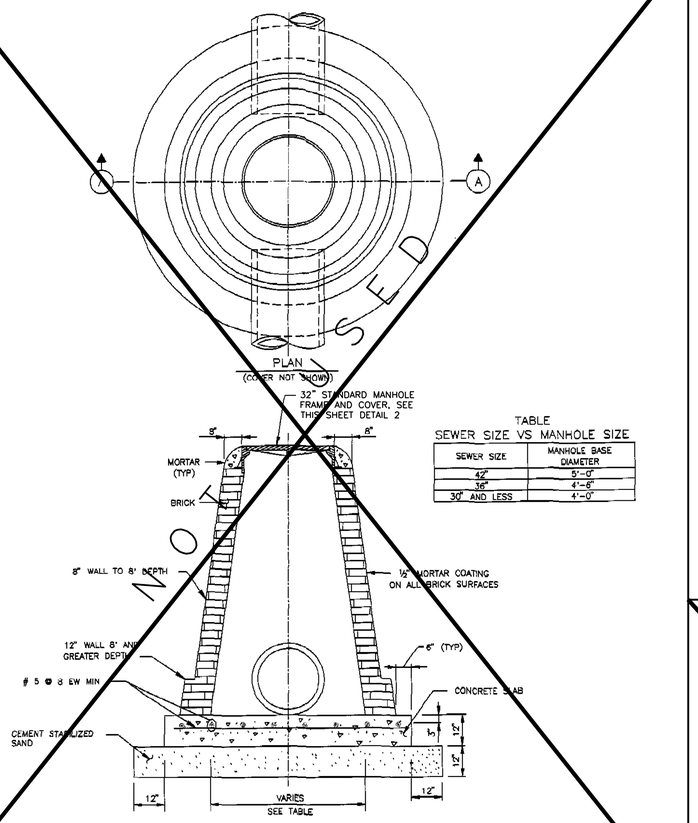

TABLE
SEWER SIZE VS MANHOLE SIZE

SEWER SIZE	MANHOLE BASE DIAMETER
42"	5'-0"
36"	4'-6"
30" AND LESS	4'-0"

1 STORM SEWER TYPE "C" MANHOLE
NOT TO SCALE

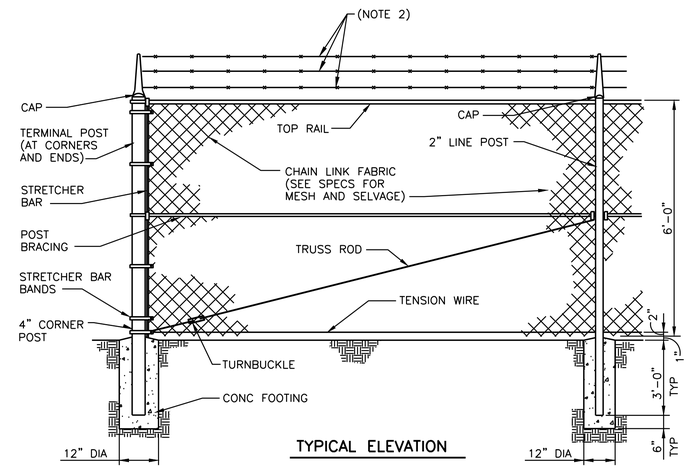

TYPICAL ELEVATION

3 CHAIN LINK FENCE
NOT TO SCALE

NOTES:

1. CONTRACTOR SHALL DESIGN, FURNISH, AND INSTALL THE FENCE ACCORDING TO THE LATEST TCEQ REQUIREMENTS IN TITLE 30, SUBCHAPTER D, SECTION 290.38
2. 3-STRANDS OF BARBED WIRE EXTEND OUTWARD FROM THE TOP OF THE FENCE AT A 45 DEGREE ANGLE WITH THE SMOOTH SIDE OF THE FENCE.
3. MEASUREMENT OF 6 FOOT IS BASED ON TOP OF CONCRETE FOOTING MATCHING GROUND ELEVATION.
4. FENCE WORK SHALL INCLUDE NEW CORNER AND LINE POSTS, FABRIC, BARBED WIRE STRANDS, SUPPORTS AND OTHER APPURTENANCES AS REQUIRED TO COMPLETE FENCE.
5. MATCH EXISTING FENCE COLOR, DIMENSIONS, AND MATERIALS.

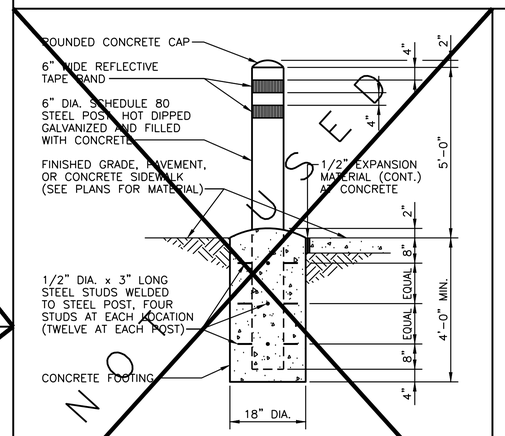

4 BOLLARD
NOT TO SCALE

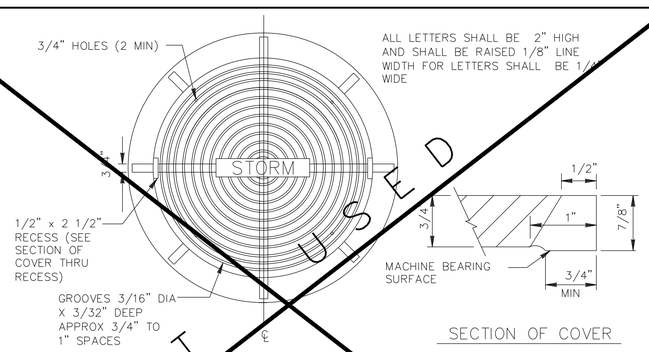

2 MANHOLE FRAME AND COVER
NOT TO SCALE

AECOM
AECOM TECHNICAL SERVICES, INC.
19219 KATY FREEWAY, SUITE 100
HOUSTON, TEXAS 77094
WWW.AECOM.COM
TBPE REG. NO. F-3580

AECOM Project No.: 60592253

STATE OF TEXAS
MICHAEL J. ROLEN
55388
REGISTERED PROFESSIONAL ENGINEER
06/28/2019

SAN JACINTO RIVER AUTHORITY
THE WOODLANDS DIVISION

SAN JACINTO RIVER AUTHORITY
SJRA
www.SJRA.net

GROUND STORAGE TANK NO. 2 AT WATER PLANT NO. 4

ISSUE	DATE	DESCRIPTION
0	06/28/2019	ISSUED FOR CONSTRUCTION

SJRA PROJECT NO: WDPR 0098.1001.2G002
FILE NAME: 00C504.dwg
DRAWN BY: J GARNER
CHECKED BY: K ZHENG
SCALE: AS NOTED
CIVIL

CIVIL DETAILS 4

SHEET 00C504
SEQ. 12 OF 45

AGENCY REVIEW SUBMITTAL GST NO. 2 AT WP NO. 4

FILE: P:_PWD\SJRA\60592253 - Well Rehab GST No. 2, WP 4\900 CAD, GIS\910-CAD\20-SHEETS\CIVIL\00C504.dwg LAYOUT: 00C504 DATE: 6/27/2019 3:19:30 PM BY: GARNERJ

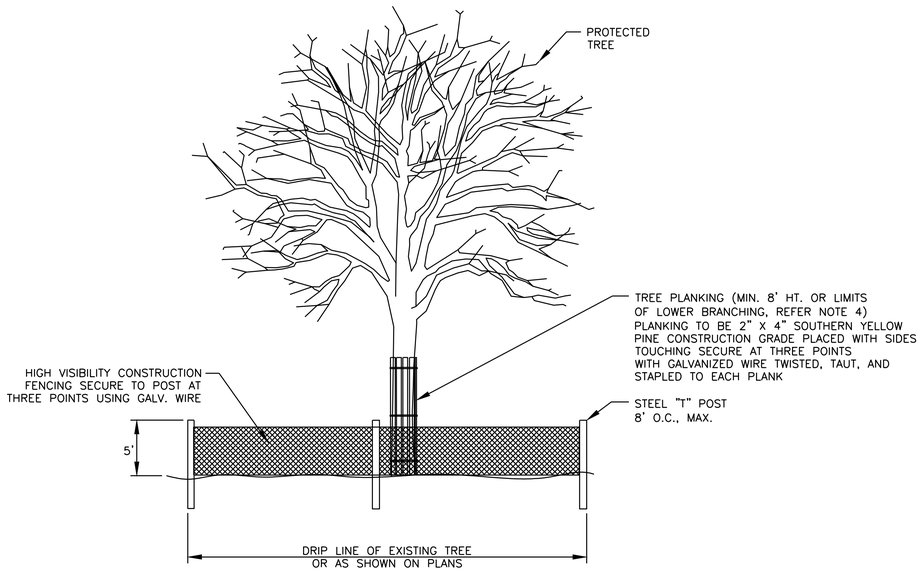

1 - TREE PROTECTION
NOT TO SCALE

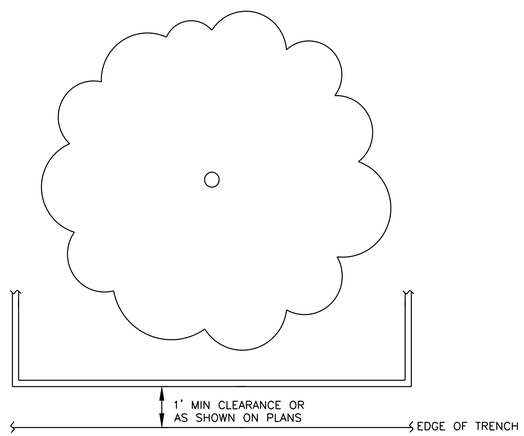

2 - TREE PROTECTION
NOT TO SCALE

NOTES:

1. ALL TREES LOCATED NEAR AREAS UNDER CONSTRUCTION, INCLUDING THE CASTING BED AREA, SHALL BE PROTECTED PER TECHNICAL SPECIFICATION SECTION 01 56 39 – "TEMPORARY TREE AND PLANT PROTECTION." IF THE ALTERNATE BID ITEM FOR CREATION OF A SITE RESTORATION PLAN IS APPROVED BY THE OWNER, CONTRACTOR WILL FOLLOW THE GUIDELINES LISTED IN THE SITE RESTORATION PLAN COVERED UNDER SPECIFICATION SECTION 01 74 23 – RESTORATION OF SITE.
2. TREE PROTECTION FENCING SHALL BE INSTALLED PRIOR TO MOBILIZATION.
3. FENCING SHALL BE LOCATED AS SHOWN ON DRAWINGS, OR COMPLETELY SURROUND THE TREE OR CLUSTERS OF TREES AND WILL BE LOCATED AT THE OUTERMOST LIMITS OF THE TREE BRANCHES (DRIPLINE). THE DRIPLINE DEFINES THE 'ROOT ZONE'. WITHIN THE LIMITS OF FENCING, THE CONTRACTOR SHALL PREVENT THE FOLLOWING FROM OCCURRING WITHOUT PRIOR WRITTEN AUTHORIZATION FROM THE OWNER'S REPRESENTATIVE:
   A. SOIL COMPACTION IN THE ROOT ZONE AREA RESULTING FROM VEHICULAR TRAFFIC OR STORAGE OF EQUIPMENT OR MATERIALS.
   B. ROOT ZONE DISTURBANCES DUE TO GRADE CHANGES (GREATER THAN 3" CUT OR FILL) OR TRENCHING NOT REVIEWED OR AUTHORIZED.
   C. WOUNDS TO EXPOSED ROOTS, TRUNK, OR LIMBS BY MECHANICAL EQUIPMENT.
   D. OTHER ACTIVITIES DETRIMENTAL TO TREES SUCH AS CHEMICAL STORAGE, CONCRETE TRUCK CLEANING, AND FIRES.
4. WHERE EXCEPTIONS RESULT IN A FENCE BEING CLOSER THAN 4 FEET TO A TRUNK, PROTECT THE TRUNK WITH STRAPPED-ON PLANKING TO A HEIGHT OF 8' (OR TO THE LIMITS OF THE LOWER BRANCHING) AS INDICATED ON TREE PROTECTION PLANS.
5. ALL GRADING WITHIN PROTECTED ROOT ZONE AREAS SHALL BE DONE BY HAND TO MINIMIZE ROOT DAMAGE AND SOIL COMPACTION. PRIOR TO GRADING, RELOCATE PROTECTIVE FENCING TO 2 FEET BEHIND THE GRADE CHANGE AREA. GRADE SHALL REMAIN UNCHANGED WHERE POSSIBLE.
6. ANY ROOT SEVERED BY CONSTRUCTION ACTIVITY SHALL BE PRUNED FLUSH WITH THE SOIL. BACKFILL ROOT AREAS WITH GOOD QUALITY TOP SOIL AS SOON AS POSSIBLE. IF EXPOSED ROOT AREAS ARE NOT BACKFILLED WITHIN 2 DAYS, COVER THEM WITH ORGANIC MATERIAL IN A MANNER WHICH REDUCES SOIL TEMPERATURE AND MINIMIZES DRYING OF THE ROOT DUE TO EVAPORATION.
7. TREES IMPACTED BY CONSTRUCTION ACTIVITIES SHALL BE WATERED THOROUGHLY ONCE A WEEK DURING PERIODS OF HOT AND/OR DRY WEATHER. TREE CROWNS SHALL BE SPRAYED WITH WATER PERIODICALLY TO REDUCE DUST ACCUMULATION ON THE LEAVES.
8. NO LANDSCAPE TOPSOIL DRESSING GREATER THAN 3" MAXIMUM SHALL BE PERMITTED WITHIN THE DRIPLINE OF TREES. NO PERMANENT SOIL OR MULCH IS PERMITTED ON THE ROOT FLARE OF ANY TREE.
9. PRUNING SHALL BE PERFORMED BY THE CONTRACTOR TO PROVIDE CLEARANCE FOR STRUCTURES OR CONSTRUCTION ACTIVITIES. PRUNING SHALL TAKE PLACE BEFORE CONSTRUCTION BEGINS, ONLY WITH PRIOR APPROVAL FROM AUTHORITY'S ENGINEER. ALL PRUNING MUST BE ACCORDING TO RECOGNIZED, APPROVED STANDARDS OF THE INDUSTRY (REFERENCE THE NAA PRUNING STANDARDS), AND BY AN EXPERIENCED AND QUALIFIED ARBORIST WHOSE PRIMARY BUSINESS IS TREE CARE.
10. PROVIDE CORRECTIVE PRUNING AT THE COMPLETION OF CONSTRUCTION TO REMOVE ANY BROKEN OR DAMAGED LIMBS, UNDER THE DIRECTION OF THE AUTHORITY'S ENGINEER.
11. IF REQUIRED, ROOT PRUNE BY TRENCHING A CLEAN 4" WIDE X 24" DEEP CUT BETWEEN THE DISTURBED AND UNDISTURBED ROOT ZONES WITH IRRIGATION TRENCHER TO MINIMIZE DAMAGE TO REMAINING ROOTS. MARK AND REVIEW TRENCH LINE WITH AUTHORITY'S ENGINEER PRIOR TO TRENCHING.
12. AS SOON AS 4" WIDE X 24" DEEP TRENCH IS CUT, EXPOSED ROOTS SHALL BE HAND CUT TO CREATE CLEAN ROOT CUTS. AS SOON AS HAND CUTS ARE COMPLETE, BACKFILL TRENCH WITH A SANDY LOAM TOPSOIL PLACED IN 6" LIFTS, AND COMPACTED AS REQUIRED BY SPECIFICATIONS.
13. IN AREAS WHERE LIME STABILIZATION ABUTS OR ENCROACHES UPON ROOT ZONES, AND WHERE ROOT PRUNING IS CALLED FOR, INSTALL 10-MIL. PLASTIC SHEETING TO FULL DEPTH OF ROOT PRUNING TRENCH AND 6" OVER TOP. CUT AND REMOVE EXPOSED PLASTIC AT COMPLETION OF WORK.

AECOM
AECOM TECHNICAL SERVICES, INC.
19219 KATY FREEWAY, SUITE 100
HOUSTON, TEXAS 77094
WWW.AECOM.COM
TBPE REG. NO. F-3580

AECOM Project No.: 60592253

STATE OF TEXAS
MICHAEL J. ROLEN
55388
REGISTERED PROFESSIONAL ENGINEER
06/28/2019

SAN JACINTO RIVER AUTHORITY
THE WOODLANDS DIVISION

GROUND STORAGE TANK NO. 2 AT WATER PLANT NO. 4

ISSUE	DATE	DESCRIPTION
0	06/28/2019	ISSUED FOR CONSTRUCTION

SJRA PROJECT NO: WDPR 0098.1001.2G002
FILE NAME: 00C505.dwg
DRAWN BY: J GARNER
CHECKED BY: K ZHENG
SCALE: AS NOTED
CIVIL

CIVIL DETAILS 5

SHEET 00C505
SEQ. 13 OF 45

AGENCY REVIEW SUBMITTAL GST NO. 2 AT WP NO. 4

FILE: P:_PWD\SJRA\60592253 – Well Rehab GST No. 2, WP 4\900 CAD, GIS\910-CAD\20-SHEETS\CIVIL\00C505.dwg LAYOUT: 00C505 DATE: 6/27/2019 3:19:43 PM BY: GARNERJ

SEQUENCE OF CONSTRUCTION:

CONTRACTOR WILL SUBMIT A SCHEDULE FOR WORK TO BE COMPLETED TO THE OWNER/ENGINEER. THE ORDER OF ITEMS LISTED BELOW CAN BE REARRANGED TO ALLOW CONTRACTOR TO PERFORM WORK EFFICIENTLY AND IN A TIMELY MANNER UPON APPROVAL OF THE OWNER/ENGINEER.

1. DEMOLITION OF THE EXISTING CHAIN LINK FENCE ALONG THE NORTH SIDE OF THE SITE, PER THE PLANS.
2. INSTALL TEMPORARY FENCING IN THE LOCATION AS SHOWN ON THE SITE PLAN.
3. CONSTRUCTION OF GROUND STORAGE TANK NO. 2 (GST #2).
4. SHUT DOWN THE FLOW CONTROL VALVE AT THE SURFACE WATER METER STATION.
5. ADD POSITION SWITCH TO THE EXISTING GATE VALVE FOR THE FLUSHING LINE.
6. ADD THE 16" BFV AT THE 16" Y TO ISOLATE GROUND STORAGE TANK NO. 1 (GST #1) FROM THE PROPOSED PIPING.
7. CONSTRUCTION OF ASSOCIATED PIPING (SEQUENCE PER CONTRACTOR):
   a. 24"– STORMWATER (STM) PIPING
   b. 24" – DRAIN (DR) PIPING
   c. 24" – OVERFLOW (OF) PIPING
   d. 24" – WELL COLLECTION LINE – BURIED (WCLB)
   e. 30" – WELL COLLECTION LINE – BURIED (WCLB)
   f. 24" – TANK TO TANK (TT) PIPING
   g. 16" – SURFACE WATER (SW) PIPING
   h. 24" – SUCTION HEADER – BURIED (SHB) PIPING
8. CONSTRUCTION OF ELECTRICAL AND INSTRUMENTATION CONNECTIONS FOR GST NO. 2.
9. DISINFECTON OF GST NO. 2 AND ASSOCIATED PIPING.
10. REPLACE THE PRESSURE INDICATOR TRANSMITTERS (PIT) AT GST NO. 1 WITH RADAR DETECTORS.
11. CLEAN AND PAINT GST NO.1.
12. INSTALL THE NEW CHAIN LINK FENCE ALONG THE NORTH SIDE OF THE SITE, PER THE PLANS.
13. CLEAN UP SITE

LINE TABLE		
LINE	BEARING	DISTANCE
L1	N 01°–37'–28" W	92.79'
L2	S 02°–58–13" E	40.03'
L3	S 18°–25'–45" E	60.00'

NOTES:

1. CONTRACTOR SHALL UPHOLD A WORKMAN LIKE CONDUCT AND AVOID CONFLICTS WITH OTHER ON–SITE CONTRACTORS.
2. CONTRACTOR IS RESPONSIBLE FOR ALL DAMAGES TO EXISTING FACILITIES, RESULTING FROM CONTRACTOR ACTIVITY, INCLUDING STABILIZED CONSTRUCTION EXIT, ACCESS ROAD AND STORM WATER POLLUTION PREVENTION CONTROLS. REPAIRS WILL BE PERFORMED IN A TIMELY MANNER, AS DETERMINED BY THE OWNER.
3. CONTRACTOR TO CONFINE WORK AND MATERIALS TO THE SITE AND ACCESS STRIP. SITE AND ACCESS STRIP ARE TO BE MAINTAINED IN AN ORDERLY MANNER TO THE MAXIMUM EXTENT PRACTICAL. CONTRACTOR IS NOT TO BLOCK ACCESS ROAD OR INTERFERE WITH THE PROGRESS OF OTHER CONTRACTORS.
4. CHLORINE INJECTION CAGE LOCATED NEAR WATER WELL NO. 30 CANNOT BE DAMAGED OR REMOVED SINCE IT IS THE ONLY DISINFECTION INJECTION FOR ALL RAW GROUND WATER ENTERING THE PLANT.

FLOOD PLAIN INFORMATION:

100 YEAR FLOOD PLAIN WATER SURFACE ELEVATION IS 160.00 AS PER FEDERAL EMERGENCY MANAGEMENT AGENCY FLOOD INSURANCE RATE MAP FOR MONTGOMERY COUNTY, TEXAS MAP NO. 48339C0515G (PANEL NO. 515 OF 750) REVISED AUGUST 18, 2014.

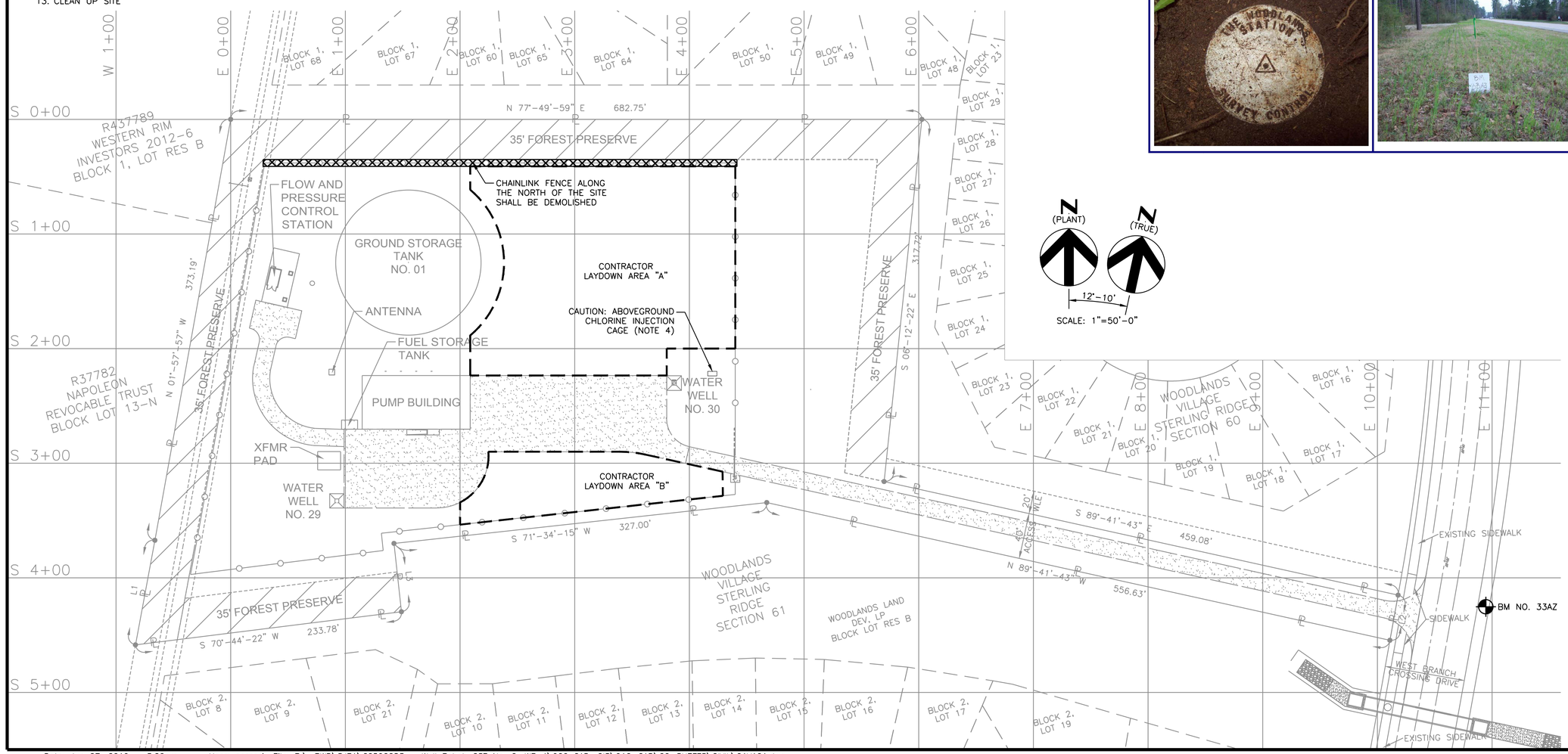

Benchmark No. 33 Azimuth

General Location: ±900 feet south of Burberry Park Circle on the east side of West Branch Crossing Drive across from the entrance to water plant

Latitude:	30° 11' 05.60452"
Longitude:	95° 35' 02.94528"
Grid Northing:	10,063,007.54
Grid Easting:	3,796,685.80
Surface Northing:	10,063,382.51
Surface Easting:	3,796,827.27

Texas Coordinate System of 1983 (NAD83, CORS)
Central Zone (4203)

Elevation: 175.40 Project Datum

Mark Logo: The Woodlands Survey Control
Designation: SR54
Fnd 3" Aluminum Disk in Conc. Not Stamped

Project Datum is based on a call elevation of 212.00 at S.J.R.A. G.R.P. BM#5 being a 3" brass disk in conc. with a mark logo "City of Houston SJRA 1972" stamped "D-1 D-3" located at the Lake Conroe gauging station pier on the dam structure.

Combined Factor: 0.9999627395
Surface = Grid / Combined Factor
Units of Measure: U.S. Survey Foot

Detail Sketch:

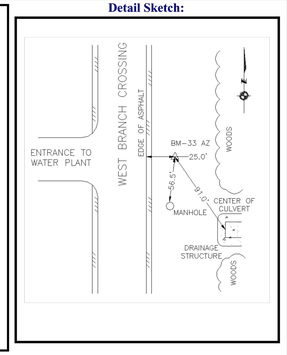

Photo 1-Station Detail:

Photo 2-Station Area Picture:

LEGEND:
- EXISTING (LIGHT LINE WORK)
- PROPOSED (DARK LINE WORK)

AECOM
AECOM TECHNICAL SERVICES, INC.
19219 KATY FREEWAY, SUITE 100
HOUSTON, TEXAS 77094
WWW.AECOM.COM
TBPE REG. NO. F–3580

AECOM Project No.: 60592253

STATE OF TEXAS
MICHAEL J. ROLEN
55388
REGISTERED PROFESSIONAL ENGINEER
06/28/2019

SAN JACINTO RIVER AUTHORITY
THE WOODLANDS DIVISION

GROUND STORAGE TANK NO. 2 AT WATER PLANT NO. 4

ISSUE	DATE	DESCRIPTION
0	06/28/2019	ISSUED FOR CONSTRUCTION

SJRA PROJECT NO: WDPR 0098.1001.2G002
FILE NAME: 01V101.dwg
DRAWN BY: J GARNER
CHECKED BY: K ZHENG
SCALE: AS NOTED
SURVEY/MAPPING

EXISTING SITE PLAN

SHEET 01V101
SEQ. 14 OF 45

AGENCY REVIEW SUBMITTAL GST NO. 2 AT WP NO. 4

FILE: P:_PWD\SJRA\60592253 – Well Rehab GST No. 2, WP 4\900 CAD, GIS\910–CAD\20–SHEETS\CIVIL\01V101.dwg LAYOUT: 01V101 DATE: 6/27/2019 3:20:10 PM BY: GARNERJ

Date: Jun 27, 2019 – 3:20pm User: garnerj File: P:_PWD\SJRA\60592253 – Well Rehab GST No. 2, WP 4\900 CAD, GIS\910–CAD\20–SHEETS\CIVIL\01V101.dwg

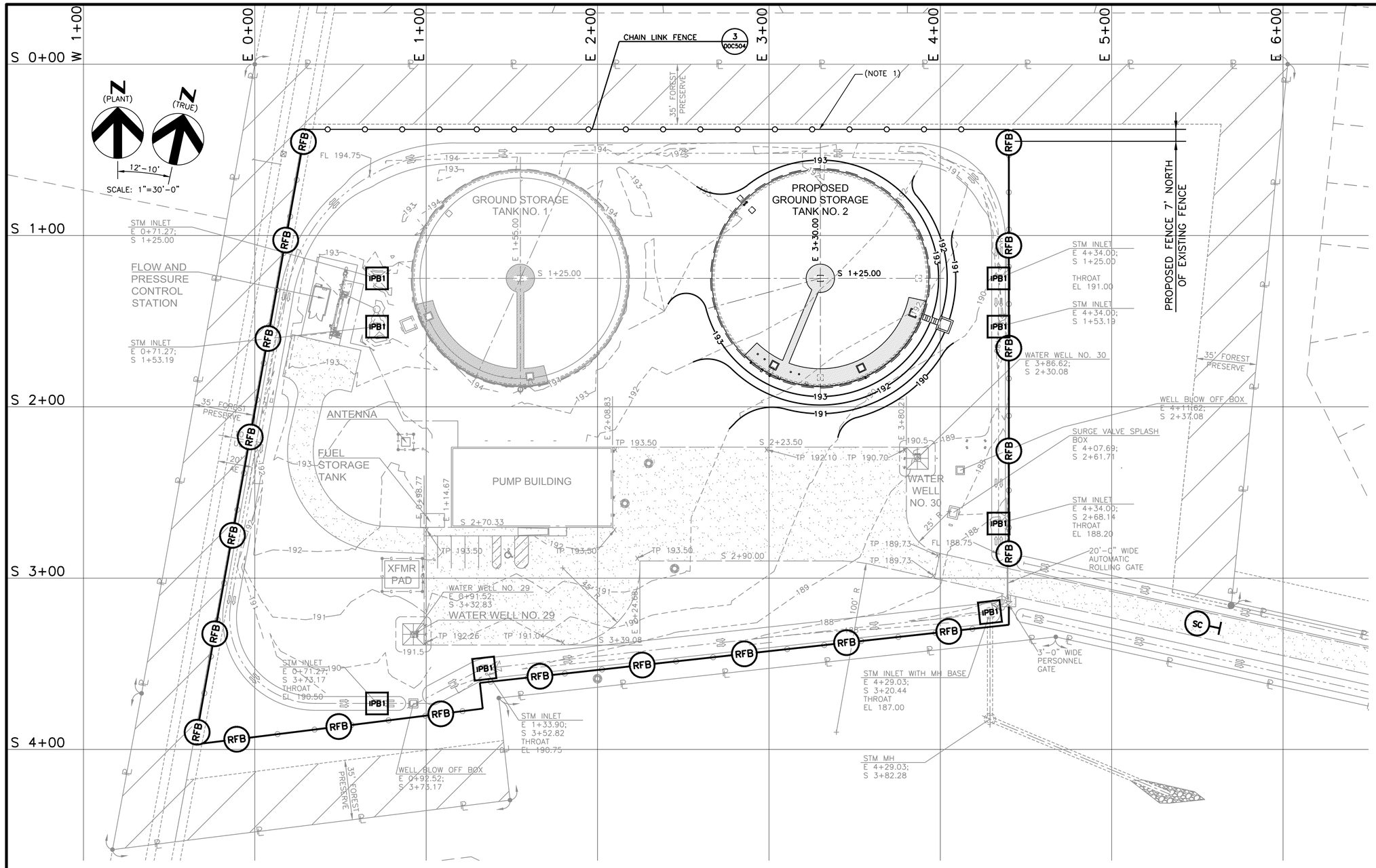

NOTES:

1. IDENTIFIED PORTIONS OF FENCE SHALL BE REMOVED. DURING CONSTRUCTION, INSTALL TEMPORARY FENCING IN THIS AREA UNTIL CONSTRUCTION IN THIS AREA IS COMPLETED SO NEW FENCING IS NOT DAMAGED. UPON COMPLETION OF CONSTRUCTION, INSTALL PROPOSED FENCE AT LOCATION SHOWN. NEW FENCE SHALL BE PROVIDED PER DETAIL 3/00C504 AND SPECIFICATION 32 31 13 – CHAIN LINK FENCE.

LEGEND:

- EXISTING (LIGHT LINE WORK)
- PROPOSED (DARK LINE WORK)
- IPB1 — INLET PROTECTION BARRIER FOR STAGE 1 INLETS, REFER TO 1/00C503
- RFB — REINFORCED FILTER FABRIC BARRIER, REFER TO 2/00C503
- SC — STABILIZED CONSTRUCTION ACCESS, REFER TO 3/00C503

AECOM

AECOM TECHNICAL SERVICES, INC.
19219 KATY FREEWAY, SUITE 100
HOUSTON, TEXAS 77094
WWW.AECOM.COM
TBPE REG. NO. F-3580

AECOM Project No.: 60592253

STATE OF TEXAS
MICHAEL J. ROLEN
55388
REGISTERED PROFESSIONAL ENGINEER
06/28/2019

SAN JACINTO RIVER AUTHORITY
THE WOODLANDS DIVISION

SAN JACINTO RIVER AUTHORITY SJRA www.SJRA.net

GROUND STORAGE TANK NO. 2 AT WATER PLANT NO. 4

ISSUE	DATE	DESCRIPTION
0	06/28/2019	ISSUED FOR CONSTRUCTION

SJRA PROJECT NO: WDPR 0098.1001.2G002
FILE NAME: 01C101.dwg
DRAWN BY: J GARNER
CHECKED BY: K ZHENG
SCALE: AS NOTED
CIVIL

SITE PLAN MODIFICATIONS

SHEET 01C101
SEQ. 15 OF 45

AGENCY REVIEW SUBMITTAL GST NO. 2 AT WP NO. 4

FILE: P:_PWD\SJRA\60592253 – Well Rehab GST No. 2, WP 4\900 CAD, GIS\910-CAD\20-SHEETS\CIVIL\01C101.dwg LAYOUT: 01C101 DATE: 6/27/2019 3:20:33 PM BY: GARNERJ

Date: Jun 27, 2019 – 3:20pm User: garnerj File: P:_PWD\SJRA\60592253 – Well Rehab GST No. 2, WP 4\900 CAD, GIS\910-CAD\20-SHEETS\CIVIL\01C101.dwg

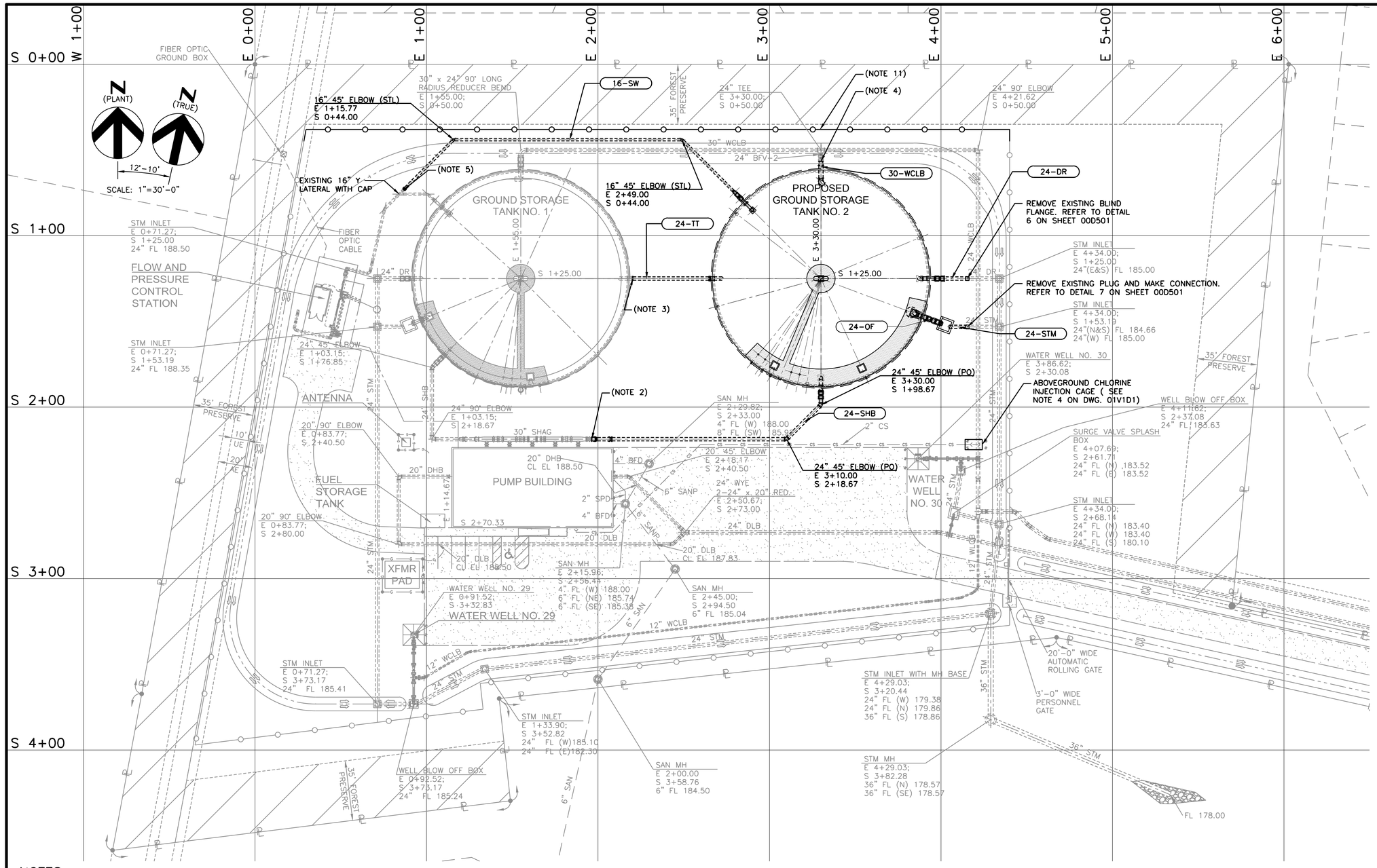

NOTES:

1. REFER TO SPECIFICATION SECTION 40 05 13 FOR PIPING MATERIAL REQUIREMENTS.
2. REMOVE EXISTING 24" BLIND FLANGE AND MAKE CONNECTION. REFER TO DETAIL 4 ON SHEET 00D501.
3. REMOVE EXISTING 24" BLIND FLANGE AND MAKE CONNECTION. REFER TO SECTION "C" ON SHEET 02D301.
4. REMOVE EXISTING 24" BLIND FLANGE AND MAKE CONNECTION. REFER TO SECTION "B" ON SHEET 02D302.
5. CUT EXISTING 16" SW (STL) AT CAP. ADD 16" BUTTERFLY VALVE AND CONNECT (WELD) PROPOSED 16" SW TO EXISTING 16" SW. REFER TO DETAIL 5 ON SHEET 00D501.
6. REFER TO GENERAL CONSTRUCTION NOTE 20, SHEET 00G006.
7. CONTRACTOR HAS FULL RESPONSIBILITY FOR THE PROTECTION OF EXISTING UNDERGROUND PIPES AND VALVES AND MUST PROTECT FROM DAMAGE DUE TO CONTRACTOR'S WORK. CONTRACTOR SHALL, AT HIS OWN EXPENSE, IDENTIFY THE COVER OVER EXISTING PIPING AND ADEQUATELY PROTECT PIPELINE AND VALVES DUE TO LOADS SUCH AS HEAVY EQUIPMENT, EXCAVATED SOIL, AND DEBRIS. THE CONTRACTOR SHALL NOT PLACE DEBRIS PILES THAT PREVENT THE OWNER FROM ACCESS TO THE FACILITIES. CONDITION OF THE EXISTING UNDERGROUND PIPELINES ARE UNKNOWN. CONTRACTOR, AT HIS EXPENSE, SHALL THOROUGHLY ASSESS CONSTRUCTION LOADS SUCH AS SOIL OVERBURDEN, DEBRIS, HEAVY EQUIPMENT OVER EXISTING UNDERGROUND PIPING, AND SHALL PROTECT EXISTING PIPELINES FROM DAMAGE. ANY DAMAGE TO EXISTING PIPELINES WILL BE AT THE CONTRACTOR'S EXPENSE TO REPAIR AND REPLACE DAMAGED PIPELINES.
8. CONTRACTOR SHALL PROVIDE A PLAN DURING CONSTRUCTION FOR LOCATIONS WHERE HEAVY VEHICLES NEED TO CROSS-OVER UNDERGROUND INFRASTRUCTURE AND RELATED APPURTENANCES. THE FINAL DETERMINATION OF LOCATIONS WHERE CROSS-OVER ARE ALLOWED SHALL BE MADE BY SJRA IN CONSULTATION WITH THE ENGINEER.
9. CONTRACTOR SHALL PROVIDE WHATEVER ADDITIONAL SITE ASSESSMENTS OF UNDERGROUND PIPING ARE REQUIRED AT HIS OWN EXPENSE.
10. THE CONTRACTOR SHALL PREPARE PIPE LAY DRAWINGS FOR ALL NEW UNDERGROUND PIPING, BASED ON FIELD VERIFIED DIMENSIONS.
11. REFER TO NOTE 1 ON SHEET 01C101.

LEGEND:

- EXISTING (LIGHT LINE WORK)
- PROPOSED (DARK LINE WORK)

AECOM

AECOM TECHNICAL SERVICES, INC.
19219 KATY FREEWAY, SUITE 100
HOUSTON, TEXAS 77094
WWW.AECOM.COM
TBPE REG. NO. F-3580

AECOM Project No.: 60592253

STATE OF TEXAS
MICHAEL J. ROLEN
55388
REGISTERED PROFESSIONAL ENGINEER
06/28/2019

SAN JACINTO RIVER AUTHORITY
THE WOODLANDS DIVISION

SAN JACINTO RIVER AUTHORITY
SJRA
www.SJRA.net

GROUND STORAGE TANK NO. 2 AT WATER PLANT NO. 4

ISSUE	DATE	DESCRIPTION
0	06/28/2019	ISSUED FOR CONSTRUCTION

SJRA PROJECT NO: WDPR 0098.1001.2G002
FILE NAME: 01C102.dwg
DRAWN BY: J GARNER
CHECKED BY: K ZHENG
SCALE: AS NOTED
CIVIL

YARD PIPING PLAN MODIFICATIONS

SHEET 01C102
SEQ. 16 OF 45

AGENCY REVIEW SUBMITTAL GST NO. 2 AT WP NO. 4

FILE: P:_PWD\SJRA\60592253 - Well Rehab GST No. 2, WP 4\900 CAD, GIS\910-CAD\20-SHEETS\CIVIL\01C102.dwg LAYOUT: Layout1 DATE: 6/27/2019 3:20:58 PM BY: GARNERJ

Date: Jun 27, 2019 - 3:20pm User: garnerj File: P:_PWD\SJRA\60592253 - Well Rehab GST No. 2, WP 4\900 CAD, GIS\910-CAD\20-SHEETS\CIVIL\01C102.dwg

GENERAL STRUCTURAL NOTES (GSN)

GENERAL:

G1. SCOPE
THE NOTES ON THIS SHEET AND THE STANDARD STRUCTURAL DETAILS ARE GENERAL AND APPLY TO THE ENTIRE PROJECT WHETHER SPECIFICALLY CALLED OUT OR NOT, EXCEPT WHERE THERE ARE SPECIFIC INDICATIONS TO THE CONTRARY ON STRUCTURAL SHEETS. IF THERE ARE QUESTIONS, THEY SHALL BE SUBMITTED TO THE STRUCTURAL ENGINEER AND ANSWERED IN WRITING PRIOR TO CONSTRUCTION.

G2. APPLICABLE SPECIFICATIONS AND CODES
A. INTERNATIONAL BUILDING CODE, IBC 2012 WITH APPLICABLE EDITIONS OF THE CODE REFERENCED STANDARDS.
B. ACI 318-11
C. ASCE 7-10
D. LOCAL JURISDICTION AMENDMENTS
E. AISC STEEL CONSTRUCTION MANUAL, 14TH EDITION

G3. DESIGN CRITERIA
APPLIES TO ALL STRUCTURES (UNO)
A. DEAD LOAD:
1. ACTUAL TRIBUTARY STRUCTURE WEIGHT
B. LIVE LOAD:
1. ROOF: 20 PSF (NOT REDUCIBLE)
C. WIND:
1. BASIC WIND SPEED: 134 MPH
2. EXPOSURE: C
D. SEISMIC:
1. ABOVE GRADE, WATER BEARING STRUCTURES:
a. OCCUPANCY CATEGORY III
b. IMPORTANCE FACTOR: 1.25
c. SPECTRAL RESPONSE ACCELERATION, SS = 0.074
d. SPECTRAL RESPONSE ACCELERATION, S1 = 0.04
e. SITE CLASS: D
f. SEISMIC DESIGN CATEGORY: A
g. SPECTRAL RESPONSE COEFFICIENT, SDS = 0.079
h. SPECTRAL RESPONSE COEFFICIENT, SD1 = 0.064
E. SNOW LOAD:
1. GROUND SNOW LOAD = 5 PSF

G4. GEOTECHNICAL REPORT PROVIDED SEPARATELY

G5. SAFETY
SAFETY AND STRUCTURE STABILITY DURING CONSTRUCTION ARE THE SOLE RESPONSIBILITY OF THE CONTRACTOR. STRUCTURES HAVE BEEN DESIGNED TO RESIST THE DESIGN LIVE LOADS ONLY AS A COMPLETED STRUCTURE. PROVIDE TEMPORARY BRACING AND SHORING AS REQUIRED FOR STABILITY DURING CONSTRUCTION.

G6. OPENINGS
OPENINGS FOR PIPES, DUCTS, CONDUITS, ETC. ARE NOT ALL SHOWN ON THE STRUCTURAL SHEETS. COORDINATE AND PROVIDE OPENINGS AS REQUIRED TO ACCOMMODATE ALL WORK SHOWN OR SPECIFIED IN THE CONTRACT DOCUMENTS AND OTHERWISE REQUIRED FOR THE FURNISHING OF A FUNCTIONALLY COMPLETE PROJECT. REINFORCE AROUND OPENINGS PER STANDARD STRUCTURAL DETAILS UNLESS OTHERWISE SHOWN.

G7. THE CONTRACTOR SHALL FIELD VERIFY ALL DIMENSIONS AND ELEVATIONS OF EXISTING CONSTRUCTION AS REQUIRED TO COORDINATE NEW CONSTRUCTION. SUBMIT REQUIRED CHANGES FOR APPROVAL.

G8. CONTRACTOR TO SUBMIT FOR REVIEW ALL EQUIPMENT SIZES, OPERATING WEIGHTS, VIBRATION FORCES, SUPPORT LOCATIONS, ALONG WITH ANY FLOOR OPENINGS, NOTCHES, AND RECESSES REQUIRED BY SUCH EQUIPMENT. CONCRETE SUPPORT PADS AND/OR FRAMING REQUIRED TO SUPPORT SAID EQUIPMENT SHALL NOT BE FABRICATED AND PLACED UNTIL THE CONCRETE SUPPORT PADS AND/OR FRAMING IS APPROVED TO SUPPORT THE EQUIPMENT.

G9. SEE CIVIL SHEETS FOR ALL EXTERIOR PAVING AND FLATWORK.

G10. ALL WATERSTOPS SHALL BE 6 IN PVC, UNLESS NOTED OTHERWISE. THE CONTRACTOR SHALL BE RESPONSIBLE TO MAKE ALL WATERSTOPS CONTINUOUS AND ALL JOINTS LEAK-FREE AS REQUIRED.

G11. CONTRATOR SHALL BE RESPONSIBLE FOR REPAIRING ANY LEAKS IN WATER-BEARING STRUCTURES UTILIZING EPOXY INJECTION MATERIALS

G12. SHOP DRAWINGS SHALL BE FURNISHED FOR REVIEW BEFORE ANY FABRICATION AND ERECTION. POORLY EXECUTED SHOP DRAWINGS OR CONTRACT DRAWINGS USED FOR SHOP DRAWINGS WILL BE REJECTED.

CONCRETE:

C1. CAST-IN-PLACE CONCRETE UTILIZING EPOXY
A. F'C = 4,500 PSI @ 28 DAYS
B. TYPE I OR II ASTM C150 CEMENT
C. MAXIMUM WATER CEMENT RATIO = 0.45
D. MAXIMUM CLASS C FLYASH = 20%

C2. ALL REINFORCING STEEL SHALL CONFORM TO ASTM A615, GRADE 60 (Fy=60 KSI)

C3. ALL SPLICES SHALL BE CLASS B, TENSION LAPS UNLESS NOTED OTHERWISE.

C4. DOWEL CONCRETE WALL INTO FOOTING AND BASE SLABS WITH DOWELS THE SAME SIZE AND SPACING AS VERTICAL REINFORCEMENT UNLESS NOTED OTHERWISE. EXTEND DOWELS TO WITHIN 3" OF BOTTOM OF FOOTING, TERMINATE WITH 90 DEGREE ACI STANDARD HOOK.

C5. CONCRETE COVER
UNLESS OTHERWISE NOTED, PROVIDE CONCRETE COVER FOR REINFORCING AS FOLLOWS:
CONCRETE CAST AGAINST AND PERMANENTLY EXPOSED TO EARTH: 3"
ALL OTHER: 2"
SEE SHEETS FOR EXCEPTIONS

C6. SEE SPECIFICATIONS FOR REINFORCING PLACEMENT REQUIREMENTS.

C7. REFER TO OTHER DISCIPLINE DRAWINGS PRIOR TO CONSTRUCTION FOR EMBEDDED ITEMS AND PENETRATIONS NOT SHOWN ON STRUCTURAL DRAWINGS. AS REQUIRED TO ACCOMMODATE ALL WORK SHOWN OR SPECIFIED IN THE CONTRACT DOCUMENTS AND OTHERWISE REQUIRED FOR THE FURNISHING OF A FUNCTIONALLY COMPLETE PROJECT. REINFORCE AROUND OPENINGS PER STANDARD STRUCTURAL DETAILS UNLESS OTHERWISE SHOWN.

C8. PROVIDE 3/4" CHAMFERS AT ALL EXPOSED EDGES AND 1/2" CHAMFERS AT JOINTS AS SHOWN. NOT ALL CHAMFERS MAY BE SHOWN ON DRAWINGS. UNLESS NOTED OTHERWISE.

C9. FIELD ADJUST REINFORCING AT OPENINGS AND EMBEDDED ITEMS AS INDICATED.

C10. ANCHOR BOLTS NOT SPECIFIED BY ENGINEER SHALL BE DESIGNED AND CERTIFIED BY A REGISTERED PROFESSIONAL ENGINEER, RETAINED BY THE CONTRACTOR, IN ACCORDANCE WITH APPLICABLE PROJECT AND CODE REQUIREMENTS. SUBMIT AS A SHOP DRAWING FOR REVIEW AND APPROVAL BY THE ENGINEER. COORDINATE LOCATION, SIZE AND EMBEDMENT PRIOR TO CASTING CONCRETE.

C11. ABSOLUTELY NO WELDING OF REINFORCING BARS OR TORCHING TO BEND REINFORCING BARS SHALL BE ALLOWED WITHOUT SPECIFIC APPROVAL FROM THE STRUCTURAL ENGINEER.

C12. CONTRACTOR SHALL SUBMIT A CONCRETE PLACEMENT PLAN PER SPECIFICATION 03 31 31 IDENTIFYING JOINT TYPES, JOINT LOCATIONS AND CONCRETE PLACEMENT SEQUENCE.

C13. ALL CAST IN PLACE AND POST-INSTALLED ANCHORS INDICATED IN THE STRUCTURAL DOCUMENTS SHALL COMPLY WITH APPENDIX D OF ACI 318 AND CHAPTER 19 OF THE IBC. ALL EXPANSION AND ADHESIVE ANCHORS SHALL HAVE THE ICC REPORT SHOWING EQUIVALENT LOAD CAPACITY. SUBMIT AND INSTALL PER THE ICC EVALUATION REPORT.

C14. ALL POST INSTALLED DRILL AND EPOXY ANCHORING IN TO CONCRETE SHALL BE HILTI HIT-HY 200 ADHESIVE ANCHORING SYSTEM OR APPROVED EQUAL, WITH 3/4" DIA MINIMUM A36 ANCHOR WITH 6" MINIMUM EMBED UNLESS NOTED OTHERWISE.

C15. PRIOR TO INSTALLING POST INSTALLED ANCHORS INTO CONCRETE, THE CONTRACTOR SHALL LOCATE REINFORCING. DO NOT DAMAGE CONCRETE REINFORCING.

C16. CONDUITS AND PIPING EMBEDDED IN CONCRETE SHALL BE SPACED TO ALLOW A MINIMUM OF 4" BETWEEN THE CONDUITS OR PIPING. UNLESS NOTED OTHERWISE.

C17. ALL CONCRETE WORK SHALL BE IN ACCORDANCE WITH LASTED EDITIONS OF ACI 318, ACI 350 AND ACI 301.

C18. ALL CONCRETE SHALL BE PLACED IN CONFORMANCE WITH ACI 117.

C19. FOUR 6" X 12" (OR SIX 4" X 8") CONCRETE CYLINDERS SHALL BE MADE FOR EACH 75 CUBIC YARDS, OR FRACTION THEREOF, OF EACH CLASS OF CONCRETE PLACED IN ANY ONE DAY. TEST ONE AT 7 DAYS, TWO 6" X 12" (OR THREE 4" X 8") CYLINDERS AT 28 DAYS AND RESERVE ONE 6" X 12" (OR TWO 4" X 8") CYLINDERS FOR VERIFICATION. CONCRETE SLUMP, TEMPERATURE, AND AIR CONTENT SHALL BE MEASURED EVERY TIME A SET OF CYLINDERS IS MADE.

C20. FORMED CONSTRUCTION JOINTS SHALL BE KEYED. CONSTRUCTION JOINTS AT UNFORMED SURFACE OR INTERSECTIONS SHALL BE INTENTIONALLY ROUGHENED TO 1/4" MINIMUM AMPLITUDE.

STEEL:

S1. MATERIALS SHALL CONFORM TO THE STANDARDS AND DESIGN STRENGTHS LISTED:

WIDE FLANGE AND TEES:	Fy=50 KSI, ASTM A992, GRADE 50
PIPES:	Fy=35 KSI, ASTM A501
STAINLESS STEEL:	Fy=33 KSI, ASTM A276
HSS SECTIONS:	Fy=46 KSI, ASTM A500, GRADE B
ALL OTHER PLATES AND SHAPES:	Fy=36 KSI, ASTM A36
ALL STRUCTURAL BOLTS:	Fy=120 KSI, ASTM F3125
STAINLESS STEEL BOLTS:	ASTM F593, AISI 304

S2. DIMENSIONS: TO CENTERLINES OF COLUMNS AND BEAMS, TOP SURFACES OF BEAMS AND TUBES AND BACKS OF CHANNELS AND ANGLES UNO.

S3. ELEVATIONS: TOP OF STEEL REFERS TO TOP SURFACE OF MEMBER OR FLANGE UNO.

S4. WHEN FILLET WELD SIZE IS NOT INDICATED, PROVIDE MAXIMUM WELD SIZE BASED ON MATERIAL THICKNESS IN ACCORDANCE WITH AISC SPECIFICATIONS.

S5. ALL WELDING SHALL BE DONE BY CERTIFIED WELDERS AND SHALL BE DONE IN ACCORDANCE WITH THE LATEST AISC AND AWS STANDARDS.

S6. ALL BOLTED STRUCTURAL CONNECTIONS ARE BEARING TYPE CONNECTIONS UNLESS OTHERWISE SPECIFIED TO BE SLIP-CRITICAL. PROVIDE LOAD INDICATING WASHERS AT SLIP-CRITICAL CONNECTIONS.

S7. ALL STRUCTURAL STEEL FABRICATION AND STEEL ERECTION SHALL CONFORM TO AISC 360, STEEL CONSTRUCTION MANUAL AND AISC 341, SEISMIC DESIGN MANUAL.

EXCAVATION AND BACKFILL:

EB1. REFER TO 2/00S501 FOR TYPICAL EXCAVATION AND BACKFILL DETAILS.

EB2. CONSTRUCTION AREAS SHALL BE STRIPPED OF ALL VEGETATION, LOOSE/SOFT TOPSOIL, AND ANY OTHER DEBRIS/UNSUITABLE MATERIAL. A MINIMUM OF 72" OF WEAK SOIL BELOW EXISTING GRADE SHALL BE REMOVED. THE OWNER'S REPRESENTATIVE (SOILS ENGINEER) SHALL BE ON-SITE DURING REMOVAL OF THE FILL SOILS TO EVALUATE THE EXPOSED SUBGRADE.

EB3. THE EXPOSED SUBGRADE SHALL BE CAREFULLY PROOF ROLLED WITH A 20-TON PNEUMATIC ROLLER TO DETECT WEAK ZONES IN THE SUBGRADE. WEAK AREAS DETECTED DURING PROOF ROLLING, AS WELL AS ZONES OF FILL CONTAINING ORGANIC MATTER AND/OR DEBRIS SHALL BE REMOVED AND REPLACED WITH SOILS EXHIBITING SIMILAR CLASSIFICATION, MOISTURE CONTENT, AND DENSITY AS THE ADJACENT IN-SITU SOILS. PROOF ROLLING SHALL BE PERFORMED UNDER THE DIRECT OBSERVATION OF THE GEOTECHNICAL ENGINEER OR HIS/HER REPRESENTATIVE.

EB4. PROVIDE POSITIVE SURFACE DRAINAGE AWAY FROM THE LOCATION OF ALL EXCAVATIONS TO PREVENT SURFACE WATER RUNOFF FROM FLOODING THE PREPARED SITE AND EXCAVATIONS. PRIOR TO EXCAVATION, CONTRACTOR MUST SUBMIT DOCUMENTATION FOR DRAINAGE PLAN TO OWNER'S REPRESENTATIVE.

EB5. SUBSEQUENT TO PROOF ROLLING, AND JUST PRIOR TO PLACEMENT OF FILL, THE EXPOSED SUBGRADE WITHIN THE CONSTRUCTION AREA SHALL BE SCARIFIED TO A MINIMUM DEPTH OF 6 INCHES. ADJUST THE MOISTURE TO WITHIN 2 PERCENT OF THE MATERIAL'S OPTIMUM MOISTURE CONTENT AND COMPACT TO AT LEAST 95% OF THE STANDARD EFFORT (ASTM D698) MAXIMUM DRY DENSITY.

EB6. CONTRACTOR MAY USE LIME/FLY ASH CHEMICALLY TREATED SELECT FILL OR SUITABLE ON-SITE SOILS FOR TANK FOUNDATION AS DEFINED IN DRAWINGS AND SPECIFICATIONS. COMPACTION REQUIREMENTS TO AND CHEMICAL TREATMENT TO FOLLOW INSTRUCTIONS PROVIDED IN THE GEOTECHNICAL REPORT.

EB7. ALL GRADES MUST PROVIDE EFFECTIVE DRAINAGE AWAY FROM THE PROPOSED GROUND STORAGE TANK DURING AND AFTER CONSTRUCTION. EXPOSED GROUND SHALL BE SLOPED AWAY FROM THE STRUCTURE FOR AT LEAST 6 INCHES OF FALL OVER 10 FEET (5 PERCENT SLOPE) BEYOND THE PERIMETER OF THE STRUCTURE. AFTER CONSTRUCTION, TANK MANUFACTURER TO VERIFY FINAL GRADES TO DOCUMENT THAT EFFECTIVE DRAINAGE HAS BEEN ACHIEVED.

EB8. ALL UTILITY TRENCHES THAT PENETRATE BENEATH THE STRUCTURE MUST BE EFFECTIVELY SEALED TO RESTRICT WATER INTRUSION AND FLOW THROUGH THE TRENCHES THAT COULD MIGRATE BELOW THE STRUCTURE. AN EFFECTIVE CLAY "TRENCH PLUG" THAT EXTENDS AT LEAST 5 FEET OUT FROM THE FACE OF THE STRUCTURES' EXTERIORS MUST BE CONSTRUCTED. THE PLUG MATERIAL TO CONSIST OF CLAY COMPACTED AT A WATER CONTENT AT OR ABOVE THE SOILS OPTIMUM WATER CONTENT. THE CLAY FILL SHALL BE PLACED TO COMPLETELY SURROUND THE UTILITY LINE AND BE COMPACTED IN ACCORDANCE WITH SPECIFICATIONS.

FOUNDATION:

F1. BACKFILL FOUNDATION STEM WALLS EQUALLY ON EACH SIDE.

F2. DO NOT BACKFILL UNTIL CONCRETE STRENGTH HAS REACHED SPECIFIED 28 DAY STRENGTH.

F3. ALL BELOW GRADE FOUNDATION ELEMENTS ARE DESIGNED WITH FORMED SIDES, UNLESS OTHERWISE NOTED. ALL CONCRETE EXPOSED TO VIEW IN THE FINAL CONDITION SHALL BE FORMED.

SPECIAL INSPECTION:

SI1. SPECIAL INSPECTIONS SHALL BE PROVIDED IN ACCORDANCE WITH CHAPTER 1 AND CHAPTER 17 OF THE IBC AS FOLLOWS:
CONCRETE CONSTRUCTIONS: TABLE 1705.3
SOILS: TABLE 1705.6
POST INSTALLED AND CAST IN ANCHORS: 1705.3

SI2. PAYMENT FOR THESE INSPECTIONS IS NOT THE RESPONSIBILITY OF THE CONTRACTOR. THE CONTRACTOR SHALL PROVIDE FOR FULL ACCESS TO THE WORK IN THE SPECIAL INSPECTION AND SHALL PROVIDE FOR THESE INSPECTIONS IN HIS CONSTRUCTION SCHEDULE.

AGENCY REVIEW SUBMITTAL GST NO. 2 AT WP NO. 4

AECOM
AECOM TECHNICAL SERVICES, INC.
19219 KATY FREEWAY, SUITE 100
HOUSTON, TEXAS 77094
WWW.AECOM.COM
TBPE REG. NO. F-3580

AECOM Project No.: 60592253

STATE OF TEXAS
ROBERT E. HAWTHORNE
83619
REGISTERED PROFESSIONAL ENGINEER
06/28/2019

SAN JACINTO RIVER AUTHORITY
THE WOODLANDS DIVISION

GROUND STORAGE TANK NO. 2 AT WATER PLANT NO. 4

ISSUE	DATE	DESCRIPTION
0	06/28/2019	ISSUED FOR CONSTRUCTION

SJRA PROJECT NO: WDPR 0098.1001.2G002
FILE NAME: 00S001.dwg
DRAWN BY: J GARNER
CHECKED BY: K ZHENG
SCALE: NONE
STRUCTURAL

STRUCTURAL NOTES

SHEET 00S001
SEQ. 17 OF 45

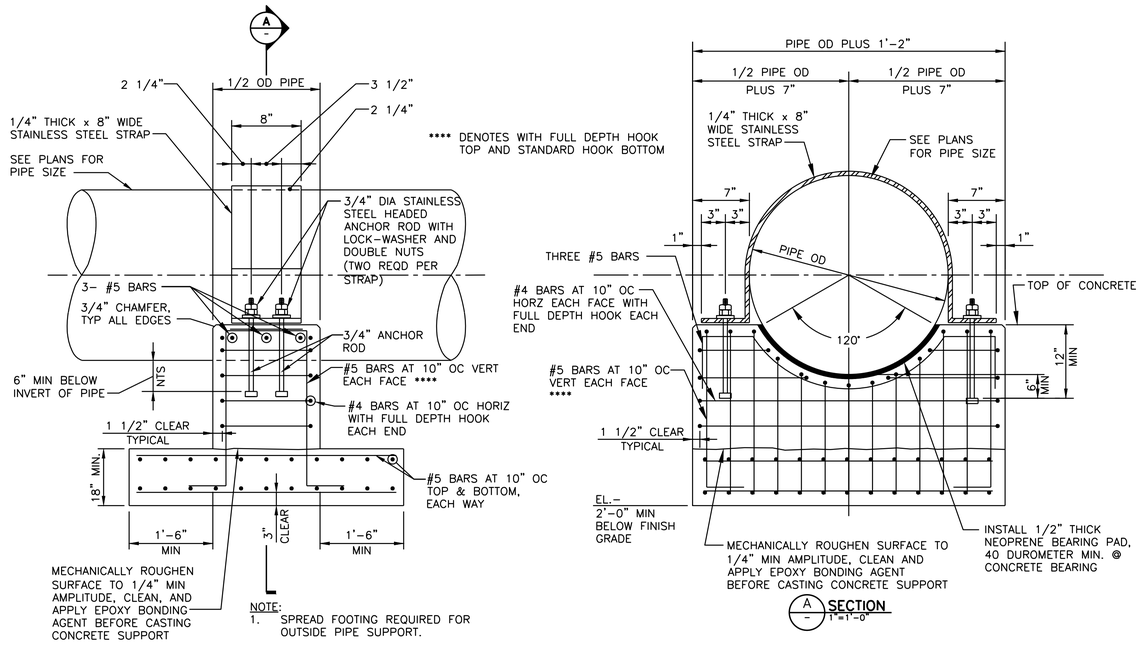

1 OUTSIDE PIPE SUPPORT WITH STRAP 1"=1'-0"

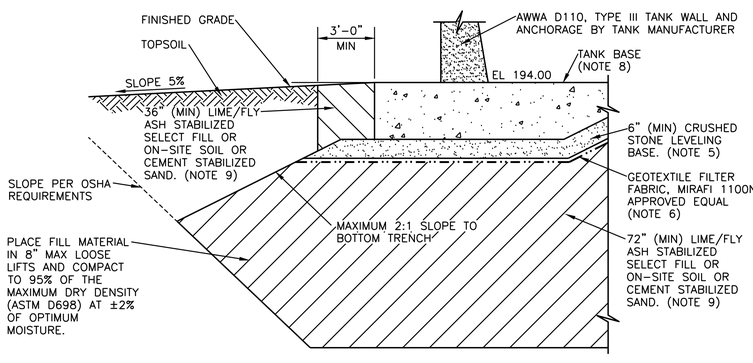

2 TANK FOUNDATION SCHEMATIC NOT TO SCALE

NOTES:

1. TANK FOUNDATION TO BE PREPARED PER RECOMMENDATIONS IN THE PROJECT SPECIFIC GEOTECHNICAL REPORT.
2. EXPOSED SUBGRADE SHALL BE PROOFROLLED AND OBSERVED BY A GEOTECHNICAL ENGINEER AND THEN EVALUATED FOR MOISTURE AND DENSITY, PER RECOMMENDATIONS IN THE GEOTECHNICAL REPORT.
3. CONTRACTOR TO MAINTAIN PROPER SITE DRAINAGE AWAY FROM TANK EXCAVATION ZONES AT ALL TIMES.
4. MATERIAL AND COMPACTION REQUIREMENTS (ACI 372R) FOR BACKFILL FOR TANK SHALL FOLLOW RECOMMENDATIONS IN THE GEOTECHNICAL REPORT AS IDENTIFIED IN "SELECT FILL AND ON-SITE SOILS ARE TO BE CHEMICALLY TREATED PER REQUIREMENTS OF PROJECT SPECIFIC GEOTECHNICAL REPORT AND SPECIFICATION SECTION 33 16 14."
5. CRUSHED STONE LEVELING BASE (AGGREGATE BASE MATERIAL) AND THICKNESS OF LAYER SHALL BE PER TANK MANUFACTURER'S STANDARD PRACTICE.
6. SEPARATOR FABRIC SHALL BE INSTALLED BETWEEN CRUSHED STONE BASE AND SELECT FILL LAYER, IF REQUIRED, PER TANK MANUFACTURER'S RECOMMENDATIONS.
7. EXPOSED GROUND SHALL BE SLOPED AWAY FROM THE STRUCTURE FOR AT LEAST 6 INCHES OF FALL OVER 10 HORIZONTAL FEET (5% SLOPE) BEYOND THE PERIMETER OF THE STRUCTURE.
8. CONCRETE SLAB THICKNESS SHALL BE DETERMINED BY TANK MANUFACTURER.
9. IN ORDER TO ACHIEVE 2,900 PSF BEARING PRESSURE FOR THE PERIMETER THICKENED SLAB, SELECT FILL AND LISTED ON-SITE SOILS (SC WITH $10 \leq PI \leq 20$) FOR GRADING AND TO CONSTRUCT THE PAD BELOW THE THICKENED EDGE MUST BE CHEMICALLY TREATED. THE CHEMICALLY TREATED SELECT FILL AND LISTED ON-SITE SOILS SHOULD EXTEND A MINIMUM OF 3 FEET BEYOND THE EDGES OF THE THICKENED-EDGE FOOTING. THE SELECT FILL AND LISTED ON-SITE SOILS SHOULD BE TREATED WITH LIME-FLY ASH APPLIED AS 2 TO 3 PERCENT LIME AND 7 TO 8 PERCENT FLY ASH. THE PERCENTAGES ARE GIVEN AS APPLICATION BY DRY WEIGHT OF SOIL, AND ARE TYPICALLY EQUIVALENT TO ABOUT 13 TO 20 POUNDS OF LIME AND 47 TO 53 POUNDS OF FLY ASH PER SQUARE YARD PER 8-INCH DEPTH. LIME-FLY ASH IS ALSO AVAILABLE PRE-MIXED, TYPICALLY IN PERCENTAGES OF 20 TO 30 PERCENT LIME AND 70 TO 80 PERCENT FLY ASH. THESE PRE-MIXED PRODUCTS MAY BE USED IF PREFERRED AT A RATE OF 67 POUNDS PER SQUARE YARD PER 8-INCH DEPTH. THE SUBGRADE SHOULD BE TREATED IN ACCORDANCE WITH TXDOT STANDARD SPECIFICATION ITEM 265 FOR LIME/FLY ASH TREATED SUBGRADE. IF PREFERRED, CEMENT TREATED SAND MAY BE USED IN PLACE OF THE CHEMICALLY TREATED SELECT FILL BELOW THE PERIMETER THICKENED EDGE. IF CEMENT TREATED SAND IS USED, CEMENT SHOULD BE APPLIED AT A RATE OF 1.5 SACKS PER TON OF SAND.

AGENCY REVIEW SUBMITTAL GST NO. 2 AT WP NO. 4

AECOM
AECOM TECHNICAL SERVICES, INC.
19219 KATY FREEWAY, SUITE 100
HOUSTON, TEXAS 77094
WWW.AECOM.COM
TBPE REG. NO. F-3580

AECOM Project No.: 60592253

STATE OF TEXAS
ROBERT E. HAWTHORNE
83619
REGISTERED PROFESSIONAL ENGINEER
06/28/2019

SAN JACINTO RIVER AUTHORITY
THE WOODLANDS DIVISION

SAN JACINTO RIVER AUTHORITY SJRA www.SJRA.net

GROUND STORAGE TANK NO. 2 AT WATER PLANT NO. 4

ISSUE	DATE	DESCRIPTION
0	06/28/2019	ISSUED FOR CONSTRUCTION

SJRA PROJECT NO: WDPR 0098.1001.2G002
FILE NAME: 00S501.dwg
DRAWN BY: J GARNER
CHECKED BY: E FUERSCHBACH
SCALE: AS NOTED
STRUCTURAL

STRUCTURAL DETAILS

SHEET 00S501
SEQ. 18 OF 45

FILE: P:_PWD\SJRA\60592253 - Well Rehab GST No. 2, WP 4\900 CAD, GIS\910-CAD\20-SHEETS\STRUCTURAL\00S501.dwg LAYOUT: 00D502 DATE: 6/28/2019 6:04:53 AM BY: GARNERJ

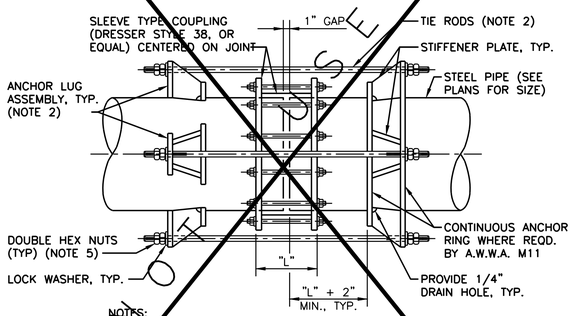

NOTES:

1. DESIGN SHALL BE PER THE SPECIFICATIONS.
2. NUMBER, SIZES, AND DESIGN OF ANCHOR LUG ASSEMBLIES AND TIE RODS SHALL BE DETERMINED BY THE PIPE MANUFACTURER IN ACCORDANCE WITH A.W.W.A. M11 STEEL PIPE MANUAL.
3. GRIND ALL CORNERS SMOOTH.
4. COAT ALL SURFACES PER THE SPECIFICATIONS.
5. DOUBLE HEX NUTS SHALL BE PROVIDED AS LOCK-NUTS AND SHALL BE FINGER TIGHTENED AGAINST ANCHOR PLATES.

1 ANCHOR LUG TYPE HARNESSED COUPLING DETAIL
NOT TO SCALE

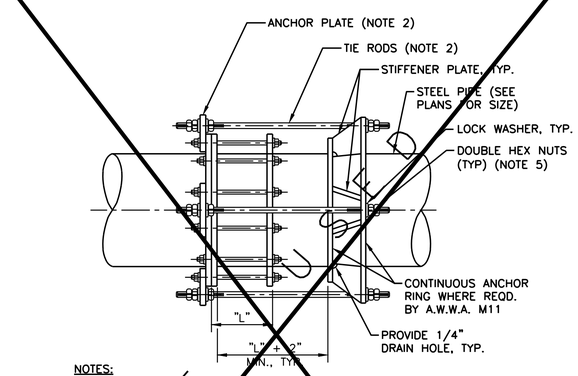

NOTES:

1. DESIGN SHALL BE PER THE SPECIFICATIONS.
2. NUMBER, SIZES, AND DESIGN OF ANCHORING STIFFENING PLATES ASSEMBLIES, ANCHOR PLATES AND TIE RODS SHALL BE DETERMINED BY THE PIPE MANUFACTURER IN ACCORDANCE WITH A.W.W.A. M11 STEEL PIPE MANUAL.
3. GRIND ALL CORNERS SMOOTH.
4. COAT ALL SURFACES PER THE SPECIFICATIONS.
5. DOUBLE HEX NUTS SHALL BE PROVIDED AS LOCK-NUTS AND SHALL BE FINGER TIGHTENED AGAINST ANCHOR PLATES.

2 RESTRAINED FLANGE COUPLING ADAPTER
NOT TO SCALE

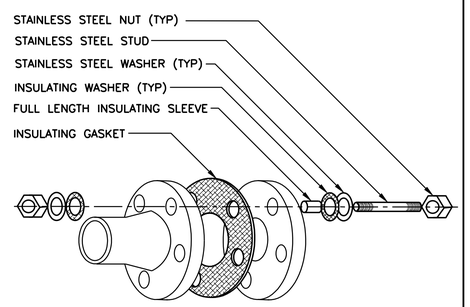

3 DIELECTRIC INSULATING FLANGE KIT
NOT TO SCALE

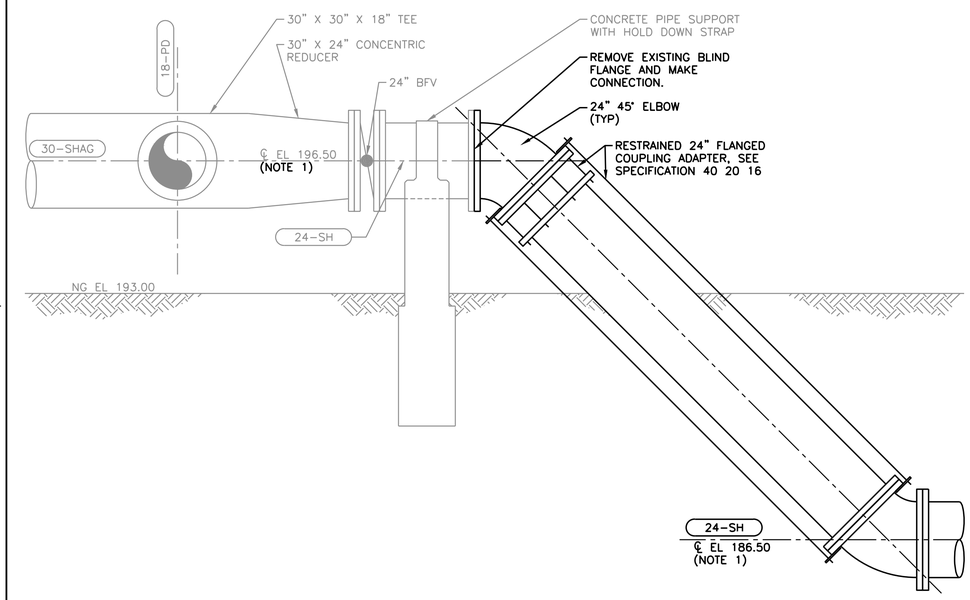

4 SUCTION HEADER CONNECTION AT PUMP BUILDING SECTION
NOT TO SCALE

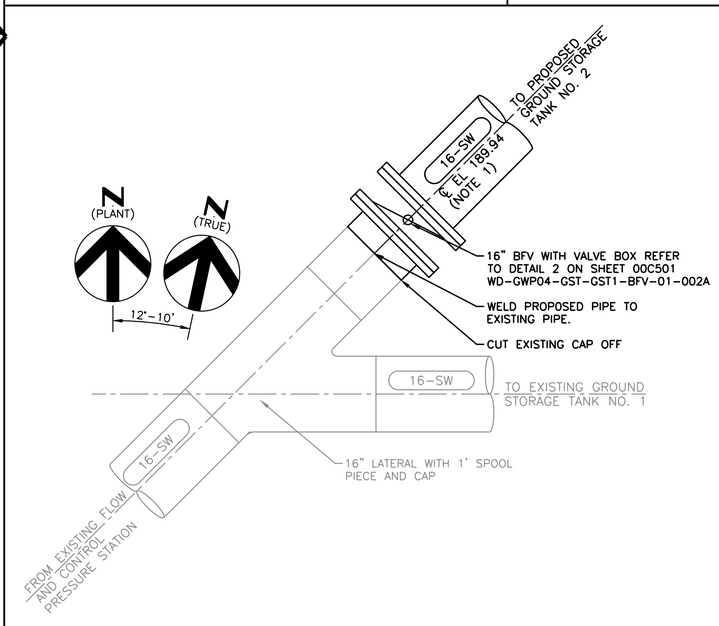

5 SURFACE WATER CONNECTION TO EXISTING SURFACE WATER PIPE
NOT TO SCALE

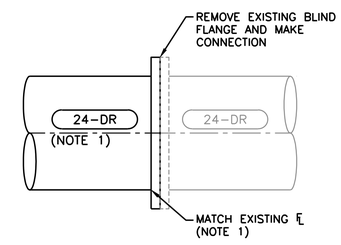

6 TANK DRAIN CONNECTION TO EXISTING INLET STUB OUT
NOT TO SCALE

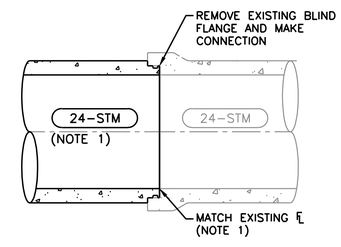

7 TANK STORM CONNECTION TO EXISTING INLET STUB OUT
NOT TO SCALE

LEGEND:

EXISTING (LIGHT LINE WORK)

PROPOSED (DARK LINE WORK)

NOTES:

1. REFER TO NOTES 1 AND 3 ON SHEET 02D101.

AECOM
AECOM TECHNICAL SERVICES, INC.
19219 KATY FREEWAY, SUITE 100
HOUSTON, TEXAS 77094
WWW.AECOM.COM
TBPE REG. NO. F-3580

AECOM Project No.: 60592253

STATE OF TEXAS
XUAN ZHENG
127444
LICENSED PROFESSIONAL ENGINEER
Xuan Zheng
06/28/2019

SAN JACINTO RIVER AUTHORITY
THE WOODLANDS DIVISION

GROUND STORAGE TANK NO. 2 AT WATER PLANT NO. 4

ISSUE	DATE	DESCRIPTION
0	06/28/2019	ISSUED FOR CONSTRUCTION

SJRA PROJECT NO: WDPR 0098.1001.2G002
FILE NAME: 00D501.dwg
DRAWN BY: J GARNER
CHECKED BY: K KHENG
SCALE: AS NOTED
PROCESS

PROCESS DETAILS

SHEET 00D501
SEQ. 19 OF 45

AGENCY REVIEW SUBMITTAL GST NO. 2 AT WP NO. 4

FILE: P:_PWD\SJRA\60592253 - Well Rehab GST No. 2, WP 4\900 CAD, GIS\910-CAD\20-SHEETS\PROCESS\00D501.dwg LAYOUT: 00D501 DATE: 6/27/2019 3:21:38 PM BY: GARNERJ

Date: Jun 27, 2019 - 3:21pm User: garnerj File: P:_PWD\SJRA\60592253 - Well Rehab GST No. 2, WP 4\900 CAD, GIS\910-CAD\20-SHEETS\PROCESS\00D501.dwg

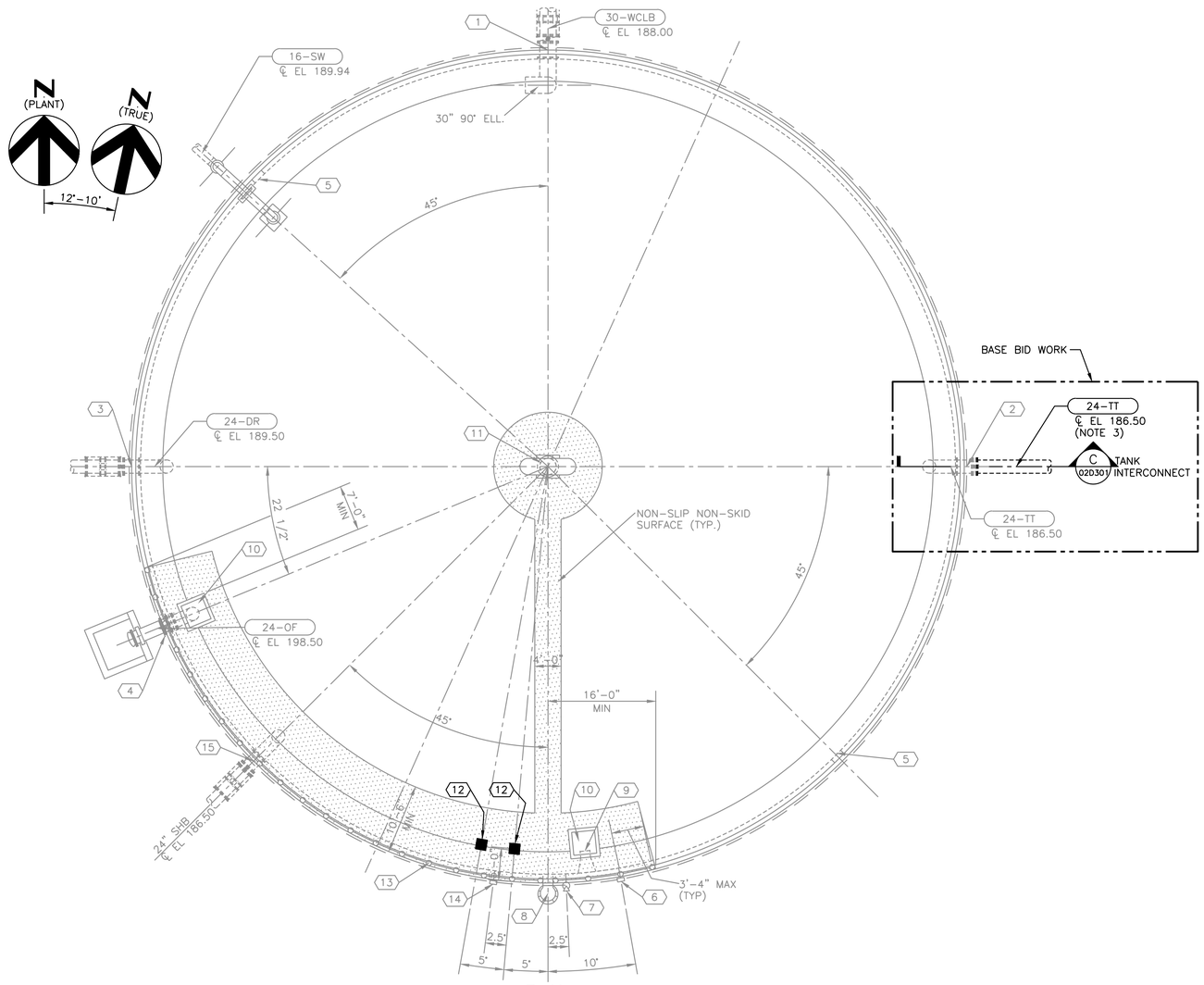

PLAN

NTS

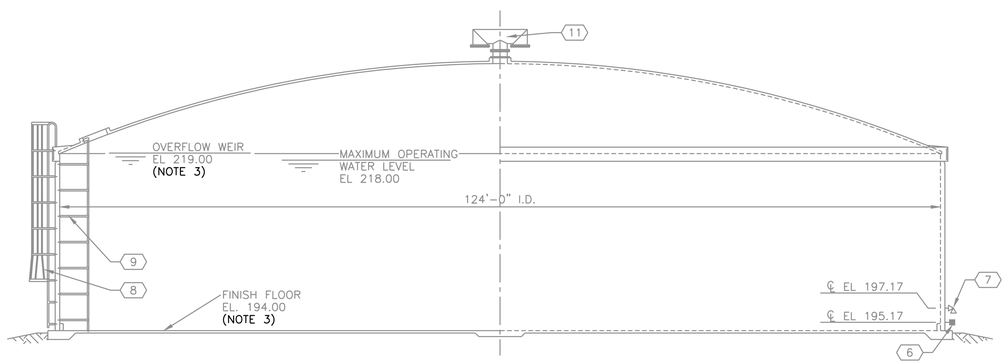

TANK SECTIONAL ELEVATION

NTS

KEY/NOTES

- (XX) NAME DESIGNATION
- (1) TANK GROUNDWATER CONNECTION
- (2) TANK INTERCONNECTION
- (3) TANK DRAIN CONNECTION
- (4) TANK OVERFLOW CONNECTION
- (5) WALL ACCESS HATCH
- (6) TANK LEVEL INDICATOR CONNECTION
- (7) SAMPLE FAUCET
- (8) OUTSIDE LADDER
- (9) INSIDE LADDER
- (10) TYPICAL ROOF HATCH
- (11) ROOF VENT
- (12) RADAR LEVEL SENSOR INSTALLATION ON GST ROOF — 2 / 00E502
- (13) TYPICAL HANDRAIL
- (14) TANK LEVEL TRANSMITTER
- (15) TANK OUTLET CONNECTION

GENERAL REPAINTING NOTES:

1. ALL WORK SHOWN ON THIS SHEET IS AN ALTERNATE BID ITEM UNLESS OTHERWISE NOTED.
2. SEE SPECIFICATION SECTION 01 11 13 – WORK COVERED BY CONTRACT DOCUMENTS FOR A SUMMARY OF EQUIPMENT AND ITEMS TO BE PAINTED, REPAIRED, OR REPLACED. MISCELLANEOUS VALVES, FITTINGS, PIPING, AND APPURTENANCES SHALL BE INCLUDED IN THE WORK COVERED BY CONTRACTS, EXCEPT WHERE NOTED.
3. REFER TO NOTES 1 AND 3 ON SHEET 02D101.

AECOM

AECOM TECHNICAL SERVICES, INC.
19219 KATY FREEWAY, SUITE 100
HOUSTON, TEXAS 77094
WWW.AECOM.COM
TBPE REG. NO. F-3580

AECOM Project No.: 60592253

STATE OF TEXAS
XUAN ZHENG
127444
LICENSED PROFESSIONAL ENGINEER
06/28/2019

SAN JACINTO RIVER AUTHORITY
THE WOODLANDS DIVISION

SAN JACINTO RIVER AUTHORITY
SJRA
www.SJRA.net

GROUND STORAGE TANK NO. 2 AT WATER PLANT NO. 4

ISSUE	DATE	DESCRIPTION
0	06/28/2019	ISSUED FOR CONSTRUCTION

SJRA PROJECT NO: WDPR 0098.1001.2G002
FILE NAME: 02X101.dwg
DRAWN BY: J GARNER
CHECKED BY: K ZHENG
SCALE: AS NOTED

EXISTING

EXISTING GROUND STORAGE TANK NO. 1 PLAN AND SECTION

SHEET 02X101
SEQ. 20 OF 45

LEGEND:
- EXISTING (LIGHT LINE WORK)
- PROPOSED (DARK LINE WORK)

AGENCY REVIEW SUBMITTAL GST NO. 2 AT WP NO. 4

FILE: P:_PWD\SJRA\60592253 – Well Rehab GST No. 2, WP 4\900 CAD, GIS\910-CAD\20-SHEETS\PROCESS\02X101.dwg LAYOUT: 01X101 DATE: 6/27/2019 3:21:54 PM BY: GARNERJ

Date: Jun 27, 2019 – 3:21pm User: garnerj File: P:_PWD\SJRA\60592253 – Well Rehab GST No. 2, WP 4\900 CAD, GIS\910-CAD\20-SHEETS\PROCESS\02X101.dwg

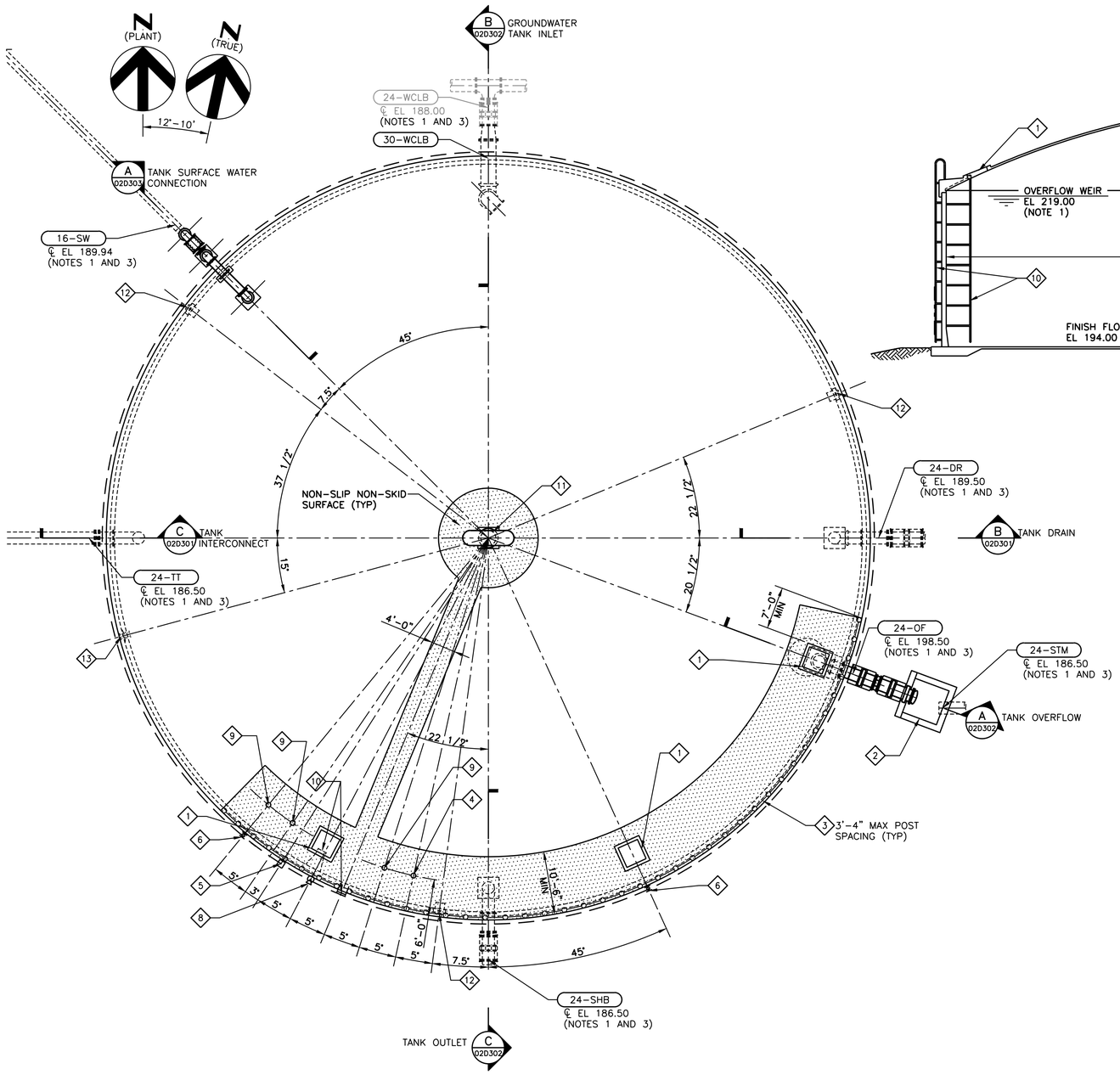

PLAN

N.T.S.

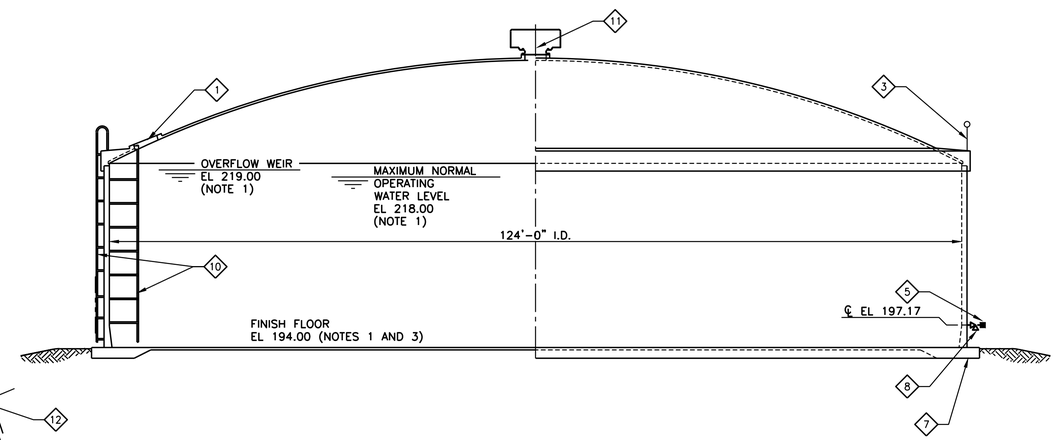

TANK SECTIONAL ELEVATION

NTS

KEY/NOTES

X DETAIL DESIGNATION

1	1 / 02D501 TYPICAL ROOF HATCH	6	2 / 02D502 SPARE WALL NOZZLE	11	2 / 02D501 ROOF VENT
2	1 / 02D301 SPLASH BOX	7	2 / 00S501 TANK FOUNDATION SCHEMATIC	12	2 / 02D503 WALL MANWAY
3	2 / 02D302 TYPICAL HANDRAIL	8	3 / 02D502 SAMPLE FAUCET	13	4 / 02D502 AERATION SUCTION PIPING NOZZLE
4	1 / 02D502 SPARE ROOF NOZZLE	9	2 / 00E502 RADAR LEVEL SENSOR INSTALLATION ON GST ROOF		
5	1 / 00E502 FLANGED LEVEL GAUGE	10	1 / 02D503 INSIDE AND OUTSIDE LADDERS		

NOTES:

1. PRIOR TO CONSTRUCTION CONTRACTOR SHALL VERIFY SURFACE WATER INLET, OVERFLOW WEIR, AND FINISHED FLOOR ELEVATIONS OF THE PROPOSED TANK ARE EQUAL TO THOSE OF THE EXISTING TANK. RESULTS OF SURVEY OF BOTH EXISTING AND PROPOSED TANKS SHALL BE PROVIDED TO THE OWNER.
2. THE TANK MANUFACTURER SHALL PROVIDE CONDUIT SUPPORT PADS WITH CLAMPS PER NOTE 1 ON SHEET 02E101.
3. CONTRACTOR SHALL CONFIRM ALL ELEVATIONS ON THIS SHEET INCLUDING EXCAVATION AND TO FIELD LOCATE TIE-IN CONNECTIONS TO ALL EXISTING PIPELINES ADJACENT TO NEW TANK. RESULTS OF SURVEY SHALL BE PROVIDED TO OWNER AHEAD OF TANK SHOP DRAWINGS.
4. CONTRACTOR TO VERIFY THAT TANK INDICATOR IS AT SAME ELEVATION AS GST-1.
5. IN ACCORDANCE WITH 30 TAC §290.43(C), THE ROOF OF THE TANK SHALL BE DESIGNED AND ERECTED SO THAT NO WATER PONDS AT ANY POINT ON THE ROOF AND, IN ADDITION, NO AREA OF THE ROOF SHALL HAVE A SLOPE OF LESS THAN 0.75 INCH PER FOOT.

TANK FOUNDATION NOTES:

1. TANK FOUNDATION, INCLUDING EXCAVATION AND FILL SHALL BE CONSTRUCTED IN ACCORDANCE WITH TANK FOUNDATION SCHEMATIC DETAIL "2" ON SHEET 00S501, AND THE PROJECT SPECIFIC GEOTECHNICAL REPORT PROVIDED TO THE BIDDER/CONTRACTOR PRIOR TO PROJECT'S PUBLIC BID.
2. SHOULD THE CONTRACTOR DETERMINE THAT THE AVAILABLE GEOTECHNICAL INFORMATION IS INSUFFICIENT AND ADDITIONAL TECHNICAL INFORMATION IS NECESSARY, THE CONTRACTOR SHALL OBTAIN SUCH INFORMATION AT HIS OWN COST.

LEGEND:

EXISTING (LIGHT LINE WORK)

PROPOSED (DARK LINE WORK)

AECOM
AECOM TECHNICAL SERVICES, INC.
19219 KATY FREEWAY, SUITE 100
HOUSTON, TEXAS 77094
WWW.AECOM.COM
TBPE REG. NO. F-3580

AECOM Project No.: 60592253

STATE OF TEXAS
XUAN ZHENG
127444
LICENSED PROFESSIONAL ENGINEER
Xuan Zheng
06/28/2019

SAN JACINTO RIVER AUTHORITY
THE WOODLANDS DIVISION

GROUND STORAGE TANK NO. 2 AT WATER PLANT NO. 4

ISSUE	DATE	DESCRIPTION
0	06/28/2019	ISSUED FOR CONSTRUCTION

SJRA PROJECT NO: WDPR 0098.1001.2G002
FILE NAME: 02D101.dwg
DRAWN BY: J GARNER
CHECKED BY: K ZHENG
SCALE: NONE

PROCESS

GROUND STORAGE TANK NO. 2 PLAN AND SECTION

SHEET 02D101
SEQ. 21 OF 45

AGENCY REVIEW SUBMITTAL GST NO. 2 AT WP NO. 4

FILE: P:_PWD\SJRA\60592253 - Well Rehab GST No. 2, WP 4\900 CAD, GIS\910-CAD\20-SHEETS\PROCESS\02D101.dwg LAYOUT: 02D101 DATE: 6/27/2019 3:22:07 PM BY: GARNERJ

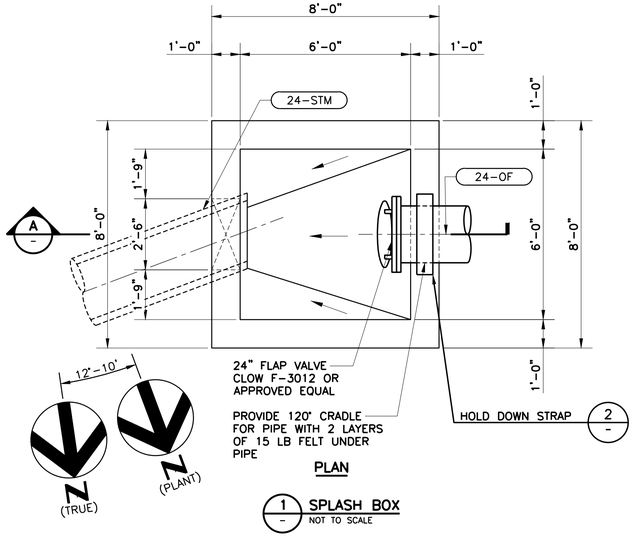

PLAN

1 SPLASH BOX
NOT TO SCALE

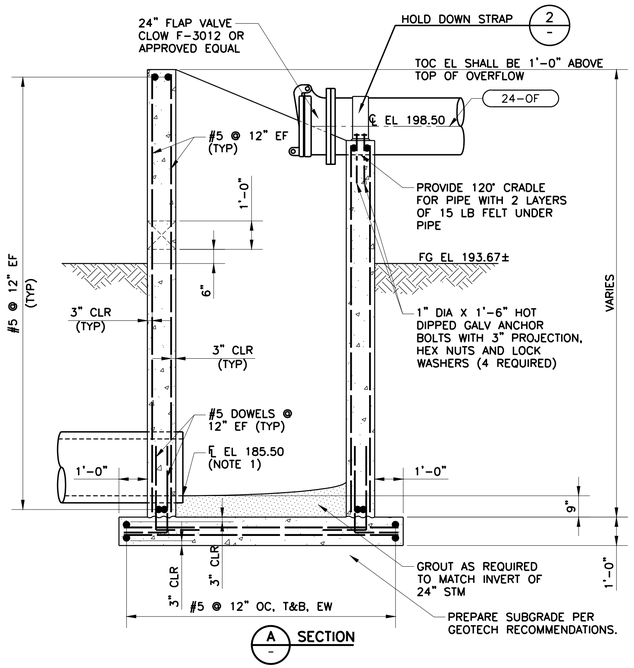

A SECTION

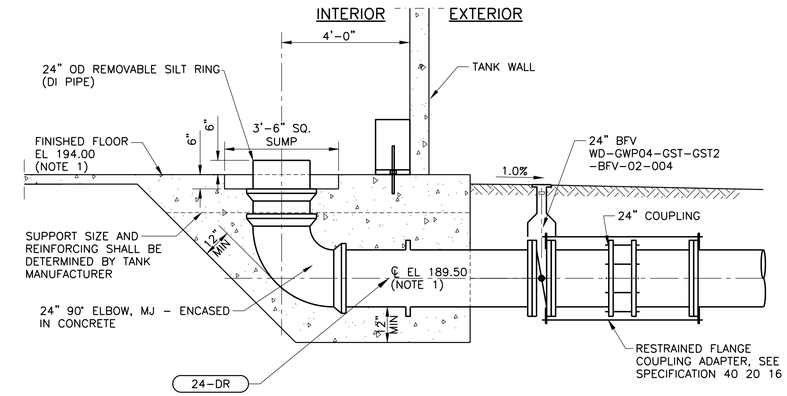

B TANK DRAIN SECTION
NOT TO SCALE

NOTES:

1. REFER TO NOTES 1 AND 3 ON SHEET 02D101.

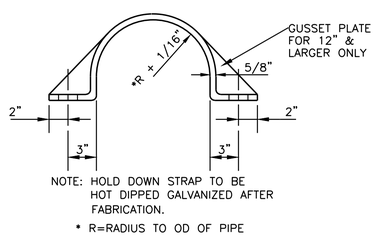

NOTE: HOLD DOWN STRAP TO BE HOT DIPPED GALVANIZED AFTER FABRICATION.

* R=RADIUS TO OD OF PIPE

ELEVATION

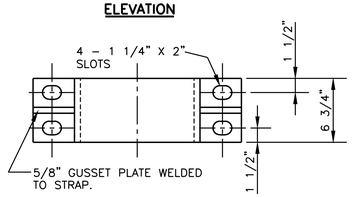

PLAN - 12" DIA. PIPE AND LARGER

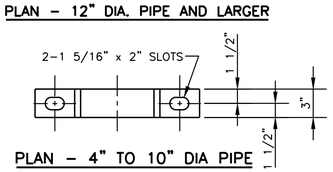

PLAN - 4" TO 10" DIA PIPE

2 HOLD DOWN STRAP
NOT TO SCALE

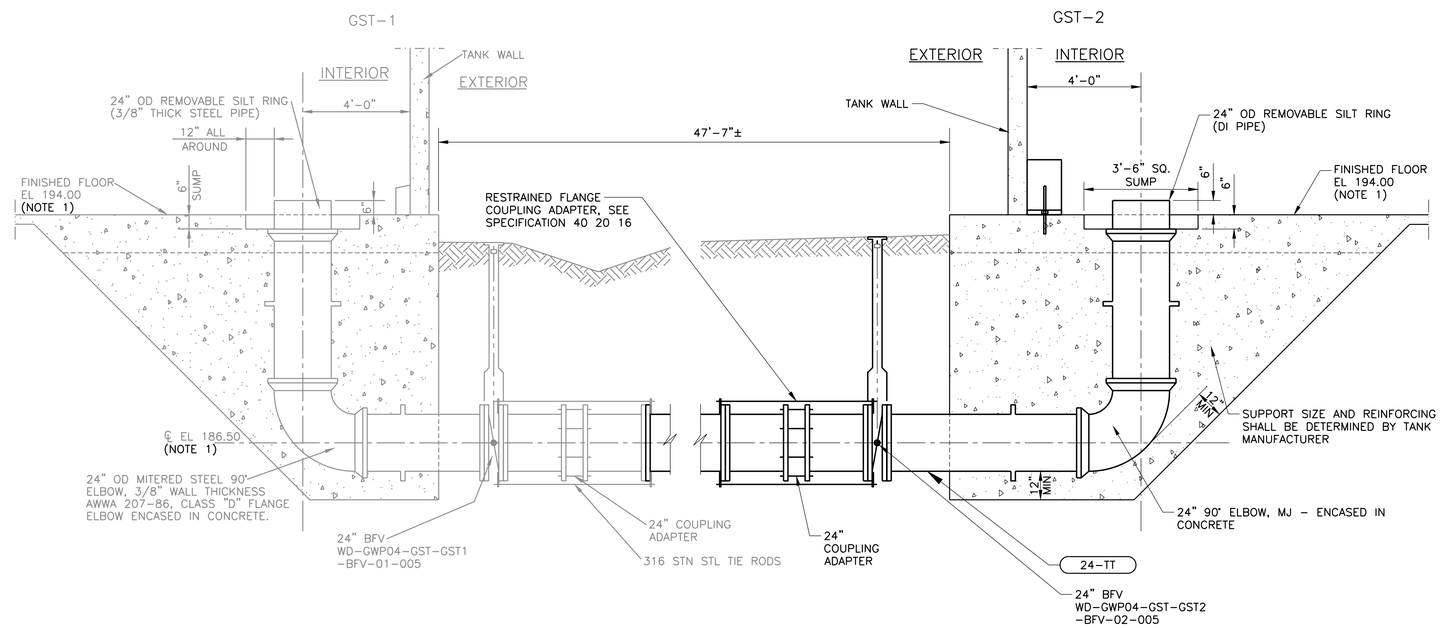

C TANK INTERCONNECT SECTION
NOT TO SCALE

LEGEND:

EXISTING (LIGHT LINE WORK)

PROPOSED (DARK LINE WORK)

AECOM
AECOM TECHNICAL SERVICES, INC.
19219 KATY FREEWAY, SUITE 100
HOUSTON, TEXAS 77094
WWW.AECOM.COM
TBPE REG. NO. F-3580

AECOM Project No.: 60592253

STATE OF TEXAS
XUAN ZHENG
127444
LICENSED
PROFESSIONAL ENGINEER
Xuan Zheng
06/28/2019

SAN JACINTO RIVER AUTHORITY
THE WOODLANDS DIVISION

SAN JACINTO RIVER AUTHORITY
SJRA
www.SJRA.net

GROUND STORAGE TANK
NO. 2 AT WATER PLANT
NO. 4

ISSUE	DATE	DESCRIPTION
0	06/28/2019	ISSUED FOR CONSTRUCTION

SJRA PROJECT NO: WDPR 0098.1001.2G002
FILE NAME: 02D301.dwg
DRAWN BY: J GARNER
CHECKED BY: K ZHENG
SCALE: NONE

PROCESS

GROUND STORAGE TANK NO. 2 SECTIONS 1

SHEET 02D301
SEQ. 22 OF 45

AGENCY REVIEW SUBMITTAL GST NO. 2 AT WP NO. 4

FILE: P:_PWD\SJRA\60592253 - Well Rehab GST No. 2, WP 4\900 CAD, GIS\910-CAD\20-SHEETS\PROCESS\02D301.dwg LAYOUT: 02D301 DATE: 6/27/2019 3:22:20 PM BY: GARNERJ

Date: Jun 27, 2019 - 3:22pm User: garnerj File: P:_PWD\SJRA\60592253 - Well Rehab GST No. 2, WP 4\900 CAD, GIS\910-CAD\20-SHEETS\PROCESS\02D301.dwg

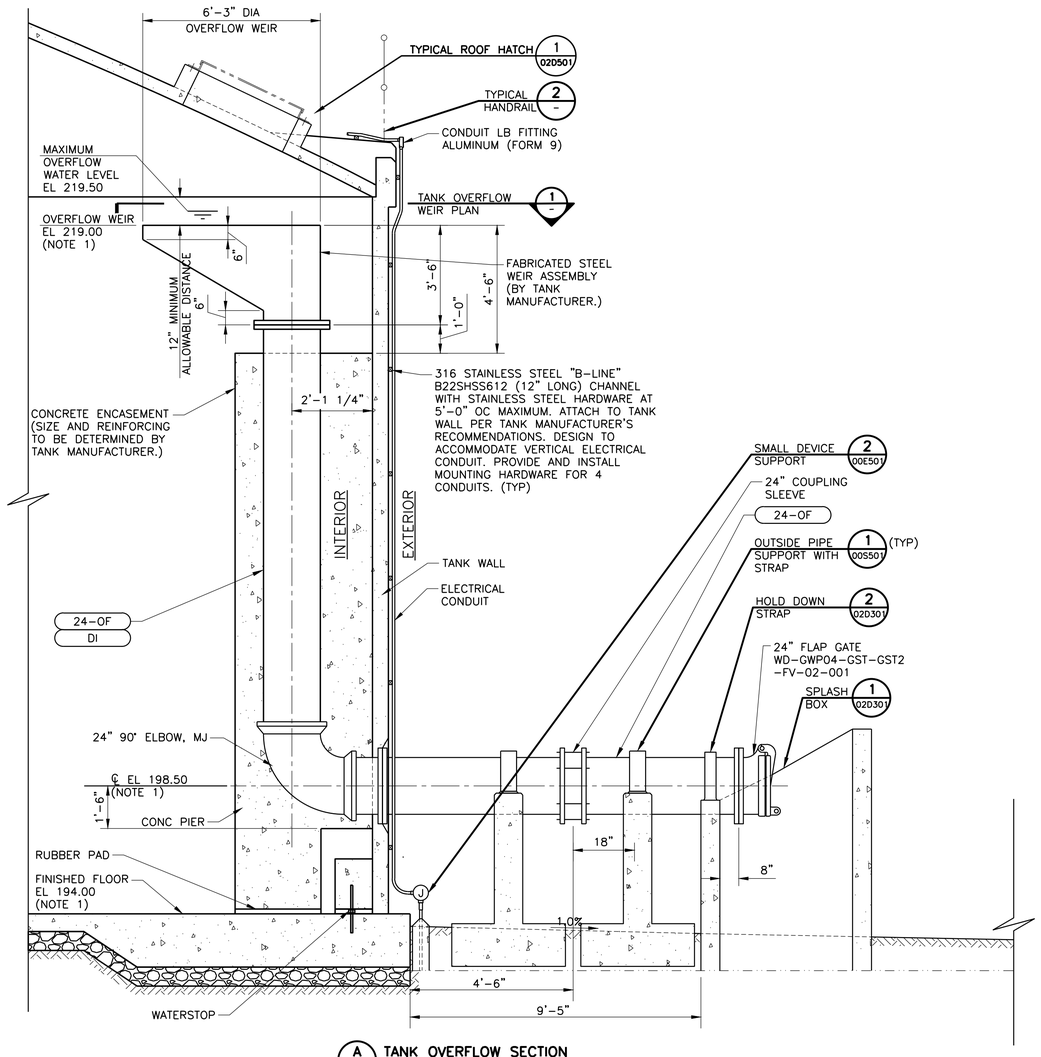

A TANK OVERFLOW SECTION
NOT TO SCALE

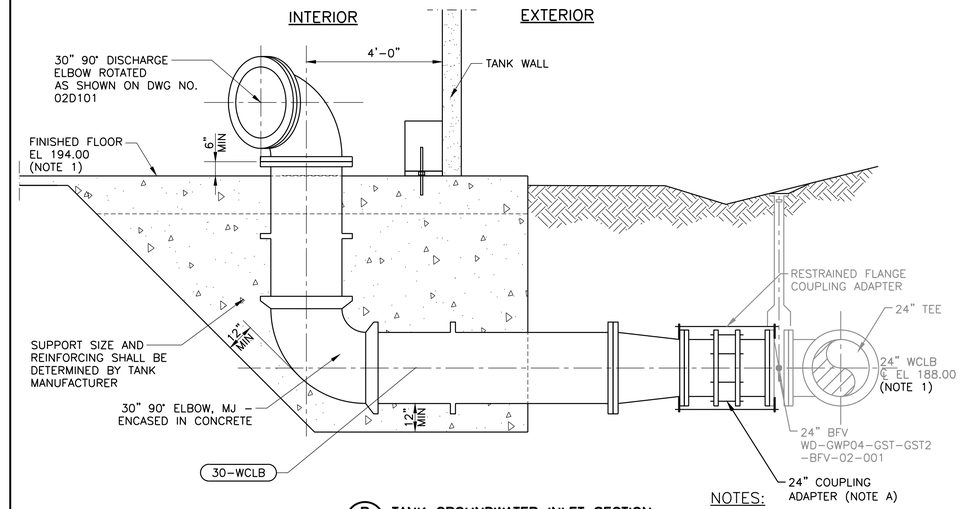

B TANK GROUNDWATER INLET SECTION
NOT TO SCALE

NOTES:

A. ROMAC 400RG RESTRAINED FLANGE COUPLING ADAPTOR OR EQUAL, MUST HAVE MIN. 3" ALLOWABLE DEFLECTION.

NOTES:

1. REFER TO NOTES 1 AND 3 ON SHEET 02D101.

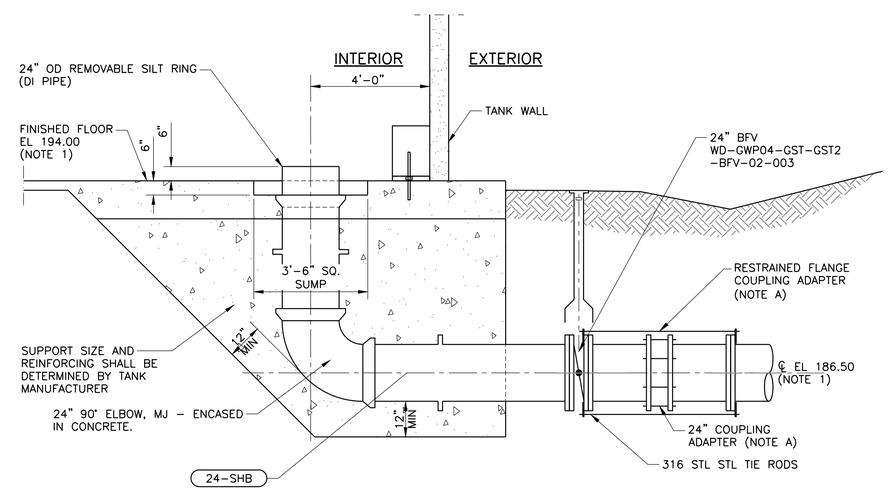

C TANK OUTLET SECTION
NOT TO SCALE

NOTES:

A. ROMAC 400RG RESTRAINED FLANGE COUPLING ADAPTOR OR EQUAL, MUST HAVE MIN. 3" ALLOWABLE DEFLECTION.

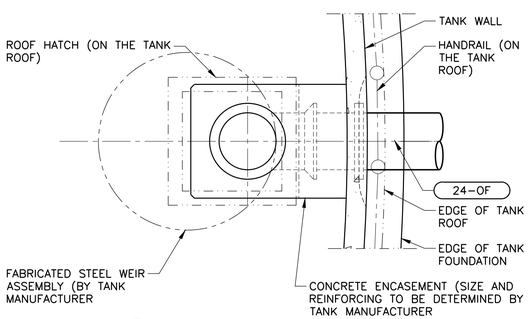

1 TANK OVERFLOW WEIR PLAN
NOT TO SCALE

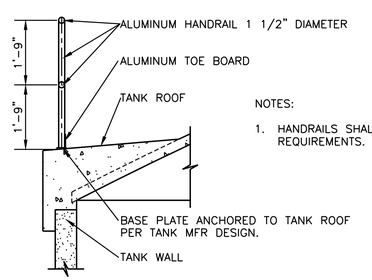

NOTES:

1. HANDRAILS SHALL MEET OSHA REQUIREMENTS.

2 TYPICAL HANDRAIL
NOT TO SCALE

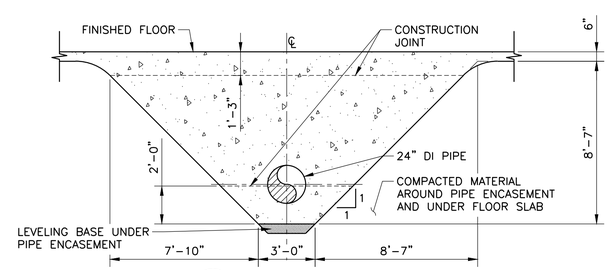

3 UNDERSLAB ENCASEMENT
SCALE: 1/4" = 1'-0"

LEGEND:

EXISTING (LIGHT LINE WORK)

PROPOSED (DARK LINE WORK)

AECOM

AECOM TECHNICAL SERVICES, INC.
19219 KATY FREEWAY, SUITE 100
HOUSTON, TEXAS 77094
WWW.AECOM.COM
TBPE REG. NO. F-3580

AECOM Project No.: 60592253

STATE OF TEXAS
XUAN ZHENG
127444
LICENSED PROFESSIONAL ENGINEER
06/28/2019

SAN JACINTO RIVER AUTHORITY
THE WOODLANDS DIVISION

GROUND STORAGE TANK NO. 2 AT WATER PLANT NO. 4

ISSUE	DATE	DESCRIPTION
0	06/28/2019	ISSUED FOR CONSTRUCTION

SJRA PROJECT NO: WDPR 0098.1001.2G002
FILE NAME: 02D302.dwg
DRAWN BY: J GARNER
CHECKED BY: K ZHENG
SCALE: AS NOTED

PROCESS

GROUND STORAGE TANK NO. 2 SECTIONS 2

SHEET 02D302
SEQ. 23 OF 45

AGENCY REVIEW SUBMITTAL GST NO. 2 AT WP NO. 4

FILE: P:_PWD\SJRA\60592253 – Well Rehab GST No. 2, WP 4\900 CAD, GIS\910-CAD\20-SHEETS\PROCESS\02D302.dwg LAYOUT: 02D302 DATE: 6/27/2019 3:22:33 PM BY: GARNERJ

Date: Jun 27, 2019 – 3:22pm User: garnerj File: P:_PWD\SJRA\60592253 – Well Rehab GST No. 2, WP 4\900 CAD, GIS\910-CAD\20-SHEETS\PROCESS\02D302.dwg

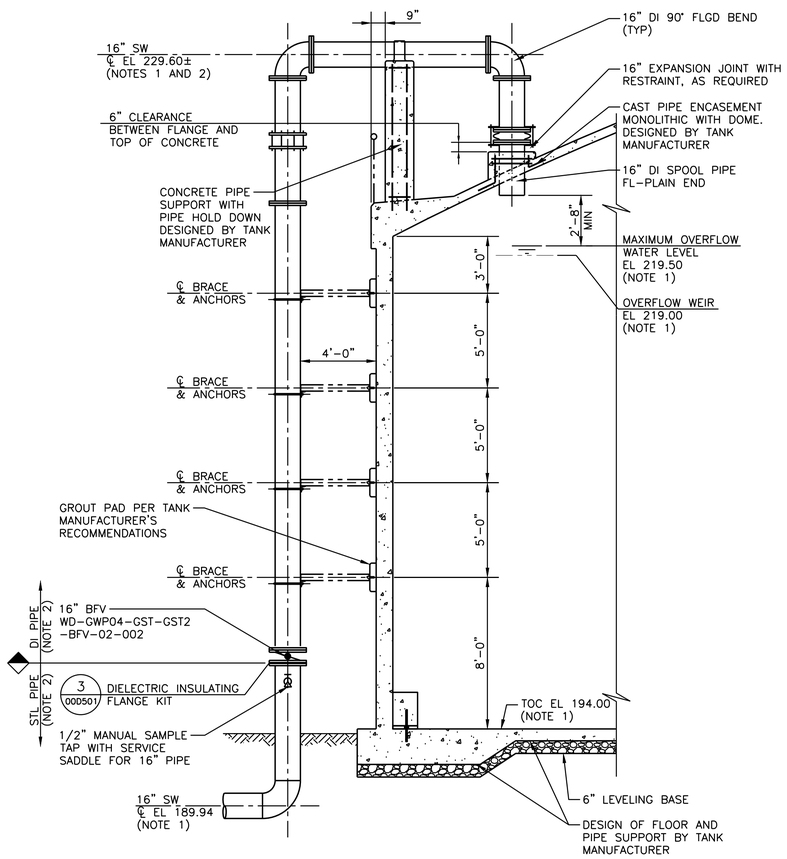

A
-
TANK SURFACE WATER CONNECTION SECTION
NOT TO SCALE
(NOTE 3)

NOTES:

1. REFER TO NOTES 1 AND 3 ON SHEET 02D101.
2. CONTRACTOR IS TO VERIFY DIMENSIONS AND ELEVATIONS BEFORE PIPE FABRICATION.
3. TANK SURFACE WATER CONNECTION NOTES:
   A. REMOVE BLIND FLANGE AND CONNECT TO EXISTING SURFACE WATER LINE.
   B. USE DIELECTRIC INSULATION FLANGE KIT 3/00D501 IF DISSIMILAR METALS ARE USED.

AGENCY REVIEW SUBMITTAL GST NO. 2 AT WP NO. 4

AECOM
AECOM TECHNICAL SERVICES, INC.
19219 KATY FREEWAY, SUITE 100
HOUSTON, TEXAS 77094
WWW.AECOM.COM
TBPE REG. NO. F-3580

AECOM Project No.: 60592253

STATE OF TEXAS
XUAN ZHENG
127444
LICENSED
PROFESSIONAL ENGINEER
Xuan Zheng
06/28/2019

SAN JACINTO RIVER AUTHORITY
THE WOODLANDS DIVISION

SAN JACINTO RIVER AUTHORITY
SJRA
www.SJRA.net

GROUND STORAGE TANK NO. 2 AT WATER PLANT NO. 4

ISSUE	DATE	DESCRIPTION
0	06/28/2019	ISSUED FOR CONSTRUCTION

SJRA PROJECT NO: WDPR 0098.1001.2G002
FILE NAME: 02D303.dwg
DRAWN BY: J GARNER
CHECKED BY: K ZHENG
SCALE: AS NOTED

PROCESS

GROUND STORAGE TANK
NO. 2 SECTIONS 3

SHEET 02D303
SEQ. 24 OF 45

FILE: P:_PWD\SJRA\60592253 - Well Rehab GST No. 2, WP 4\900 CAD, GIS\910-CAD\20-SHEETS\PROCESS\02D303.dwg LAYOUT: 02D303 DATE: 6/27/2019 3:22:48 PM BY: GARNERJ

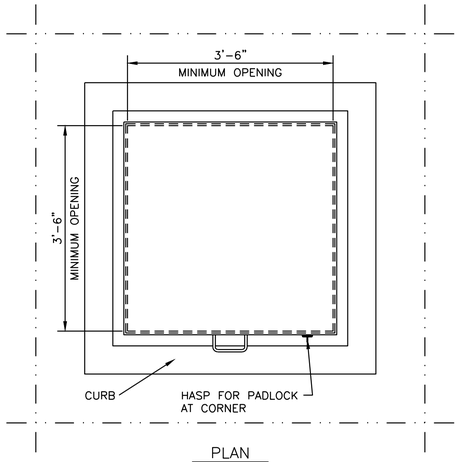

PLAN

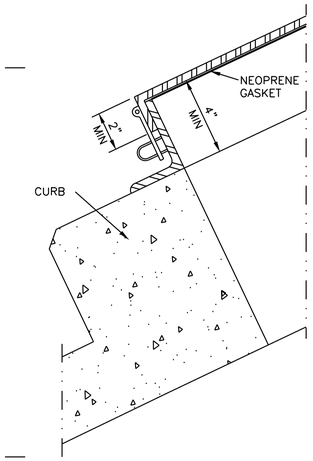

SECTION THRU HASP

NOTE:

CONDUIT SLEEVE PENETRATION FOR THE 1" ALUMINUM CONDUIT THROUGH TANK HATCH CONCRETE CURB AS PER TANK MANUFACTURER'S RECOMMENDATIONS, REFER TO DRAWING 02E101 FOR LOCATION.

1 / - TYPICAL ROOF HATCH
NOT TO SCALE

NOTES:

1. ROOF VENT FABRICATION REQUIREMENTS:
   A. SIZE EACH VENT FOR A MAXIMUM DISCHARGE RATE OF 1,000 CFM AND MAXIMUM INTAKE RATE OF 1,500 CFM. MAXIMUM PRESSURE DROP OF 0.5" WG ACROSS VENT ALLOWED.
   B. VENT TO BE FABRICATED FROM 316 STAINLESS STEEL.
   C. SCREEN TO BE #16 MESH 316 STAINLESS STEEL SCREEN WITH 0.018" WIRE AND 0.0445" OPENING WITH 50% OPEN AREA. ATTACH VENT FLANGES WITH (23) 5/8" DIAMETER STAINLESS STEEL BOLTS, NUTS AND WASHERS.
   D. VENT TO BE VANDAL RESISTANT. MINIMUM VENT DIAMETER SHALL BE 24".

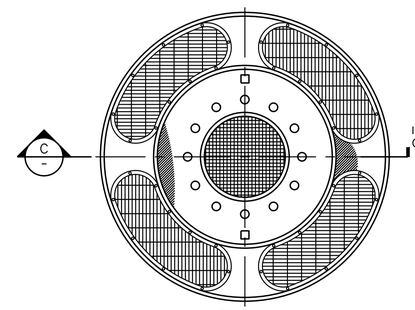

PLAN

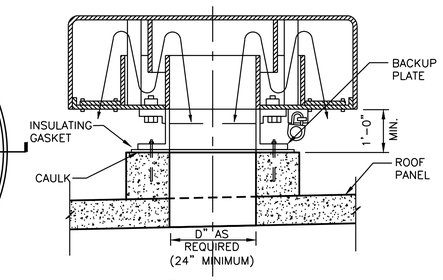

C / - SECTION
NOT TO SCALE

2 / - ROOF VENT
NOT TO SCALE

AECOM
AECOM TECHNICAL SERVICES, INC.
19219 KATY FREEWAY, SUITE 100
HOUSTON, TEXAS 77094
WWW.AECOM.COM
TBPE REG. NO. F-3580

AECOM Project No.: 60592253

STATE OF TEXAS
XUAN ZHENG
127444
LICENSED
PROFESSIONAL ENGINEER
Xuan Zheng
06/28/2019

SAN JACINTO RIVER AUTHORITY
THE WOODLANDS DIVISION

SAN JACINTO RIVER AUTHORITY
SJRA
www.SJRA.net

GROUND STORAGE TANK NO. 2 AT WATER PLANT NO. 4

ISSUE	DATE	DESCRIPTION
0	06/28/2019	ISSUED FOR CONSTRUCTION

SJRA PROJECT NO: WDPR 0098.1001.2G002
FILE NAME: 02D501.dwg
DRAWN BY: J GARNER
CHECKED BY: K ZHENG
SCALE: NONE

PROCESS

GROUND STORAGE TANK NO. 2 DETAILS 1

SHEET 02D501
SEQ. 25 OF 45

AGENCY REVIEW SUBMITTAL GST NO. 2 AT WP NO. 4

FILE: P:_PWD\SJRA\60592253 - Well Rehab GST No. 2, WP 4\900 CAD, GIS\910-CAD\20-SHEETS\PROCESS\02D501.dwg LAYOUT: 02D501 DATE: 6/27/2019 3:23:01 PM BY: GARNERJ

Date: Jun 27, 2019 - 3:23pm User: garnerj File: P:_PWD\SJRA\60592253 - Well Rehab GST No. 2, WP 4\900 CAD, GIS\910-CAD\20-SHEETS\PROCESS\02D501.dwg

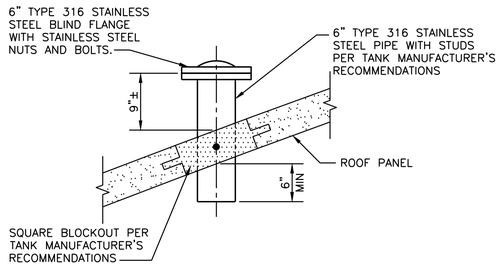

1 SPARE ROOF NOZZLE
NOT TO SCALE

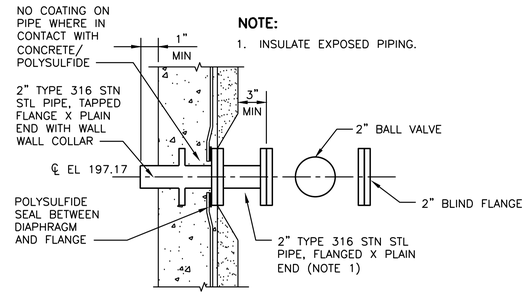

NOTE:
1. INSULATE EXPOSED PIPING.

2 SPARE WALL NOZZLE
NOT TO SCALE

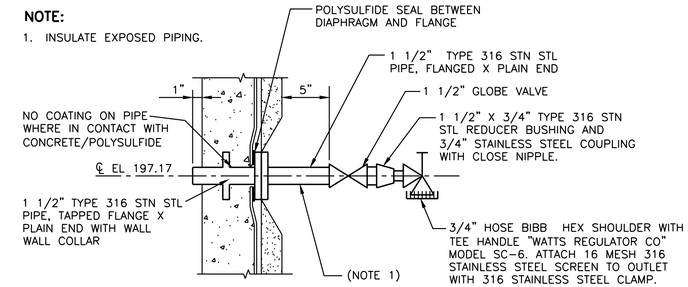

NOTE:
1. INSULATE EXPOSED PIPING.

3 SAMPLE FAUCET
NOT TO SCALE

NOTE:
1. INSULATE EXPOSED PIPING.

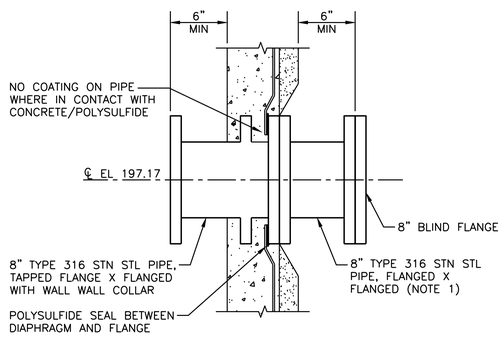

4 AERATION SUCTION PIPING NOZZLE
NOT TO SCALE

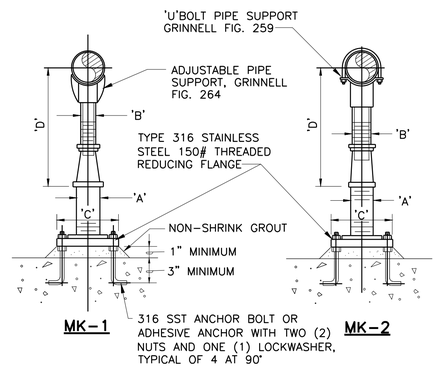

5 ADJUSTABLE STANCHION
NOT TO SCALE

ADJUSTABLE PIPE SUPPORT APPROXIMATE DIMENSIONS IN INCHES					
PIPE SIZE	'A'	'B'	'C'	'D' MINIMUM	'D' MAXIMUM
4	3	* 2-1/2	9	10-1/4	14
6	3	* 2-1/2	9	11-5/8	15-1/4
8	3	* 2-1/2	9	13-5/8	16-1/2
10	3	* 2-1/2	9	14-5/8	18-1/4
12	3	* 2-1/2	9	15-5/8	19-3/4
14	4	3	11	18-7/8	20-3/4
16	4	3	11	19-7/8	22-1/4
18	6	3-1/2	13-1/2	21-1/4	24
20	6	3-1/2	13-1/2	23-1/4	25-1/2
24	6	4	13-1/2	26-1/2	28-1/4
30	6	4	13-1/2	29-5/8	31-1/2
36	6	4	13-1/2	32-5/8	34-3/4

* SEE MFR.

NOTES:
1. ALL PARTS TO BE TYPE 316 STAINLESS STEEL.
2. USE FOR PIPE LOCATED LESS THAN 3 FT FROM FLOOR, UNLESS NOTED OTHERWISE.
3. PROVIDE MK-2 FOR PIPE 6 IN AND LARGER.

AECOM
AECOM TECHNICAL SERVICES, INC.
19219 KATY FREEWAY, SUITE 100
HOUSTON, TEXAS 77094
WWW.AECOM.COM
TBPE REG. NO. F-3580

AECOM Project No.: 60592253

STATE OF TEXAS
XUAN ZHENG
127444
LICENSED PROFESSIONAL ENGINEER
06/28/2019

SAN JACINTO RIVER AUTHORITY
THE WOODLANDS DIVISION

SAN JACINTO RIVER AUTHORITY
SJRA
www.SJRA.net

GROUND STORAGE TANK NO. 2 AT WATER PLANT NO. 4

ISSUE	DATE	DESCRIPTION
0	06/28/2019	ISSUED FOR CONSTRUCTION

SJRA PROJECT NO: WDPR 0098.1001.2G002
FILE NAME: 02D502.dwg
DRAWN BY: J GARNER
CHECKED BY: K ZHENG
SCALE: AS NOTED

PROCESS

GROUND STORAGE TANK NO. 2 DETAILS 2

SHEET 02D502
SEQ. 26 OF 45

AGENCY REVIEW SUBMITTAL GST NO. 2 AT WP NO. 4

FILE: P:_PWD\SJRA\60592253 - Well Rehab GST No. 2, WP 4\900 CAD, GIS\910-CAD\20-SHEETS\PROCESS\02D502.dwg LAYOUT: 02D502 DATE: 6/27/2019 3:23:14 PM BY: GARNERJ

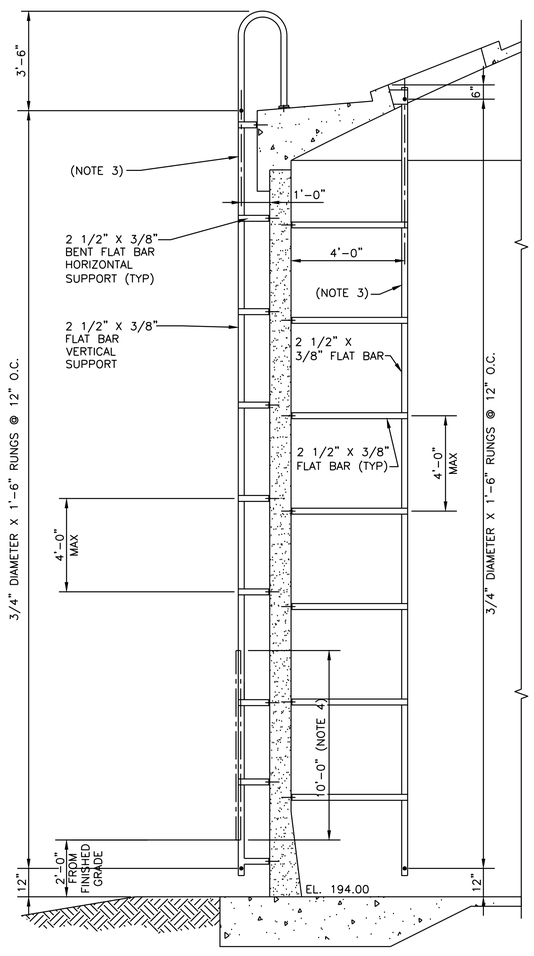

A SECTION
NOT TO SCALE

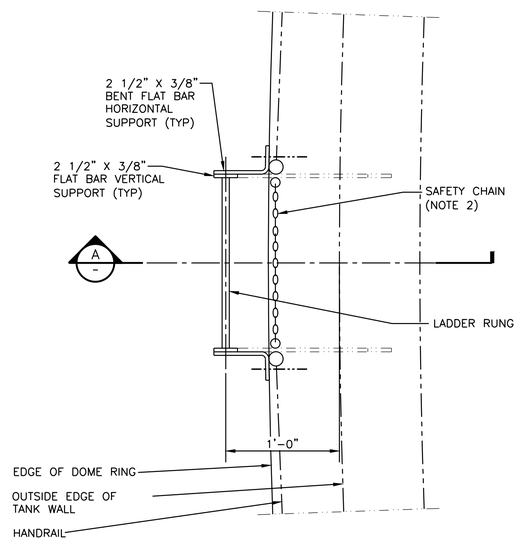

PLAN

1 INSIDE AND OUTSIDE LADDERS
NOT TO SCALE

NOTES:

1. LADDER, INTERIOR AND EXTERIOR, AND SAFETY DEVICE TO BE OSHA APPROVED RIGID RAIL SYSTEM. PROVIDE 2 BELT ASSEMBLIES, COMPLETE WITH ALL ACCESSORIES. FOR INSIDE LADDER PROVIDE REMOVABLE EXTENSIONS THAT EXTEND CENTER ROD 3'-6" ALLOWING CENTER ROD TO EXTEND ABOVE ROOF OPENING.
2. ALL PLATFORM OPENINGS LEADING TO LADDERS SHALL HAVE 1/4" DIAMETER GALVANIZED COILED CHAIN WITH SWIVEL SNAP AT ONE END, OR SAFETY GATE SUITABLE TO PROTECT / SECURE OPENING.
3. EXTERIOR AND INTERIOR LADDERS SHALL BE FABRICATED USING 316 STAINLESS STEEL.
4. BOTTOM 10 FEET OF EXTERIOR LADDER SHALL BE COVERED WITH 316 STAINLESS STEEL SHEET METAL LADDER GUARD.

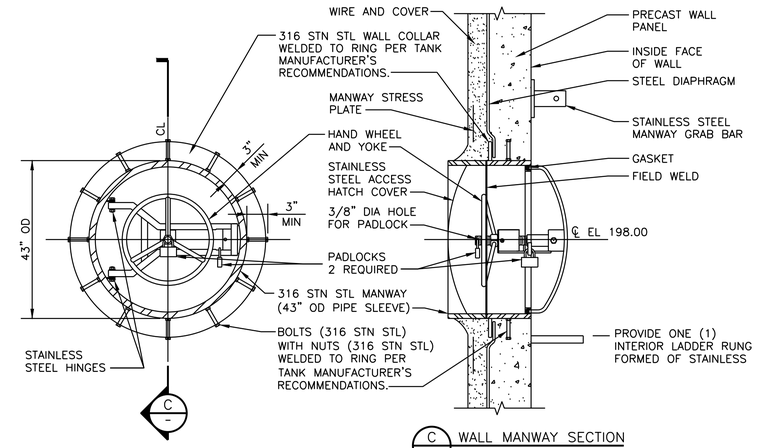

ELEVATION

C WALL MANWAY SECTION
NOT TO SCALE

2 WALL MANWAY
NOT TO SCALE

AECOM

AECOM TECHNICAL SERVICES, INC.
19219 KATY FREEWAY, SUITE 100
HOUSTON, TEXAS 77094
WWW.AECOM.COM
TBPE REG. NO. F-3580

AECOM Project No.: 60592253

STATE OF TEXAS
XUAN ZHENG
127444
LICENSED PROFESSIONAL ENGINEER
Xuan Zheng
06/28/2019

SAN JACINTO RIVER AUTHORITY
THE WOODLANDS DIVISION

SAN JACINTO RIVER AUTHORITY
SJRA
www.SJRA.net

GROUND STORAGE TANK NO. 2 AT WATER PLANT NO. 4

ISSUE	DATE	DESCRIPTION
0	06/28/2019	ISSUED FOR CONSTRUCTION

SJRA PROJECT NO: WDPR 0098.1001.2G002
FILE NAME: 02D503.dwg
DRAWN BY: J GARNER
CHECKED BY: K ZHENG
SCALE: AS NOTED

PROCESS

GROUND STORAGE TANK NO. 2 DETAILS 3

SHEET 02D503
SEQ. 27 OF 45

AGENCY REVIEW SUBMITTAL GST NO. 2 AT WP NO. 4

FILE: P:_PWD\SJRA\60592253 - Well Rehab GST No. 2, WP 4\900 CAD, GIS\910-CAD\20-SHEETS\PROCESS\02D503.dwg LAYOUT: 02D503 DATE: 6/27/2019 3:23:26 PM BY: GARNERJ

X 20A 3P OR X 100AF 80AT 3P — LOW – VOLTAGE CIRCUIT BREAKER (CB). RATINGS AND NO. OF POLES AS SHOWN. WHEN SPECIFIC TYPE IS REQUIRED, X INDICATES TYPE.

TYPES:
MCCB – MOLDED CASE
ICCB – INSULATED CASE
LVP – LOW – VOLTAGE POWER
MCP – MOTOR CIRCUIT PROTECTOR (RATING PER CONNECTED LOAD)

CB — SEPARATELY MOUNTED CIRCUIT BREAKER; SEE ELECTRICAL ONE – LINE DIAGRAM OR SCHEDULE FOR DESCRIPTION

GFP — GROUND FAULT PROTECTION

52 — MEDIUM – VOLTAGE CIRCUIT BREAKER

FUSE, SIZE, AND NUMBER OF FUSES AS NOTED

FUSED CUTOUT, CURRENT RATING, FUSE SIZE, AND NUMBER OF POLES AS NOTED

FUSIBLE SWITCH, CURRENT RATING, FUSE SIZE, AND QUANTITY AS NOTED

NON–FUSED SWITCH, CURRENT RATING, AND NUMBER OF POLES AS NOTED

DISCONNECT OR DRAWOUT CONNECTION

A B & A B — MAGNETIC MOTOR STARTER AND SEPARATELY MOUNTED COMBINATION MAGNETIC MOTOR STARTER

D & D — MOTOR CONTROLLER AND SEPARATELY MOUNTED MOTOR CONTROLLER WITH SHORT CIRCUIT PROTECTION AND DISCONNECT

MOTOR STARTER AND CONTROLLER SUBSCRIPTS:

A – MAGNETIC STARTER NEMA SIZE

B – STARTER TYPE
NONE – FULL VOLTAGE NON–REVERSING (FVNR)
FVR – FULL VOLTAGE REVERSING
2S – TWO SPEED
RVAT – REDUCED VOLTAGE AUTO TRANSFORMER

C – CONTROL DIAGRAM OR CONTROLS SCHEDULE NUMBER (IF REQUIRED)

D – CONTROLLER TYPE
VFD – VARIABLE FREQUENCY DRIVE
SS – SOLID STATE
SSRV – SOLID STATE REDUCED VOLTAGE

SEPARATELY MOUNTED COMBINATION MOTOR STARTER OR CONTROLLER; SEE ELECTRICAL ONE – LINE DIAGRAM OR SCHEDULE FOR DESCRIPTION

THERMAL OVERLOAD ELEMENT

OL — THERMAL OVERLOAD RELAY CONTACT

OR — DISCONNECT OR SAFETY SWITCH, 30A, 3P, NON–FUSED UNLESS OTHERWISE NOTED

DISCONNECT OR SAFETY SWITCH WITH AUXILIARY CONTACTS, 30A, 3P, NON–FUSED UNLESS OTHERWISE NOTED

7 1/2 OR HP — MOTOR WITH DESIGN HORSEPOWER (WHEN INDICATED)

M — MOTOR

GENERATOR

ATS — TRANSFER SWITCH, CURRENT RATING, AND NUMBER OF POLES AS NOTED

ATS – AUTOMATIC
MTS – MANUAL

TRANSFORMER

Δ 3–PHASE, 3–WIRE DELTA CONNECTION

Y 3–PHASE, 4–WIRE GROUNDED WYE CONNECTION

LP100 208/120V 3Ø, 4W — SWITCHBOARD OR PANELBOARD; NAME, VOLTAGE, PHASE, NUMBER OF WIRES WHEN INDICATED

100 KVA — NON–MOTOR LOAD WITH DESIGN KVA, KW, OR AMP

CPT — CONTROL POWER TRANSFORMER (CPT)

VOLTAGE TRANSFORMER (VT OR PT)

CURRENT TRANSFORMER (CT)

WH — UTILITY WATT–HOUR METER PER UTILITY REQUIREMENTS

DMP — DIGITAL METERING PACKAGE

RTM — RUN TIME METER

GROUND

LIGHTNING ARRESTER

SPD — LOW VOLTAGE SURGE PROTECTIVE DEVICE

ELECTRICAL CONNECTION

OR — NO ELECTRICAL CONNECTION

SV OR — SOLENOID VALVE

X Y — CONTROL/RELAY COIL; X INDICATES TYPE, Y INDICATES LOOP NO. WHEN USED

TYPES:
CR – CONTROL RELAY
DP – DEFINITE PURPOSE RELAY
LC – LIGHTING CONTACTOR
M – MOTOR STARTER
PC – PHOTO CELL
TC – TIME CLOCK
TR – TIMING RELAY

NORMALLY OPEN CONTACT (N.O.)

NORMALLY CLOSED CONTACT (N.C.)

NORMALLY OPEN TIME DELAY RELAY CONTACT WITH TIME DELAY ON CLOSING AFTER COIL IS ENERGIZED

NORMALLY CLOSED TIME DELAY RELAY CONTACT WITH TIME DELAY ON OPENING AFTER COIL IS ENERGIZED

NORMALLY OPEN TIME DELAY RELAY CONTACT WITH TIME DELAY ON OPENING AFTER COIL IS DE–ENERGIZED

NORMALLY CLOSED TIME DELAY RELAY CONTACT WITH TIME DELAY ON CLOSING AFTER COIL IS DE–ENERGIZED

NORMALLY OPEN TEMPERATURE SWITCH; CLOSE ON RISING TEMPERATURE

NORMALLY CLOSED TEMPERATURE SWITCH; OPEN ON RISING TEMPERATURE

NORMALLY OPEN FLOW SWITCH; CLOSE ON INCREASING FLOW

NORMALLY CLOSED FLOW SWITCH; OPEN ON INCREASING FLOW

NORMALLY OPEN LEVEL SWITCH, CLOSE ON RISING LEVEL

NORMALLY CLOSED LEVEL SWITCH, OPEN ON RISING LEVEL

NORMALLY OPEN PRESSURE SWITCH, CLOSE ON INCREASING PRESSURE

NORMALLY CLOSED PRESSURE SWITCH, OPEN ON INCREASING PRESSURE

NORMALLY OPEN LIMIT SWITCH, CLOSE ON REACHING LIMIT

NORMALLY CLOSED LIMIT SWITCH, OPEN ON REACHING LIMIT

FIELD WIRING EXTERNAL TO CONTROL PANEL

X — INTERLOCK; X INDICATES TYPE

TYPES:
E – ELECTRICAL
M – MECHANICAL
K – KEY
I – INTERLOCK

OFF HAND AUTO XOO OOX — 3 POSITION SELECTOR SWITCH, MAINTAINED CONTACTS; UNLESS OTHERWISE NOTED, 2–POSITION SIMILAR

NORMALLY OPEN PUSHBUTTON, MOMENTARY CONTACT UNLESS OTHERWISE NOTED

NORMALLY CLOSED PUSHBUTTON, MOMENTARY CONTACT UNLESS OTHERWISE NOTED

X — INDICATING LIGHT, X INDICATES LENS COLOR

X — PUSH TO TEST INDICATING LIGHT, X INDICATES LENS COLOR

LENS COLORS:
R – RED
G – GREEN
B – BLUE
Y – YELLOW
W – WHITE
A – AMBER

T — TRANSFORMER

SS — SELECTOR SWITCH

PB — PUSHBUTTON

CS — CONTROL STATION

INSTRUMENTATION/CONTROLS CONNECTION

CONTROL PANEL INTEGRAL OR PROVIDED WITH ASSOCIATED EQUIPMENT

CONTROL PANEL WITH DISCONNECT SWITCH INTEGRAL OR PROVIDED WITH ASSOCIATED EQUIPMENT

J — JUNCTION OR PULL BOX

EQUIPMENT CONNECTION

PANELBOARD (250V TO 600V)

PANELBOARD (LESS THAN 250V)

ELECTRICAL EQUIPMENT ENCLOSURE: SWITCHBOARD, MOTOR CONTROL CENTER, CONTROL PANEL, OR OTHER EQUIPMENT AS INDICATED

PC — PHOTOCELL

OS — OCCUPANCY SENSOR – CEILING MOUNTED

OS — OCCUPANCY SENSOR – WALL MOUNTED

X Y z — CEILING/PENDANT MOUNTED LUMINAIRE – COMPACT FLUORESCENT OR LED

X Y z — WALL MOUNTED LUMINAIRE – COMPACT FLUORESCENT OR LED

X Y z — CEILING/PENDANT MOUNTED LUMINAIRE – FLUORESCENT OR LED

X Y z — WALL/SURFACE MOUNTED LUMINAIRE – FLUORESCENT OR LED

X Y z — CEILING/PENDANT MOUNTED LUMINAIRE – COMPACT FLUORESCENT OR LED (NORMAL/EMERGENCY)

X Y z — WALL MOUNTED LUMINAIRE – COMPACT FLUORESCENT OR LED (NORMAL/EMERGENCY)

X Y z — CEILING/PENDANT MOUNTED LUMINAIRE – FLUORESCENT OR LED (NORMAL/EMERGENCY)

X Y z — WALLT MOUNTED LUMINAIRE – FLUORESCENT OR LED (NORMAL/EMERGENCY)

X Y z — EMERGENCY LIGHT FIXTURE, 2 ATTACHED HEADS AS SHOWN

Y — EMERGENCY LIGHT, REMOTE MOUNTED HEAD

X Y z X Y z — DOUBLE–FACED CEILING OR WALL MOUNTED EXIT LIGHT; DIRECTIONAL ARROWS (IF REQUIRED) AS INDICATED ON PLANS

X Y z X Y z — SINGLE–FACED CEILING OR WALL MOUNTED EXIT LIGHT; DIRECTIONAL ARROWS (IF REQUIRED) AS INDICATED ON PLANS

X Y z — AREA OR ROADWAY LIGHT – POLE MOUNTED

LIGHTING FIXTURE SUBSCRIPTS:
X – INDICATES FIXTURE TYPE PER LIGHTING FIXTURE SCHEDULE
Y – INDICATES CIRCUIT NUMBER FROM PANELBOARD
z – INDICATES CONTROLLING SWITCH (IF REQUIRED)

$ Y X — TOGGLE SWITCH

SUBSCRIPTS:
X – INDICATES TYPE
NONE – SINGLE POLE
3 – THREE–WAY
4 – FOUR–WAY
M – TOGGLE SWITCH, HORSEPOWER RATED
K – KEY SWITCH
TE – MANUAL MOTOR STARTER WITH THERMAL ELEMENT
P – PILOT LIGHT
L – LIGHTED HANDLE
Y – INDICATES CONTROLLING SWITCH (IF REQUIRED)
WP – WEATHER PROOF
D – DIMMER

SPECIAL–PURPOSE RECEPTACLE AS DEFINED ON PLANS

PLUG–IN RECEPTACLE STRIP, QUANTITY AND SPACING OF RECEPTACLES AS NOTED OR SPECIFIED

TELECOMMUNICATIONS SERVICE OUTLET (VOICE/DATA)

TELECOMMUNICATIONS SERVICE OUTLET (DATA ONLY)

W — TELECOMMUNICATIONS SERVICE OUTLET (VOICE ONLY – WALL MOUNTED AT 48" A.F.F.)

X Y — QUAD–DUPLEX RECEPTACLE, TWO NEMA 5–20R UNDER COMMON COVER PLATE

X Y — DUPLEX RECEPTACLE, NEMA 5–20R

X Y — SIMPLEX RECEPTACLE, NEMA 5–20R

SUBSCRIPTS:
X – INDICATES TYPE
GFCI – GROUND FAULT CIRCUIT INTERRUPTER
Y – INDICATES CIRCUIT NUMBER FROM PANELBOARD
WP – WEATHER PROOF

SPECIAL DEVICE AND/OR CONNECTION AS NOTED

CONDUIT TURNING UP

CONDUIT TURNING DOWN

HOME RUN TO PANEL, 2 #12, 1 #12G IN 3/4"C UNLESS OTHERWISE NOTED

CIRCUIT RUN BETWEEN DEVICES EXPOSED IN NON–ARCHITECTURALLY FINISHED AREAS; CONCEALED IN ARCHITECTURALLY FINISHED AREAS. CONDUIT AND CONDUCTOR SIZES SHALL BE THE SAME AS THE HOMERUN FOR THE CIRCUIT.

CONDUIT RUN BETWEEN DEVICES CONCEALED IN NON–ARCHITECTURALLY FINISHED AREAS OR UNDER FLOOR SLAB. CONDUIT AND CONDUCTOR SIZES SHALL BE THE SAME AS THE HOMERUN FOR THE CIRCUIT.

CIRCUIT HASH MARKS (WHEN INDICATED); LONG, SHORT, SINGLE DOT, AND DOUBLE DOT REPRESENT PHASE, NEUTRAL, EQUIPMENT GROUND, AND ISOLATED EQUIPMENT GROUND, RESPECTIVELY. #12 IN 3/4" CONDUIT UNLESS OTHERWISE INDICATED.

CIRCUIT CONTINUATION

CONDUIT STUBBED OUT AND CAPPED

XX–XXXX — CONDUIT TAG OR CIRCUIT NUMBER – WIRE AND CONDUIT SIZE AS SPECIFIED IN CIRCUIT SCHEDULE ON THE SHEETS

GND — GROUNDING CONDUCTOR

E — UNDERGROUND CONCRETE ENCASED DUCT BANK

OHE — OVERHEAD SECONDARY CIRCUIT AND CONDUCTORS

EE — DIRECT BURIED CONDUIT

GROUND ROD

GROUND TEST WELL

FACP — FIRE ALARM CONTROL PANEL

HH — HAND HOLE

MH — MANHOLE

GENERAL NOTES:

1. THIS IS A STANDARD ELECTRICAL SYMBOLOGY SHEET. NOT ALL SYMBOLS MAY BE USED ON THIS PROJECT.
2. SCREENING OR SHADING OF WORK IS USED TO INDICATE EXISTING COMPONENTS OR TO DE–EMPHASIZE PROPOSED IMPROVEMENTS TO HIGHLIGHT SELECTED TRADE WORK. REFER TO CONTEXT OF EACH SHEET FOR USAGE.
3. SEE INSTRUMNETAION LEGEND SHEET FOR PROJECT–SPECIFIC EQUIPMENT SYMBOLS, EQUIPMENT ABBREVIATIONS, AND PIPING SYSTEM ABBREVIATIONS.

AGENCY REVIEW SUBMITTAL GST NO. 2 AT WP NO. 4

AECOM
AECOM TECHNICAL SERVICES, INC.
19219 KATY FREEWAY, SUITE 100
HOUSTON, TEXAS 77094
WWW.AECOM.COM
TBPE REG. NO. F–3580

AECOM Project No.: 60592253

STATE OF TEXAS — C. J. TROUTT — 41075 — REGISTERED PROFESSIONAL ENGINEER — 06/28/2019

SAN JACINTO RIVER AUTHORITY
THE WOODLANDS DIVISION

GROUND STORAGE TANK NO. 2 AT WATER PLANT NO. 4

ISSUE	DATE	DESCRIPTION
0	06/28/2019	ISSUED FOR CONSTRUCTION

SJRA PROJECT NO: WDPR 0098.1001.2G002
FILE NAME: 00E001.dwg
DRAWN BY: Z HARPER / J GARNER
CHECKED BY: C TROUTT
SCALE: NONE

ELECTRICAL

ELECTRICAL LEGEND

SHEET 00E001
SEQ. 28 OF 45

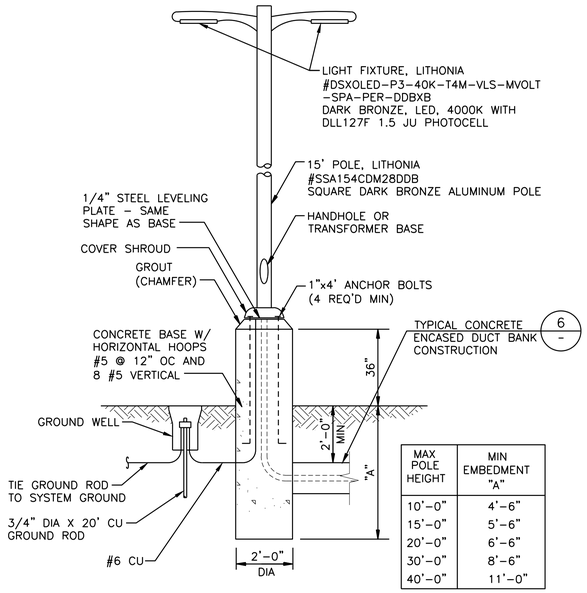

MAX POLE HEIGHT	MIN EMBEDMENT "A"
10'-0"	4'-6"
15'-0"	5'-6"
20'-0"	6'-6"
30'-0"	8'-6"
40'-0"	11'-0"

1 - AREA LIGHTING POLE DETAIL
NOT TO SCALE

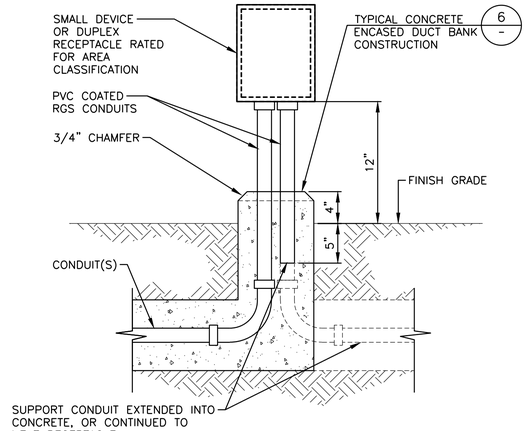

NOTES:
1. LOCATE NEAR OR NEXT TO TANK RING WALL STRUCTURE OR TANK STRUCTURE. SUPPORT SHALL BE WITHIN 12" OF TANK STRUCTURE OR WITHIN 6" OF RING WALL.
2. SUPPORT BOX WITH GALVANIZED, ALUMINUM OR 316 STAINLESS STEEL CHANNEL BRACING.

2 - SMALL DEVICE SUPPORT
NOT TO SCALE

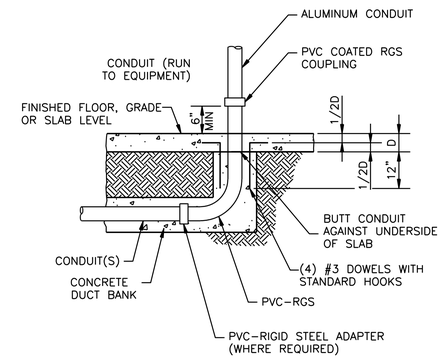

3 - FINISHED AREA CONDUIT STUB-UP DETAIL
NOT TO SCALE

GENERAL NOTES:
1. THESE ARE COMMON DETAILS AND NOT ALL DETAILS MAY BE USED ON THIS PROJECT.

NOTES:
1. ADAPT TO SPECIFIC REQUIREMENTS.
2. USE FOR LARGER DEVICES SUCH AS MOTOR STARTERS, DISCONNECTS, AND CONTROL PANELS.
3. SEE SPECIFICATIONS FOR MATERIALS OF CONSTRUCTION.
4. PROVIDE STAINLESS STEEL 316 HARDWARE TO SECURE INSTRUMENT.

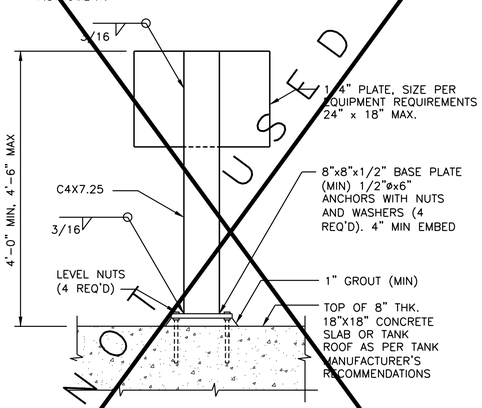

4 - MOUNTING STAND
NOT TO SCALE

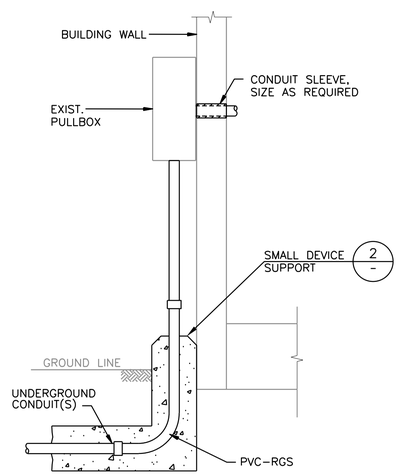

5 - UNDERGROUND CONDUIT BUILDING ENTRY DETAIL
NOT TO SCALE

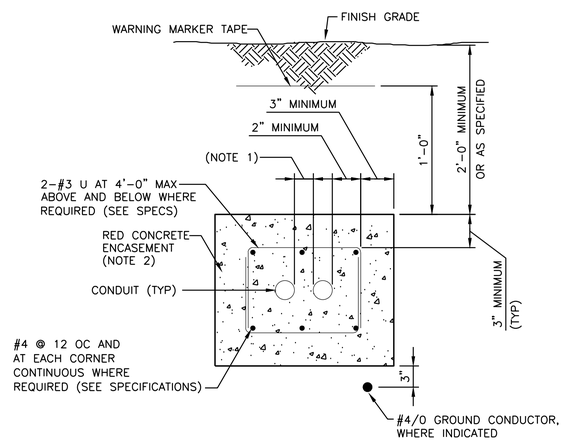

NOTES:
1. PROVIDE CONDUIT SPACERS PER NEC (NFPA-70).
2. CONCRETE FOR UNDERGROUND DUCT BANKS SHALL BE 3,000 PSI WITH A 6" SLUMP. CONCRETE AGGREGATE SHALL BE 3/8" MAXIMUM. DO NOT USE POWER DRIVEN VIBRATION EQUIPMENT. SAN JACINTO RIVER AUTHORITY WILL MAKE COVER INSPECTION OF ALL DUCT BANKS AND SHALL BE NOTIFIED 24 HOURS PRIOR TO CONCRETE PLACEMENT.

6 - TYPICAL CONCRETE ENCASED DUCT BANK CONSTRUCTION
NOT TO SCALE

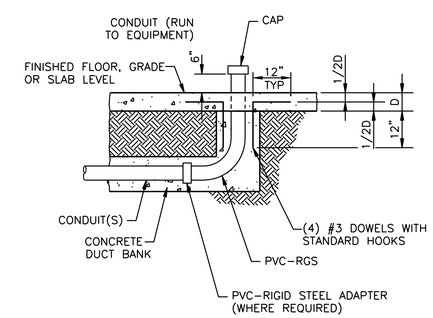

7 - FUTURE CONDUIT STUB-UP DETAIL
NOT TO SCALE

LEGEND:
EXISTING (LIGHT LINE WORK)
PROPOSED (DARK LINE WORK)

AECOM
AECOM TECHNICAL SERVICES, INC.
19219 KATY FREEWAY, SUITE 100
HOUSTON, TEXAS 77094
WWW.AECOM.COM
TBPE REG. NO. F-3580

AECOM Project No.: 60592253

STATE OF TEXAS
C. J. TROUTT
41075
REGISTERED PROFESSIONAL ENGINEER
06/28/2019

SAN JACINTO RIVER AUTHORITY
THE WOODLANDS DIVISION

GROUND STORAGE TANK
NO. 2 AT WATER PLANT
NO. 4

ISSUE	DATE	DESCRIPTION
0	06/28/2019	ISSUED FOR CONSTRUCTION

SJRA PROJECT NO: WDPR 0098.1001.2G002
FILE NAME: 00E501.dwg
DRAWN BY: Z HARPER / J GARNER
CHECKED BY: C TROUTT
SCALE: AS NOTED
ELECTRICAL

ELECTRICAL DETAILS 1

SHEET 00E501
SEQ. 29 OF 45

AGENCY REVIEW SUBMITTAL GST NO. 2 AT WP NO. 4

FILE: P:_PWD\SJRA\60592253 - Well Rehab GST No. 2, WP 4\900 CAD, GIS\910-CAD\20-SHEETS\ELECTRICAL\00E501.dwg LAYOUT: 00E501 DATE: 6/27/2019 3:23:52 PM BY: GARNERJ

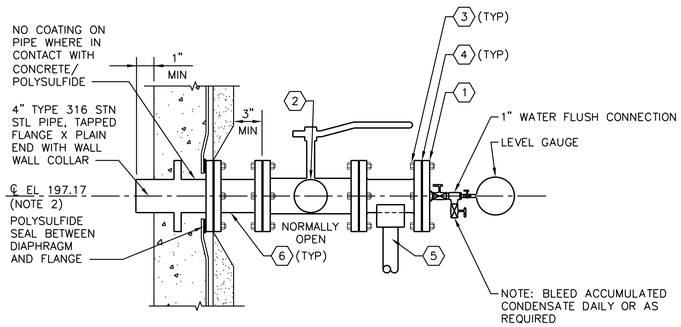

1 FLANGED LEVEL GAUGE
NOT TO SCALE

	ACCESSORIES SCHEDULE
ITEM	DESCRIPTION
1	BLIND FLANGED WITH TAP
2	4" BALL VALVE
3	5/8" X 2 1/2" BOLT, NUT AND WASHER
4	GASKET
5	PIPE SUPPORT (NOTE 3)
6	4" TYPE 316 STN STL PIPE, FLANGED X FLANGED (NOTE 1)

NOTES:

1. INSULATE EXPOSED PIPING.
2. CONTRACTOR TO VERIFY LEVEL TRANSDUCER CENTERLINE ELEVATION MATCH LEVEL TRANSDUCER GST-1 CENTERLINE ELEVATION.
3. ADD SUPPORT AT LOCATION SHOWN. SEE DETAIL 5 ON SHEET 02D502.
4. BLEED ACCUMULATED CONDENSATE DAILY OR AS REQUIRED

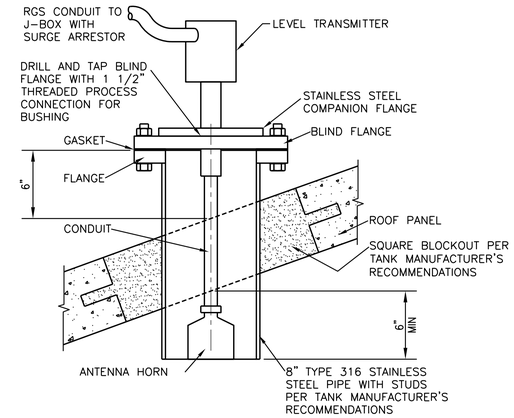

2 RADAR LEVEL SENSOR INSTALLATION ON GST ROOF
NOT TO SCALE

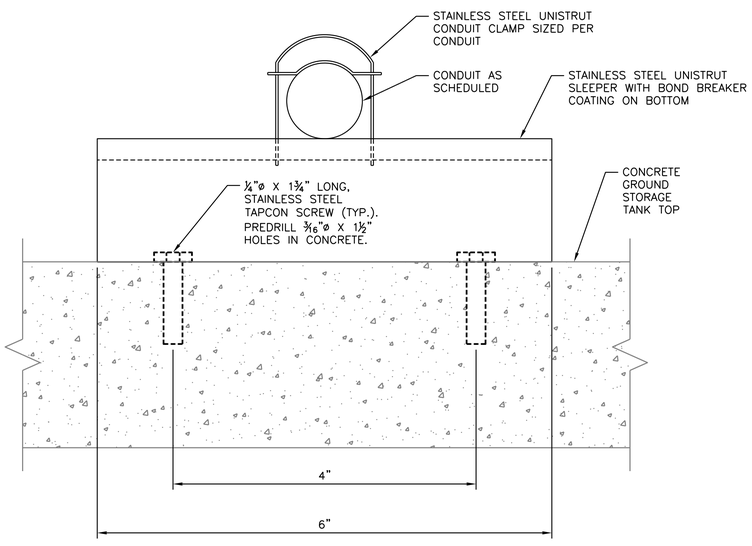

4 TYPICAL CONDUIT SLEEPER
NOT TO SCALE

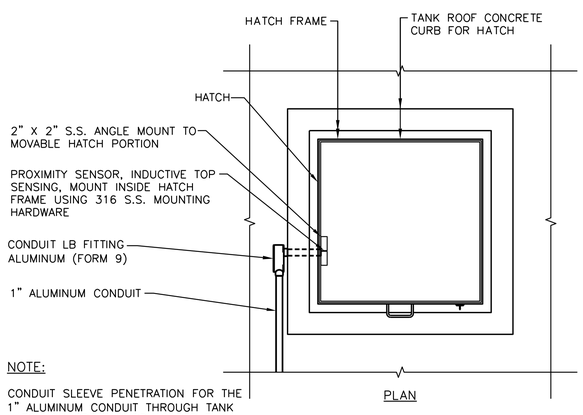

NOTE:

CONDUIT SLEEVE PENETRATION FOR THE 1" ALUMINUM CONDUIT THROUGH TANK HATCH CONCRETE CURB AS PER TANK MANUFACTURER'S RECOMMENDATIONS, REFER TO DRAWING 02E101 FOR LOCATION.

3 GST HATCH CONTACT
NOT TO SCALE

LEGEND:

EXISTING (LIGHT LINE WORK)

PROPOSED (DARK LINE WORK)

AECOM

AECOM TECHNICAL SERVICES, INC.
19219 KATY FREEWAY, SUITE 100
HOUSTON, TEXAS 77094
WWW.AECOM.COM
TBPE REG. NO. F-3580

AECOM Project No.: 60592253

STATE OF TEXAS
C. J. TROUTT
41075
REGISTERED PROFESSIONAL ENGINEER
06/28/2019

SAN JACINTO RIVER AUTHORITY
THE WOODLANDS DIVISION

GROUND STORAGE TANK NO. 2 AT WATER PLANT NO. 4

ISSUE	DATE	DESCRIPTION
0	06/28/2019	ISSUED FOR CONSTRUCTION

SJRA PROJECT NO: WDPR 0098.1001.2G002
FILE NAME: 00E502.dwg
DRAWN BY: Z HARPER / J GARNER
CHECKED BY: C TROUTT
SCALE: AS NOTED

ELECTRICAL

ELECTRICAL DETAILS 2

SHEET 00E502
SEQ. 30 OF 45

AGENCY REVIEW SUBMITTAL GST NO. 2 AT WP NO. 4

FILE: P:_PWD\SJRA\60592253 - Well Rehab GST No. 2, WP 4\900 CAD, GIS\910-CAD\20-SHEETS\ELECTRICAL\00E502.dwg LAYOUT: 00E502 DATE: 7/3/2019 8:31:46 AM BY: HARPERZ

Date: Jul 03, 2019 - 8:31am User: harperz File: P:_PWD\SJRA\60592253 - Well Rehab GST No. 2, WP 4\900 CAD, GIS\910-CAD\20-SHEETS\ELECTRICAL\00E502.dwg

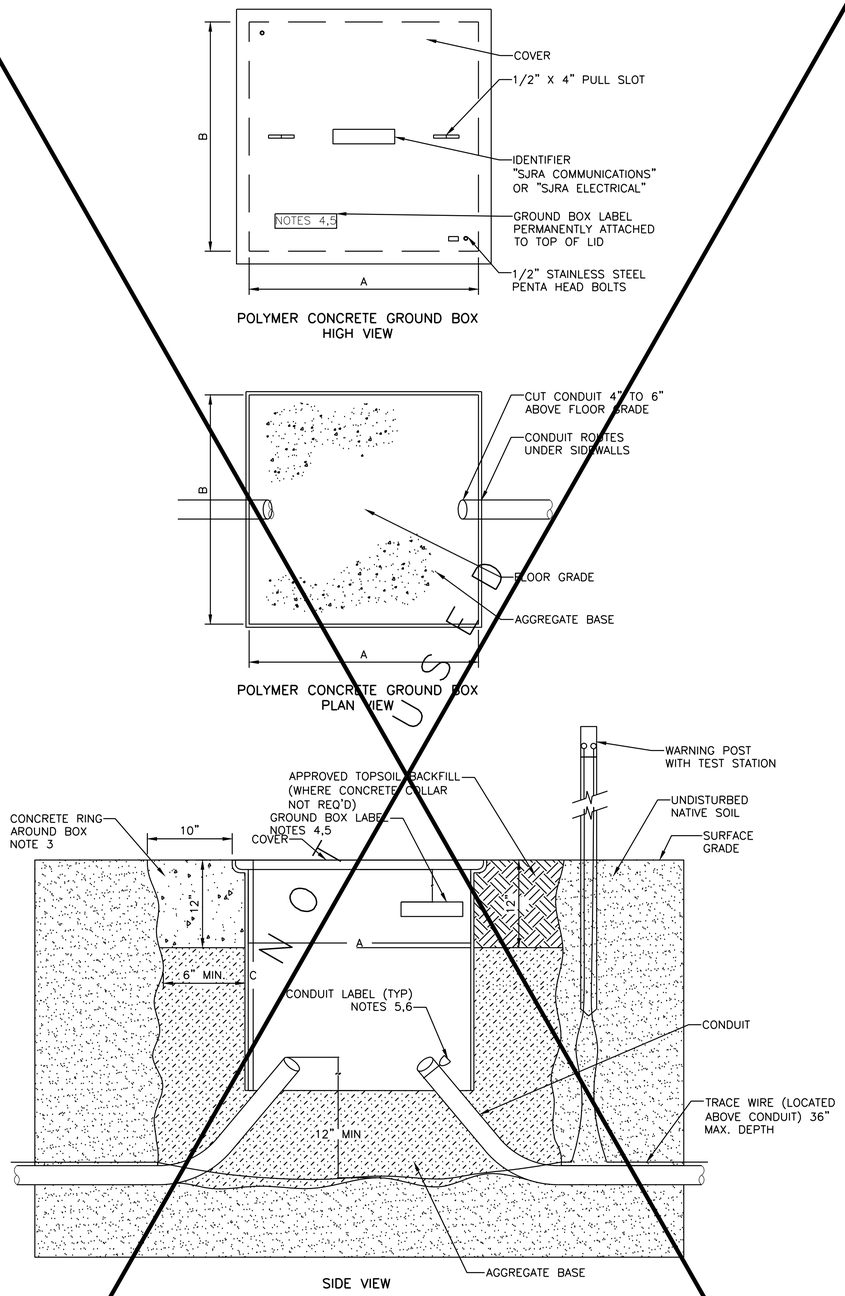

1 GENERAL PURPOSE (NON-TRAFFIC RELATED) POLYMER CONCRETE GROUND BOX INSTALLATION
NOT TO SCALE

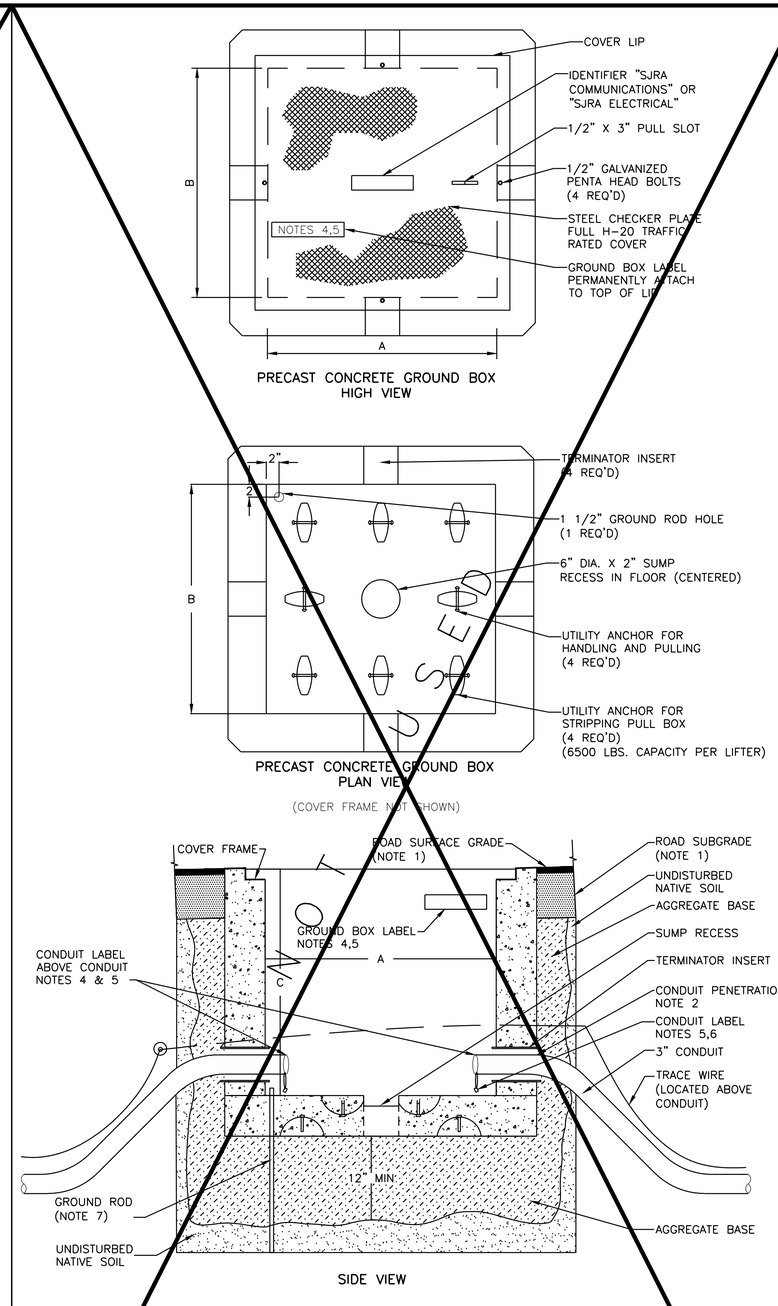

2 TRAFFIC RATED REINFORCED PRECAST CONCRETE GROUND BOX INSTALLATION
NOT TO SCALE

GROUND BOX INSIDE DIMENSIONS FOR DETAILS 1 AND 2			
NUMBER OF CONDUITS	A	B	C
1 OR 2	36	36	36
3	48	48	36

NOTES:

1. CUT AND PATCH ROADWAY IN ACCORDANCE WITH SPECIFICATIONS AND PIPELINE STANDARD DETAILS.
2. GROUT AND SEAL AROUND CONDUIT.
3. PROVIDE POURED CONCRETE COLLAR AROUND GROUND BOXES OR TEST STATION BOX LOCATED NEXT TO A ROAD OR ANY OTHER AREA SUBJECT TO OCCASIONAL VEHICULAR TRAFFIC.
4. PERMANENTLY ATTACH GROUND BOX LABEL LOCATED FOR EASY READING.
5. PROVIDE GROUND BOX AND CONDUIT LABELS IN ACCORDANCE WITH SPECIFICATIONS.
6. POSITION CONDUIT LABEL FOR EASY READING FROM OUTSIDE OF GROUND BOX WHEN COVER IS REMOVED.
7. SEE SPECIFICATIONS FOR ADDITIONAL GROUNDING REQUIREMENTS.
8. SEE SPECIFICATIONS FOR ADDITIONAL GROUND BOX AND TRACE WIRE INSTALLATION REQUIREMENTS.

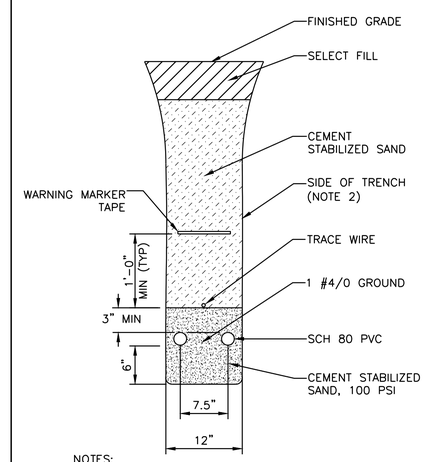

NOTES:

1. CONDUIT DEPTH VARIES. CONDUIT DEPTH SHALL BE AS SHOWN ON THE ACCESS ASPHALT ROAD PLAN AND PROFILE DRAWINGS.
2. SEE TRENCH SYSTEM SAFETY SPECIFICATIONS FOR MAXIMUM ALLOWABLE SLOPES.

3 ELECTRICAL CONDUIT TRENCH
NOT TO SCALE

AECOM
AECOM TECHNICAL SERVICES, INC.
19219 KATY FREEWAY, SUITE 100
HOUSTON, TEXAS 77094
WWW.AECOM.COM
TBPE REG. NO. F-3580

AECOM Project No.: 60592253

STATE OF TEXAS
C. J. TROUTT
41075
REGISTERED PROFESSIONAL ENGINEER
06/28/2019

SAN JACINTO RIVER AUTHORITY
THE WOODLANDS DIVISION

SAN JACINTO RIVER AUTHORITY SJRA www.SJRA.net

GROUND STORAGE TANK NO. 2 AT WATER PLANT NO. 4

ISSUE	DATE	DESCRIPTION
0	06/28/2019	ISSUED FOR CONSTRUCTION

SJRA PROJECT NO: WDPR 0098.1001.2G002
FILE NAME: 00E503.dwg
DRAWN BY: Z HARPER / J GARNER
CHECKED BY: C TROUTT
SCALE: NOT TO SCALE
ELECTRICAL

ELECTRICAL DETAILS 3

SHEET 00E503
SEQ. 31 OF 45

AGENCY REVIEW SUBMITTAL GST NO. 2 AT WP NO. 4

FILE: P:_PWD\SJRA\60592253 – Well Rehab GST No. 2, WP 4\900 CAD, GIS\910-CAD\20-SHEETS\ELECTRICAL\00E503.dwg LAYOUT: 00E503 DATE: 6/27/2019 3:24:18 PM BY: GARNERJ

DUCTBANK/CONDUIT SCHEDULE

DUCT BANK NO.	CONDUIT TAG
1	MSE-001A, MSE-001F, MSE-001B, MSE-001G, MSE-001C, MSE-001D, T-1, MSE-001E
1B	MSE-001A, MSE-001E, MSE-001B, MSE-001F, MSE-001C, MSE-001G, MSE-001D
2	MCCA-13-C1, MCCA-13-P1, MCC-13-C11, MCCA-13-P2, SCP SPARE 11, MCCA-13-P3, LPA SPARE, LPA SPARE, LPB-19, LPB SPARE 19 1"C, 2 #12. 1 #12 GND
2A	MCC-13-I1, MCCA-13-C12
3	LPA SPARE 2
4	LPB-6, LPB SPARE 6, LPB-21, MCCA SPARE 2, LPB-35, SCP SPARE 4, LPB-36, SCP SPARE 5, MCC-14-11, MCCA-14-C1, MCCA-14-P1, LPB SPARE 1, MCCA-14-P2, LPB SPARE 3, MCCA-14-P3, LPB SPARE 21, SCP SPARE 10 1"C
4A	MCCA-14-C1, LPA SPARE 3, MCC-14-C11, LPB-21, MCCA-14-P1, LPC-9, MCCA-14-P2, LPB SPARE 21, MCCA-14-P3 1"C
4A1	MCCA-14-C1, MCCA-14-P1, MCCA-14-I1, MCCA-14-P2, LPB-21, MCCA-14-P3, LPB-21 1"C, 2 #12. 1 #12 GND
4A2	LPA SPARE 3
4A2A	LPA SPARE 3, SCP SPARE 10 2"C EMPTY WITH PULL LINE
4A2B	SCP SPARE 10
4B	LPB-6, LPB SPARE 6, LPB-36, MCCA SPARE 2, LPB SPARE 1, SCP SPARE 5, LPB SPARE 3, SCP SPARE 10
4B1	LPB SPARE 1 2"C EMPTY WITH PULL LINE LPB SPARE 3 2"C EMPTY WITH PULL LINE MCCA SPARE 2 2"C EMPTY WITH PULL LINE SCP SPARE 5 2"C EMPTY WITH PULL LINE
4B2	LPB-6, LPB SPARE 6, LPB-36, SCP SPARE 10
4B2A	SCP SPARE 10 1"C EMPTY WITH PULL LINE
4B2B	LPB-36 1"C, 2 #10, 1 #12 GND
4B2C	LPB SPARE 6 1"C EMPTY WITH PULL LINE
4B2D	LPB-6 1"C, 2 #10, 1 #12 GND
4C	LPB-35 1"C, 2 #10, 1 #12 GND
4Z	MCCA-14-I1, MCCA-14-C12
5	LPB-10, LPB SPARE 4, LPB-14,16
5A	LPB-14,16 2"C EMPTY WITH PULL LINE
5B	LPB-10, LPB SPARE 4
5B1	LPB-10 1"C, 2 #10, 1 #12 GND
5B2	LPB SPARE 4 2"C EMPTY WITH PULL LINE
A	I-100, LPA SPARE 1
B	CPC-8, LPC-10
C	I-8, I-101
C1	I-8
C2	I-101
D	I-2, I-5, I-3A, I-9, I-3B, I-102, I-3C, SCP SPARE 9, I-4, SCP SPARE 10
D1	I-4, I-102, I-5, SCP SPARE 9, I-9, SCP SPARE 10
D1A	I-4, I-102, I-5, SCP SPARE 10, I-9
D1A1	I-102, SCP SPARE 10
D1A3	I-9
D1B	I-4, I-5
D3	I-2, I-3B, I-3A, I-3C
D3A1	I-2
D3A2	I-3B
D3A3	I-3A
D3A4	I-3C
F	ANT-001

EXISTING LIGHTING PANEL "B" 120/240V, 1ø, 3W SURFACE MOUNTED

10,000A RMS SYMMETRICAL INTEGRATED RATING MINIMUM — 175A MCB — BOLTED IN BREAKER NEMA 1 ENCLOSURE

SERVES	LOAD (VA)	CB (AMPS)	CKT NO.	CKT NO.	CB (AMPS)	LOAD (VA)	SERVES
CHLORINATOR UNIT NO. 1 (CU1) AND CHLORINE ROOM RECEPTACLE	500	20	1	2	20	500	CHLORINATOR UNIT NO. 2 (CU2) AND CHLORINE ROOM RECEPTACLE
CHLORINATOR UNIT NO. 3 (CU3) AND CHLORINE ROOM RECEPTACLE	500	20	3	4	20	1,000	UNDER SINK WATER HEATER
EMERGENCY SHOWER	1,000	20*	5	6	30	500	GATE OPERATOR
BLANK	–	--	7	8	20	–	SPARE
SUMP PUMPS	500	20	9	10	20*	1,000	GROUND STORAGE TANK NO. 1 HEAT TRACING
SPARE	–	20	11	12	--	–	BLANK
SUMP PUMPS	500	20	13	14	20*	1,000	**GROUND STORAGE TANK NO. 2 HEAT TRACING**
BLANK	–	--	15	16	20	**300**	**GST NO. 2 RECEPTACLE, SITE LIGHT POLE**
GENERATOR ROOM LIGHTS	600	20	17	18	20	500	CL2 BP SUCTION SV
AREA LIGHT AT WATER WELL NO. 29	600	20	19	20	20	1,000	WATER WELL NO. 29 OILER
AREA LIGHT AT WATER WELL NO. 30	600	20	21	22	20	500	WATER WELL NO. 29 MOTOR SPACE HEATER
SPARE	–	20	23	24	20	500	WATER WELL NO. 29 469 RELAY
BOOSTER PUMP NO. 1 SPACE HEATER	300	20	25	26	20	1,000	WATER WELL NO. 30 OILER
BOOSTER PUMP NO. 2 SPACE HEATER	300	20	27	28	20	500	WATER WELL NO. 30 MOTOR SPACE HEATER
BOOSTER PUMP NO. 3 SPACE HEATER (FUTURE)	300	20	29	30	20	500	WATER WELL NO. 30 469 RELAY
BOOSTER PUMP NO. 4 SPACE HEATER	300	20	31	32	20*	1,000	WEST SURGE VALVE HEAT TRACING
BOOSTER PUMP NO. 5 SPACE HEATER (FUTURE)	300	20	33	34	--	–	BLANK
EAST SURGE VALVE HEAT TRACING	–	20*	35	36	20	600	AREA LIGHT AT GATE VIA LC
BLANK	–	--	37	38	20		
EMERGENGY SHOWER	1,000	20*	39	40	20	–	SPARE
BLANK	–	--	41	42	20	–	SPARE

* DENOTES GFI CIRCUIT BREAKER.

** DENOTES HACR RATED CIRCUIT BREAKER.

LEGEND:

EXISTING (LIGHT LINE WORK)

PROPOSED (DARK LINE WORK)

AECOM

AECOM TECHNICAL SERVICES, INC.
19219 KATY FREEWAY, SUITE 100
HOUSTON, TEXAS 77094
WWW.AECOM.COM
TBPE REG. NO. F-3580

AECOM Project No.: 60592253

STATE OF TEXAS — C. J. TROUTT — 41075 — REGISTERED PROFESSIONAL ENGINEER — 06/28/2019

SAN JACINTO RIVER AUTHORITY
THE WOODLANDS DIVISION

SAN JACINTO RIVER AUTHORITY — SJRA — www.SJRA.net

GROUND STORAGE TANK NO. 2 AT WATER PLANT NO. 4

ISSUE	DATE	DESCRIPTION
0	06/28/2019	ISSUED FOR CONSTRUCTION

SJRA PROJECT NO: WDPR 0098.1001.2G002
FILE NAME: 00E601.dwg
DRAWN BY: Z HARPER / J GARNER
CHECKED BY: C TROUTT
SCALE: NONE

ELECTRICAL

ELECTRICAL SCHEDULES 1

SHEET 00E601
SEQ. 32 OF 45

AGENCY REVIEW SUBMITTAL GST NO. 2 AT WP NO. 4

FILE: P:_PWD\SJRA\60592253 – Well Rehab GST No. 2, WP 4\900 CAD, GIS\910-CAD\20-SHEETS\ELECTRICAL\00E601.dwg LAYOUT: 00E601 DATE: 6/27/2019 3:24:31 PM BY: GARNERJ

FLOW AND PRESSURE CONTROL STATION CONDUIT AND CABLE SCHEDULE

CONDUIT		CABLES						
ITEM	SIZE	POWER	GROUND	CONTROL	INSTR	FROM	TO	REMARKS
BLDG-C-001	2"	3 #4	1 #10	---	----	MCCA	PP-1	-
BLDG-C-002	2"	-	--	---	6 #16 STP	WFR CONTROL PANEL	GR-GWP04-MS-BLDG-PLC-01-001	-
BLDG-C-003	1"	-	1 #14	10 #14	----	WFR CONTROL PANEL	CL ROOM PULLBOX 1	-
BLDG-C-004	1"	-	--	---	6 #16 STP	WFR CONTROL PANEL	CL ROOM PULLBOX 2	-
BLDG-C-005	2"	CO	--	---	----	PUMP BUILDING	FPCS	PROVIDE PULL STRING
BLDG-C-006	2"	CO	--	---	----	PUMP BUILDING	FPCS	PROVIDE PULL STRING
GST-C001	1"	2 #12	1 #12	---	----	GR-GWP04-MS-BLDG-PLC-01-001	LIT-01	-
GST-C002	1"	-	--	---	----	GR-GWP04-MS-BLDG-PLC-01-001	LIT-01	-
GST-C003	1"	2 #12	1 #12	---	----	MPC-1	GST NO. 1 HEAT TRACE	-
GST-C004	1"		**SHIELDED W/DRAIN**	---	**1 PR #18**	GR-GWP04-MS-BLDG-PLC-01-001	**GST NO. 2 LEVEL SENSOR**	-
MS-C001	1"	2 #4	1 #10	---	----	PP-1	MPC-1	-
MS-C002	1"	3 #12	1 #12	---	----	PP-1	FCV-01-001	-
MS-C003	1"	2 #12	1 #12	---	----	MPC-1	PLC ISOLATION TRANSFORMER	-
MS-C004	1"	4 #12	1 #12	4 #14	----	24VDC BATTERY SYSTEM	GR-GWP04-MS-BLDG-PLC-01-001	-
MS-C005	1 1/2"	CO	-	--	----	GR-GEP04-MS-BLDG-01-001	FOTP	-
MS-C006	1"	2 #12	1 #12	--	----	GR-GEP04-MS-BLDG-01-001	FIT-01	-
MS-C007	1"	2 #12	1 #12	--	----	MPC-1	AIT-01-ANALYZER PANEL	-
MS-C008	1"	-	1 #14	4 #14	----	GR-GWP04-MS-BLDG-PLC-01-001	FCV-01-001 CONTROL STATION	-
MS-C009	1"	-	--	---	2 #16 STP	GR-GWP04-MS-BLDG-PLC-01-001	FCV-01-001 CONTROL STATION	-
MS-C010	1"	-	--	---	1 #16 STP	GR-GWP04-MS-BLDG-PLC-01-001	PIT-01	-
MS-C011	1"	-	--	---	1 CAT6	GR-GWP04-MS-BLDG-PLC-01-001	PIT-01	PVC COATED RGS
MS-C012	1"	-	--	---	1 #16 STP	GR-GWP04-MS-BLDG-PLC-01-001	APIT-01 ANALYZER PANEL	-
MS-C013	1"	-	1 #14	4 #14	----	FCV-01-001 CONTROL STATION	FCV-01	-
MS-C014	1"	-	--	---	1 #16 STP	FCV-01-001 CONTROL STATION	FCV-01	-
MS-C015	1"		**SHIELDED W/DRAIN**	**1 PR #18**	----	WRF CONTROL PANEL	**FLUSHING VALVE POSITION SWITCH**	
MS-C016	1"	2 #12	1 #12	---	----	MPC-1	HEAT TRACE	-
MS-C017	1"	2 #12	1 #12	---	----	MPC-1	HEAT TRACE	-
MS-C018	1"	2 #12	1 #12	---	----	FCV-01-001 CONTROL STATION	HEAT TRACE	-
MS-C019	1"	2 #12	1 #12	---	----	PLC ISOLATION TRANSFORMER	GR-GWP04-MS-BLDG-01-001	-
SITE-C001	3"	CO	--	---	----	GROUND BOX	FOTP	PROVIDE PULL STRING

LEGEND:

EXISTING (LIGHT LINE WORK)

PROPOSED (DARK LINE WORK)

AECOM

AECOM TECHNICAL SERVICES, INC.
19219 KATY FREEWAY, SUITE 100
HOUSTON, TEXAS 77094
WWW.AECOM.COM
TBPE REG. NO. F-3580

AECOM Project No.: 60592253

STATE OF TEXAS
C. J. TROUTT
41075
REGISTERED PROFESSIONAL ENGINEER
06/28/2019

SAN JACINTO RIVER AUTHORITY
THE WOODLANDS DIVISION

SAN JACINTO RIVER AUTHORITY
SJRA
www.SJRA.net

GROUND STORAGE TANK NO. 2 AT WATER PLANT NO. 4

ISSUE	DATE	DESCRIPTION
0	06/28/2019	ISSUED FOR CONSTRUCTION

SJRA PROJECT NO: WDPR 0098.1001.2G002
FILE NAME: 00E602.dwg
DRAWN BY: Z HARPER / J GARNER
CHECKED BY: C TROUTT
SCALE: NONE

ELECTRICAL

ELECTRICAL SCHEDULES 2

SHEET 00E602
SEQ. 33 OF 45

AGENCY REVIEW SUBMITTAL GST NO. 2 AT WP NO. 4

FILE: P:_PWD\SJRA\60592253 - Well Rehab GST No. 2, WP 4\900 CAD, GIS\910-CAD\20-SHEETS\ELECTRICAL\00E602.dwg LAYOUT: 00E602 DATE: 6/27/2019 3:24:43 PM BY: GARNERJ

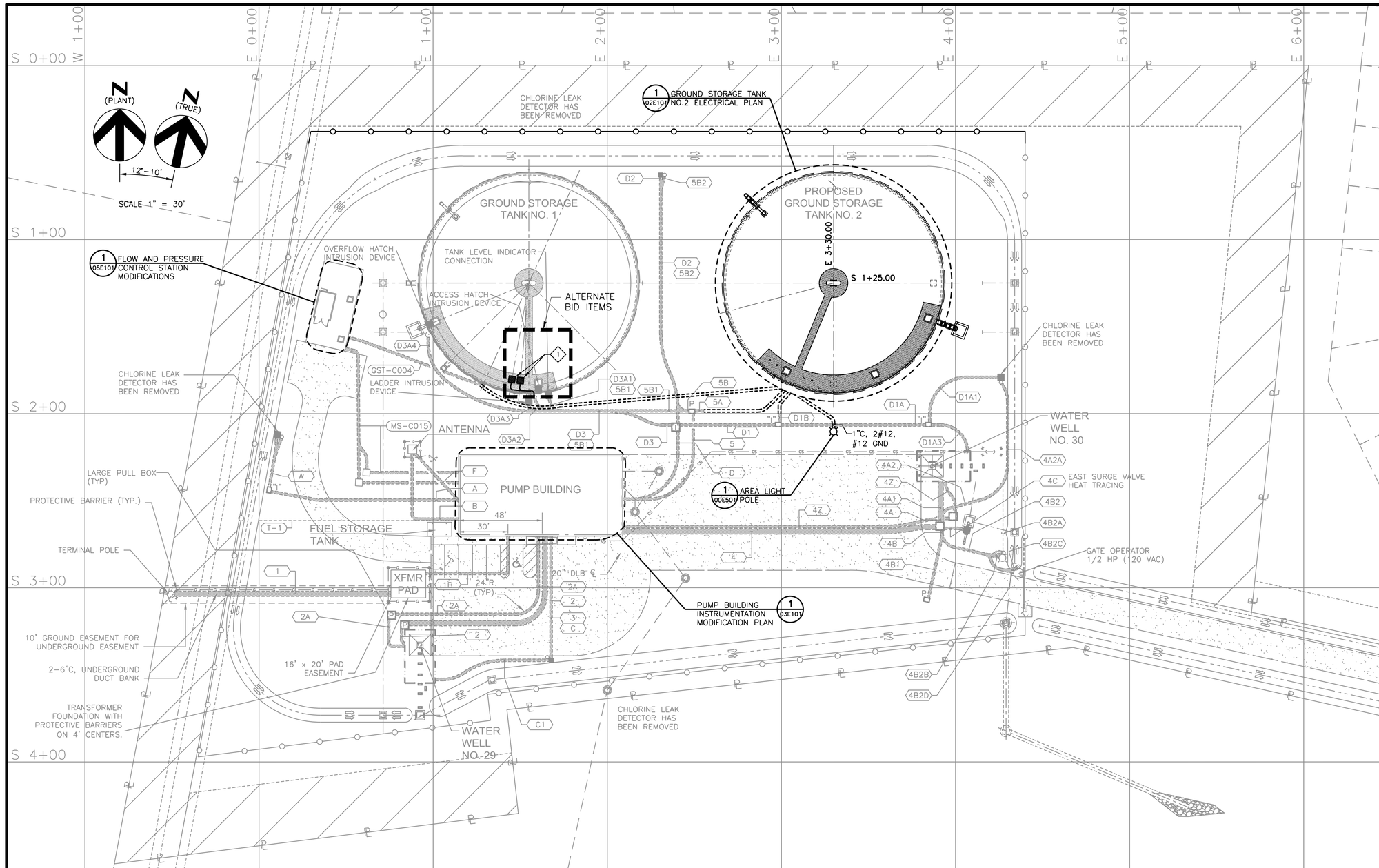

KEY/NOTES

- X DETAIL DESIGNATION
- 1 / 2 00E502 RADAR LEVEL SENSOR INSTALLATION ON GST ROOF

AECOM

AECOM TECHNICAL SERVICES, INC.
19219 KATY FREEWAY, SUITE 100
HOUSTON, TEXAS 77094
WWW.AECOM.COM
TBPE REG. NO. F-3580

AECOM Project No.: 60592253

STATE OF TEXAS
C. J. TROUTT
41075
REGISTERED PROFESSIONAL ENGINEER
06/28/2019

SAN JACINTO RIVER AUTHORITY
THE WOODLANDS DIVISION

SAN JACINTO RIVER AUTHORITY
SJRA
www.SJRA.net

GROUND STORAGE TANK NO. 2 AT WATER PLANT NO. 4

ISSUE	DATE	DESCRIPTION
0	06/28/2019	ISSUED FOR CONSTRUCTION

SJRA PROJECT NO: WDPR 0098.1001.2G002
FILE NAME: 01E101.dwg
DRAWN BY: Z HARPER / J GARNER
CHECKED BY: C TROUTT
SCALE: AS NOTED

ELECTRICAL

ELECTRICAL SITE PLAN MODIFICATIONS

SHEET 01E101
SEQ. 34 OF 45

LEGEND:
- EXISTING (LIGHT LINE WORK)
- PROPOSED (DARK LINE WORK)

AGENCY REVIEW SUBMITTAL GST NO. 2 AT WP NO. 4

FILE: P:_PWD\SJRA\60592253 - Well Rehab GST No. 2, WP 4\900 CAD, GIS\910-CAD\20-SHEETS\ELECTRICAL\01E101.dwg LAYOUT: 01E101 DATE: 6/27/2019 3:25:08 PM BY: GARNERJ

Date: Jun 27, 2019 - 3:25pm User: garnerj File: P:_PWD\SJRA\60592253 - Well Rehab GST No. 2, WP 4\900 CAD, GIS\910-CAD\20-SHEETS\ELECTRICAL\01E101.dwg

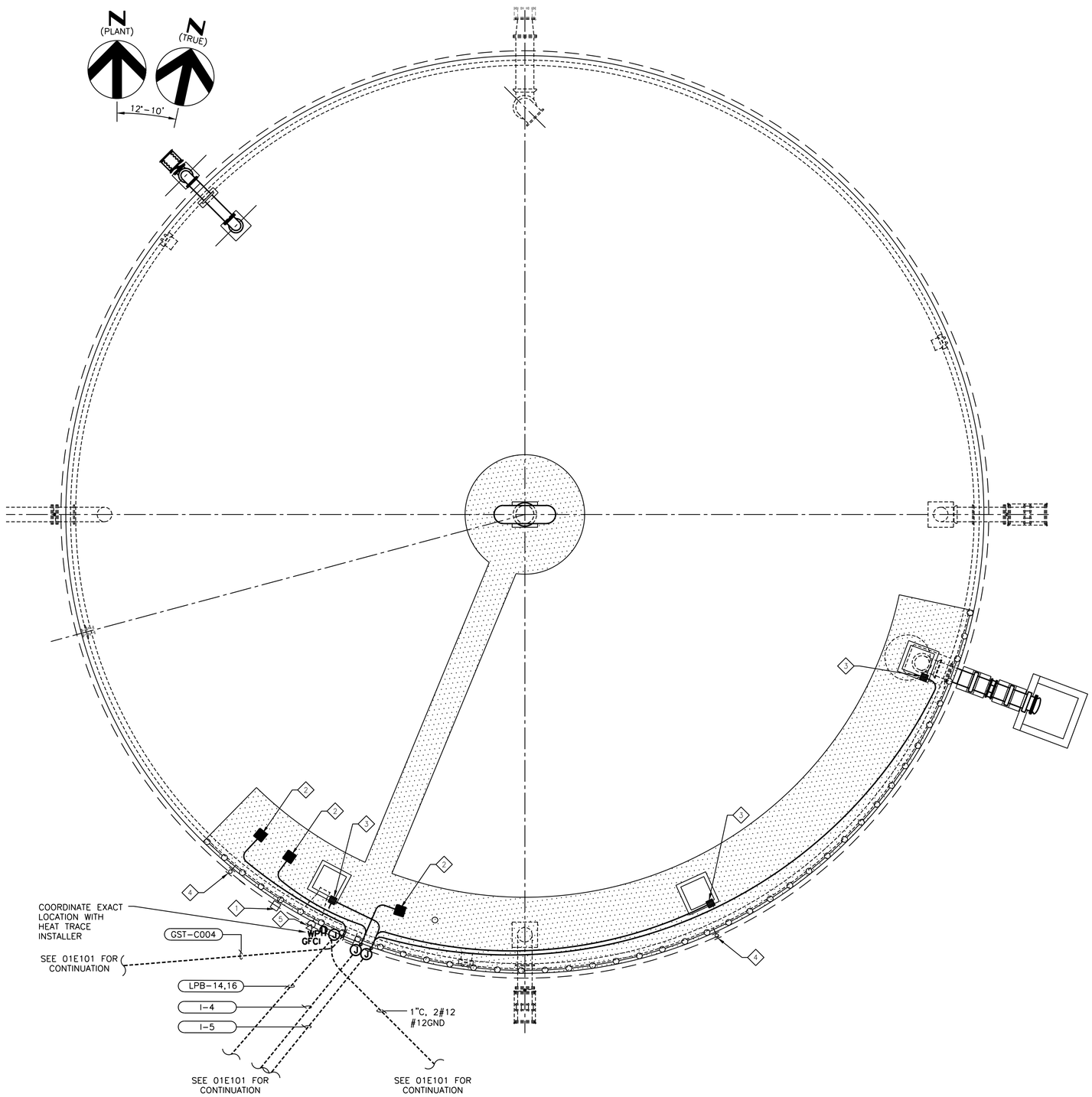

1 GROUND STORAGE TANK NO.2 ELECTRICAL PLAN
1/8" = 1'-0"

GENERAL NOTES:

1. FIELD ROUTE CONDUIT WITH CONDUCTORS TO CONNECTION POINT AS SHOWN ON GROUND STORAGE TANK ROOF. TANK MANUFACTURER SHALL PROVIDE AND INSTALL CONDUIT SUPPORT PADS WITH CLAMPS FOR VERTICAL SUPPORT ON TANK WALL AND HORIZONTAL SUPPORT ON TANK ROOF.
2. INSTALL CONDUIT ON UNISTRUT SLEEPERS (P1000 X 6" LONG) AT 5'-0" OC ANCHORED TO GROUND STORAGE TANK TOP WITH STAINLESS STEEL ANCHORS. USE (2)-1/4" DIA X 1 3/4" STAINLESS STEEL TAPCON SCREWS SPACED @ 4" IN EACH UNISTRUT SLEEPER. FIELD ROUTE TO SUIT CONDUITS. USE ALUMINUM UNISTRUT CLAMP TO CONNECT CONDUIT TO UNISTRUT SLEEPER. SEE DETAIL 4 ON SHEET 00E502 FOR TYPICAL CONDUIT SLEEPER DETAIL.
3. FIELD ROUTE CONDUIT UP LADDER STAND OFF SUPPORTS WITH 316 STN STL FASTENERS SUPPORTS AND HARDWARE. ALL ABOVE GROUND CONDUIT SHALL BE RIGID ALUMINUM CONDUIT WITH FORM 9 FITTINGS.
4. PROVIDE ABOVE GROUND JUNCTION BOXES FOR WIRE MANAGEMENT
5. NO TOP PENETRATIONS SHALL BE MADE IN ANY PLC PANEL. IF BOTTOM ENTRY IS NOT POSSIBLE, SIDE ENTRY SHALL BE USED.

KEY/NOTES

- X — DETAIL DESIGNATION
- 1 — 1 / 00E502 FLANGED LEVEL GAUGE
- 2 — 2 / 00E502 RADAR LEVEL SENSOR INSTALLATION ON GST ROOF
- 3 — 3 / 00E502 GST HATCH CONTACT
- 4 — 2 / 02D502 SPARE WALL NOZZLE
- 5 — 3 / 02D502 SAMPLE FAUCET

AECOM
AECOM TECHNICAL SERVICES, INC.
19219 KATY FREEWAY, SUITE 100
HOUSTON, TEXAS 77094
WWW.AECOM.COM
TBPE REG. NO. F-3580

AECOM Project No.: 60592253

STATE OF TEXAS
C. J. TROUTT
41075
REGISTERED PROFESSIONAL ENGINEER
06/28/2019

SAN JACINTO RIVER AUTHORITY
THE WOODLANDS DIVISION

SAN JACINTO RIVER AUTHORITY SJRA www.SJRA.net

GROUND STORAGE TANK NO. 2 AT WATER PLANT NO. 4

ISSUE	DATE	DESCRIPTION
0	06/28/2019	ISSUED FOR CONSTRUCTION

SJRA PROJECT NO: WDPR 0098.1001.2G002
FILE NAME: 02E101.dwg
DRAWN BY: Z HARPER / J GARNER
CHECKED BY: C TROUTT
SCALE: AS NOTED
ELECTRICAL

GROUND STORAGE TANK NO. 2 PLAN

SHEET 02E101
SEQ. 35 OF 45

AGENCY REVIEW SUBMITTAL GST NO. 2 AT WP NO. 4

FILE: P:_PWD\SJRA\60592253 - Well Rehab GST No. 2, WP 4\900 CAD, GIS\910-CAD\20-SHEETS\ELECTRICAL\02E101.dwg LAYOUT: 02E101 DATE: 6/27/2019 3:25:21 PM BY: GARNERJ

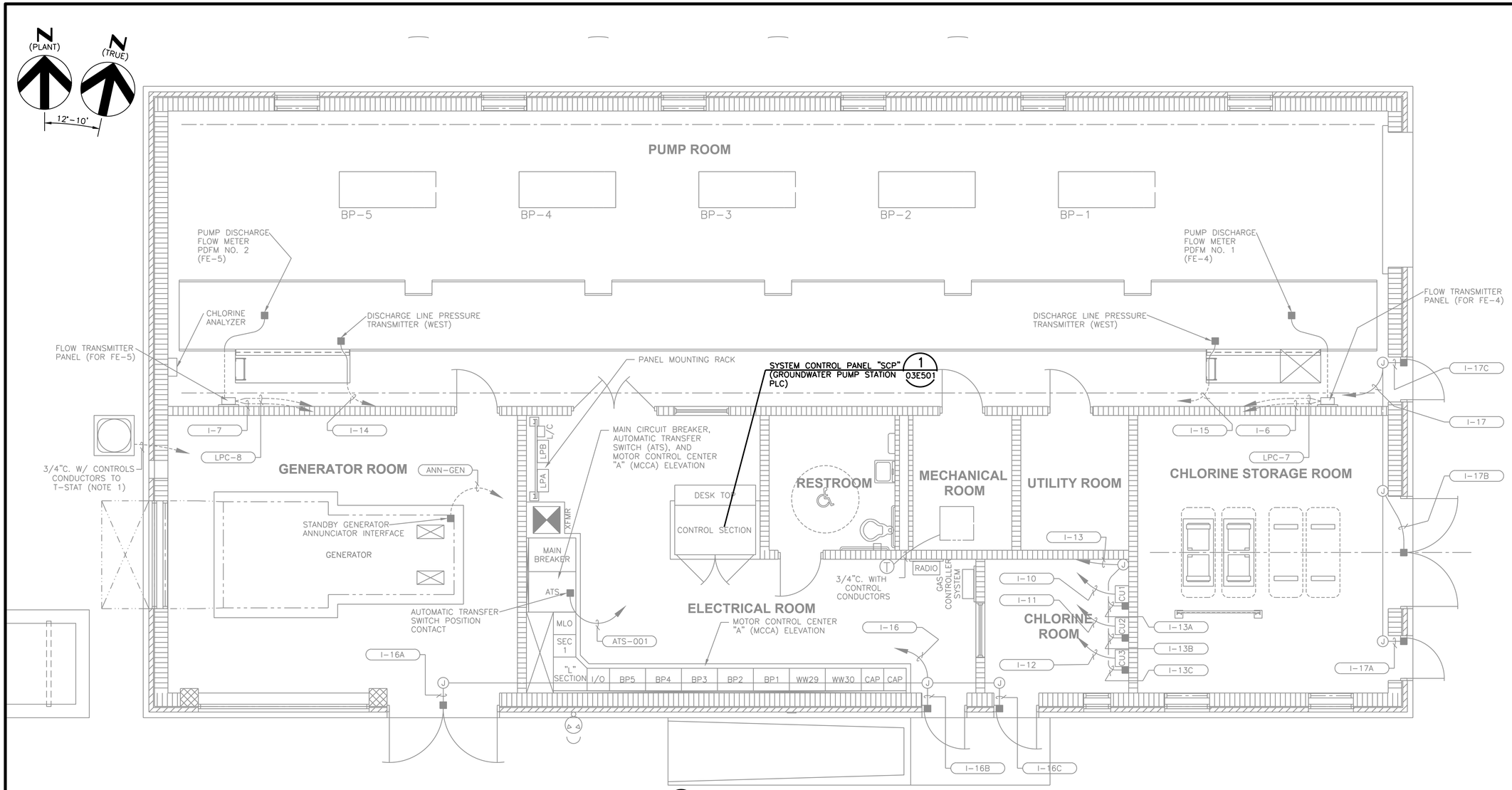

1 INSTRUMENTATION MODIFICATIONS PLAN
1/4" = 1'-0"

LEGEND:

EXISTING (LIGHT LINE WORK)

PROPOSED (DARK LINE WORK)

AECOM

AECOM TECHNICAL SERVICES, INC.
19219 KATY FREEWAY, SUITE 100
HOUSTON, TEXAS 77094
WWW.AECOM.COM
TBPE REG. NO. F-3580

AECOM Project No.: 60592253

STATE OF TEXAS
C. J. TROUTT
41075
REGISTERED PROFESSIONAL ENGINEER
06/28/2019

SAN JACINTO RIVER AUTHORITY
THE WOODLANDS DIVISION

SAN JACINTO RIVER AUTHORITY
SJRA
www.SJRA.net

GROUND STORAGE TANK NO. 2 AT WATER PLANT NO. 4

ISSUE	DATE	DESCRIPTION
0	06/28/2019	ISSUED FOR CONSTRUCTION

SJRA PROJECT NO: WDPR 0098.1001.2G002
FILE NAME: 03E101.dwg
DRAWN BY: Z HARPER / J GARNER
CHECKED BY: C TROUTT
SCALE: AS NOTED

ELECTRICAL

PUMP BUILDING INSTRUMENTATION PLAN MODIFICATIONS

SHEET 03E101
SEQ. 36 OF 45

AGENCY REVIEW SUBMITTAL GST NO. 2 AT WP NO. 4

FILE: P:_PWD\SJRA\60592253 - Well Rehab GST No. 2, WP 4\900 CAD, GIS\910-CAD\20-SHEETS\ELECTRICAL\03E101.dwg LAYOUT: 01E101 DATE: 6/27/2019 3:25:35 PM BY: GARNERJ

Date: Jun 27, 2019 - 3:25pm User: garnerj File: P:_PWD\SJRA\60592253 - Well Rehab GST No. 2, WP 4\900 CAD, GIS\910-CAD\20-SHEETS\ELECTRICAL\03E101.dwg

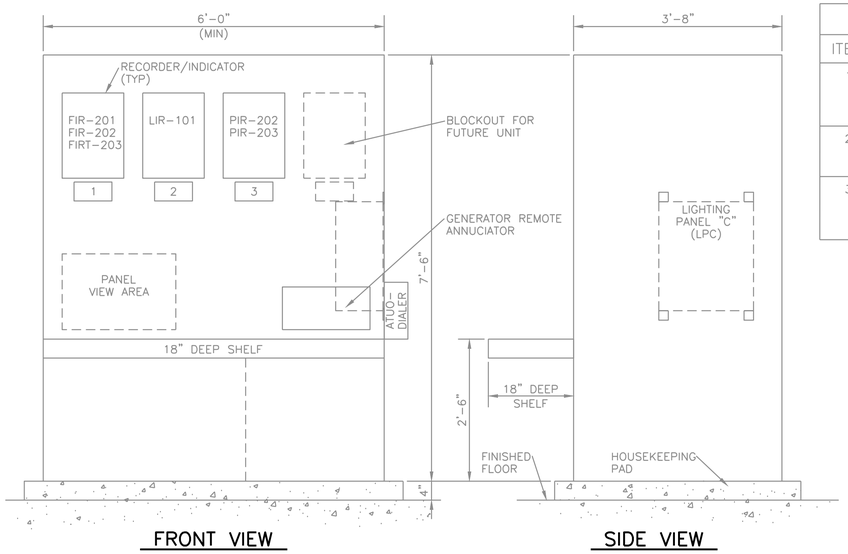

FRONT VIEW

SIDE VIEW

1 - SYSTEM CONTROL PANEL (SCP) (GROUNDWATER PUMP STATION PLC)

NOT TO SCALE

NAMEPLATE TABLE	
ITEM	INSCRIPTION
1	STATION GPM OUTPUT RED PEN – NORTH (GPM) BLUE PEN – SOUTH (GPM) GREEN PEN – TOTAL (GPM)
2	GROUND STORAGE TANK LEVEL RED PEN – GST-1 LEVEL
3	STATION PRESSURE AND WELL FLOW RED PEN – NORTH PRESSURE BLUE PEN – SOUTH PRESSURE GREEN PEN – TOTAL WELL FLOW

NOTE:
DETAIL PROVIDED FOR INFORMATION ONLY.

LEGEND:

EXISTING (LIGHT LINE WORK)

PROPOSED (DARK LINE WORK)

AECOM

AECOM TECHNICAL SERVICES, INC.
19219 KATY FREEWAY, SUITE 100
HOUSTON, TEXAS 77094
WWW.AECOM.COM
TBPE REG. NO. F-3580

AECOM Project No.: 60592253

STATE OF TEXAS
C. J. TROUTT
41075
REGISTERED
PROFESSIONAL ENGINEER
06/28/2019

SAN JACINTO RIVER AUTHORITY
THE WOODLANDS DIVISION

GROUND STORAGE TANK NO. 2 AT WATER PLANT NO. 4

ISSUE	DATE	DESCRIPTION
0	06/28/2019	ISSUED FOR CONSTRUCTION

SJRA PROJECT NO: WDPR 0098.1001.2G002
FILE NAME: 03E501.dwg
DRAWN BY: Z HARPER / J GARNER
CHECKED BY: C TROUTT
SCALE: AS NOTED

ELECTRICAL

PUMP BUILDING DETAILS

SHEET 03E501
SEQ. 37 OF 45

AGENCY REVIEW SUBMITTAL GST NO. 2 AT WP NO. 4

FILE: P:_PWD\SJRA\60592253 – Well Rehab GST No. 2, WP 4\900 CAD, GIS\910-CAD\20-SHEETS\ELECTRICAL\03E501.dwg LAYOUT: 03E501 DATE: 6/27/2019 3:25:47 PM BY: GARNERJ

Date: Jun 27, 2019 – 3:25pm User: garnerj File: P:_PWD\SJRA\60592253 – Well Rehab GST No. 2, WP 4\900 CAD, GIS\910-CAD\20-SHEETS\ELECTRICAL\03E501.dwg

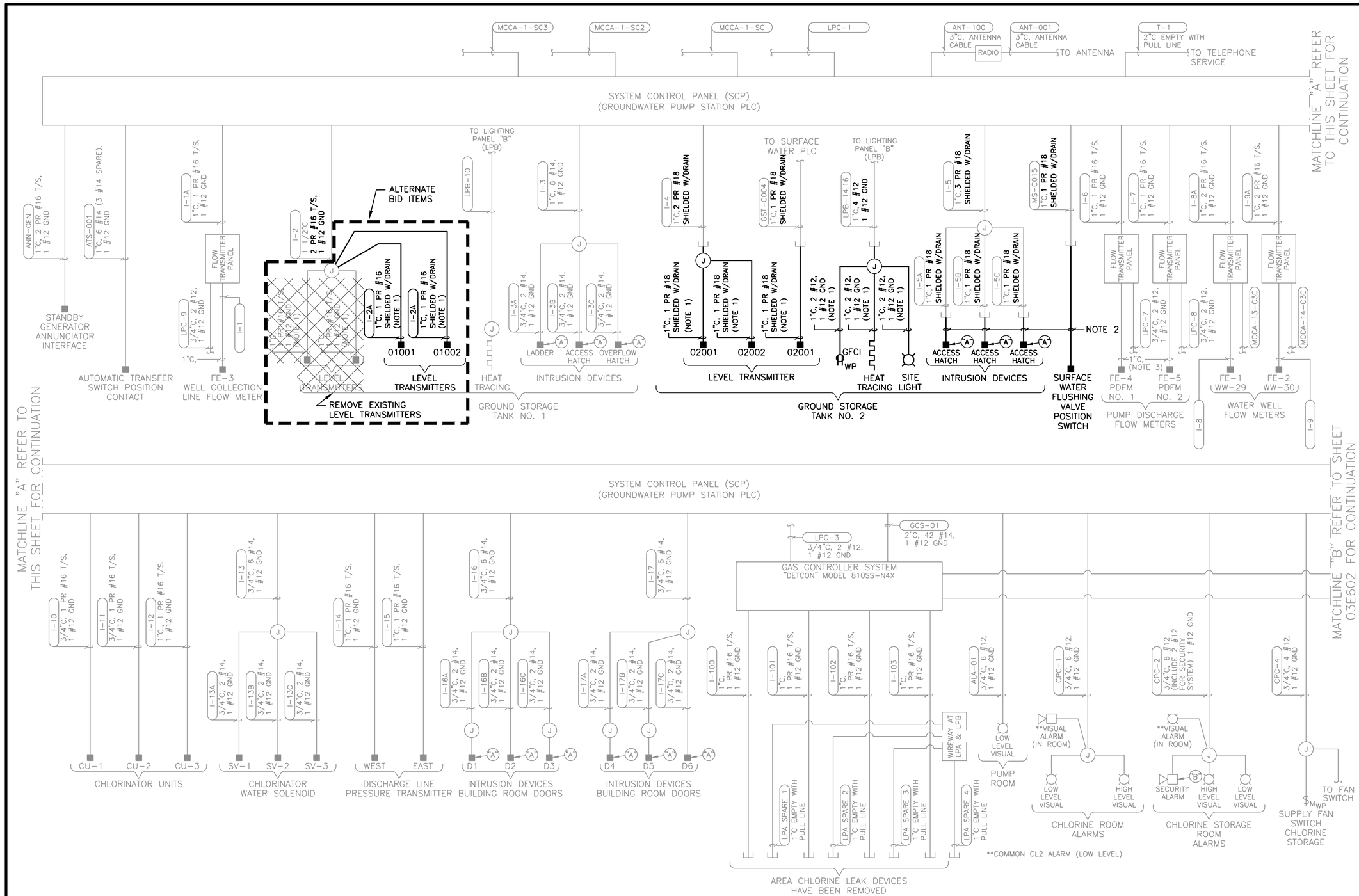

NOTES:

1. CONDUIT SHALL BE PVC COATED RIGID STEEL.
2. EXTEND EXISTING CONDUITS TO PROPOSED EQUIPMENT USING PVC COATED RIGID STEEL.

ITEM	DEVICE OR EQUIPMENT	DECSRIPTION
"A"	PROXIMITY SENSOR	"CUTLER-HAMMER" E57-30GE25-D
	PROXIMITY SENSOR MOUNTING BRACKET	"CULTER-HAMMER" E57KM30 STAINLESS STEEL
"B"	ELECTRONIC ALARM SIREN	"FEDERAL SIGNAL" NO. SST-MT 120 VAC (GRAINGER NO. 1N742) WITH 4A969 MOUNTING BOX.

SYSTEM CONTROL PANEL PARTIAL ONE LINE DIAGRAM

NTS

LEGEND:

- EXISTING (LIGHT LINE WORK)
- PROPOSED (DARK LINE WORK)

AECOM

AECOM TECHNICAL SERVICES, INC.
19219 KATY FREEWAY, SUITE 100
HOUSTON, TEXAS 77094
WWW.AECOM.COM
TBPE REG. NO. F-3580

AECOM Project No.: 60592253

STATE OF TEXAS
C. J. TROUTT
41075
REGISTERED PROFESSIONAL ENGINEER
06/28/2019

SAN JACINTO RIVER AUTHORITY
THE WOODLANDS DIVISION

SAN JACINTO RIVER AUTHORITY SJRA www.SJRA.net

GROUND STORAGE TANK NO. 2 AT WATER PLANT NO. 4

ISSUE	DATE	DESCRIPTION
0	06/28/2019	ISSUED FOR CONSTRUCTION

SJRA PROJECT NO: WDPR 0098.1001.2G002
FILE NAME: 03E601.dwg
DRAWN BY: Z HARPER / J GARNER
CHECKED BY: C TROUTT
SCALE: NONE

ELECTRICAL

SYSTEM CONTROL PANEL PARTIAL ONE LINE DIAGRAM MODIFICATIONS SHEET 1 OF 2

SHEET 03E601
SEQ. 38 OF 45

AGENCY REVIEW SUBMITTAL GST NO. 2 AT WP NO. 4

FILE: P:_PWD\SJRA\60592253 - Well Rehab GST No. 2, WP 4\900 CAD, GIS\910-CAD\20-SHEETS\ELECTRICAL\03E601.dwg LAYOUT: 03E601 DATE: 6/27/2019 3:26:00 PM BY: GARNERJ

Date: Jun 27, 2019 - 3:26pm User: garnerj File: P:_PWD\SJRA\60592253 - Well Rehab GST No. 2, WP 4\900 CAD, GIS\910-CAD\20-SHEETS\ELECTRICAL\03E601.dwg

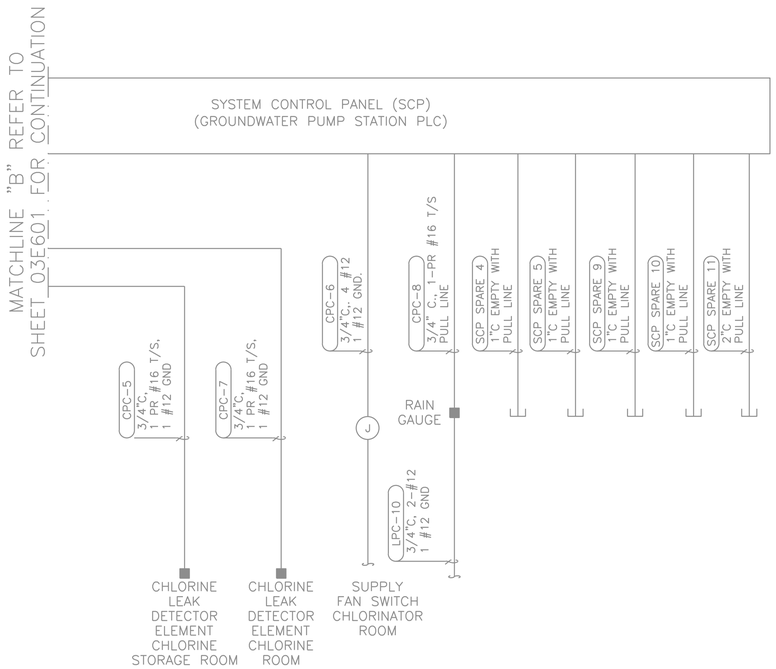

SYSTEM CONTROL PANEL PARTIAL ONE LINE DIAGRAM

NTS

LEGEND:

EXISTING (LIGHT LINE WORK)

PROPOSED (DARK LINE WORK)

AECOM

AECOM TECHNICAL SERVICES, INC.
19219 KATY FREEWAY, SUITE 100
HOUSTON, TEXAS 77094
WWW.AECOM.COM
TBPE REG. NO. F-3580

AECOM Project No.: 60592253

STATE OF TEXAS
C. J. TROUTT
41075
REGISTERED PROFESSIONAL ENGINEER
06/28/2019

SAN JACINTO RIVER AUTHORITY
THE WOODLANDS DIVISION

GROUND STORAGE TANK NO. 2 AT WATER PLANT NO. 4

ISSUE	DATE	DESCRIPTION
0	06/28/2019	ISSUED FOR CONSTRUCTION

SJRA PROJECT NO: WDPR 0098.1001.2G002
FILE NAME: 03E602.dwg
DRAWN BY: Z HARPER / J GARNER
CHECKED BY: C TROUTT
SCALE: NONE

ELECTRICAL

SYSTEM CONTROL PANEL PARTIAL ONE LINE DIAGRAM MODIFICATIONS SHEET 2 OF 2

SHEET 03E602

SEQ. 39 OF 45

AGENCY REVIEW SUBMITTAL GST NO. 2 AT WP NO. 4

FILE: P:_PWD\SJRA\60592253 - Well Rehab GST No. 2, WP 4\900 CAD, GIS\910-CAD\20-SHEETS\ELECTRICAL\03E602.dwg LAYOUT: 03E601 DATE: 6/27/2019 3:26:13 PM BY: GARNERJ

Date: Jun 27, 2019 - 3:26pm User: garnerj File: P:_PWD\SJRA\60592253 - Well Rehab GST No. 2, WP 4\900 CAD, GIS\910-CAD\20-SHEETS\ELECTRICAL\03E602.dwg

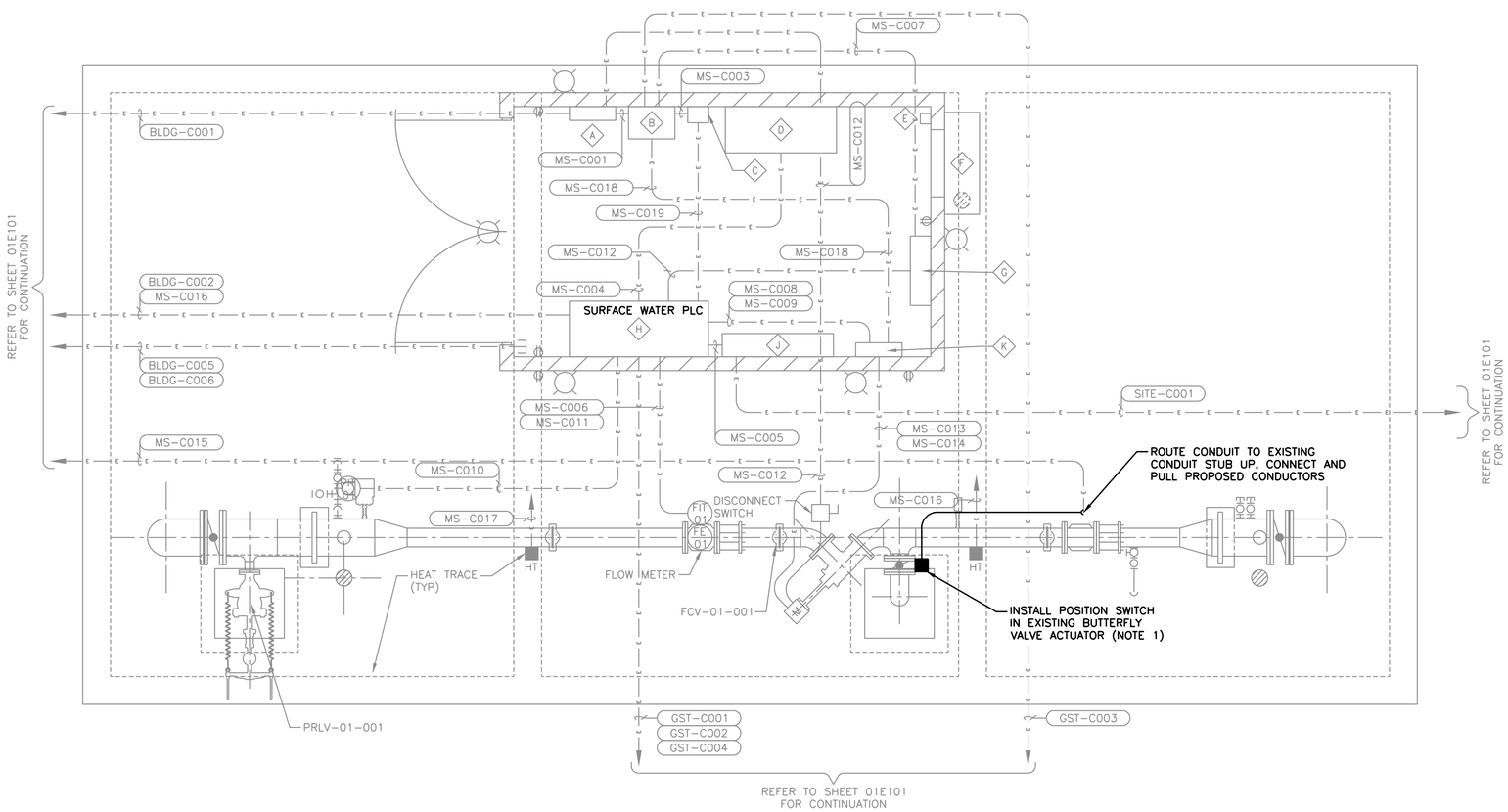

1 FLOW AND PRESSURE CONTROL STATION MODIFICATIONS
3/8" = 1'-0"

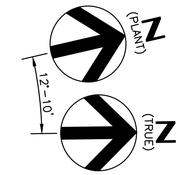

EQUIPMENT SCHEDULE

ITEM	DESCRIPTION
A	PANELBOARD PP-1
B	MINI POWER CENTER MPC-1
C	PLC ISOLATION TRANSFORMER
D	24 VDC BATTERY SYSTEM
E	THERMOSTAT
F	A/C UNIT
G	ANALYZER PANEL
H	GR-GWP04-PLDG-PLC-01-001
J	FIBER OPTIC TERMINAL PANEL
K	FCV-01-001 CONTROL STATION

NOTES:

1. PROVIDE AND INSTALL POSITION SWITCH (HONEYWELL MICRO SWITCH OP-AR OR APPROVED EQUAL) IN FIELD FOR THE EXISTING AUMA VALVE ACTUATOR FOR GA INDUSTRIES BUTTERFLY VALVE. MODIFY THE EXISTING ACTUATOR AS REQUIRED FOR POSITION SWITCH INSTALLATION. GA INDUSTRIES BUTTERFLY VALVE REPRESENTATIVE IS JOHN VALLEY PHONE NO. (512) 847-9725. FIELD ROUTE 1" CONDUIT TO EXISTING CONDUIT STUB UP.

LEGEND:

EXISTING (LIGHT LINE WORK)

PROPOSED (DARK LINE WORK)

AECOM
AECOM TECHNICAL SERVICES, INC.
19219 KATY FREEWAY, SUITE 100
HOUSTON, TEXAS 77094
WWW.AECOM.COM
TBPE REG. NO. F-3580

AECOM Project No.: 60592253

STATE OF TEXAS
C. J. TROUTT
41075
REGISTERED PROFESSIONAL ENGINEER
06/28/2019

SAN JACINTO RIVER AUTHORITY
THE WOODLANDS DIVISION

SAN JACINTO RIVER AUTHORITY
SJRA
www.SJRA.net

GROUND STORAGE TANK NO. 2 AT WATER PLANT NO. 4

ISSUE	DATE	DESCRIPTION
0	06/28/2019	ISSUED FOR CONSTRUCTION

SJRA PROJECT NO: WDPR 0098.1001.2G002
FILE NAME: 05E101.dwg
DRAWN BY: Z HARPER / J GARNER
CHECKED BY: C TROUTT
SCALE: AS NOTED

ELECTRICAL

FLOW AND PRESSURE CONTROL STATION MODIFICATIONS

SHEET 05E101
SEQ. 40 OF 45

AGENCY REVIEW SUBMITTAL GST NO. 2 AT WP NO. 4

FILE: P:_PWD\SJRA\60592253 - Well Rehab GST No. 2, WP 4\900 CAD, GIS\910-CAD\20-SHEETS\ELECTRICAL\05E101.dwg LAYOUT: 05D101 DATE: 6/27/2019 3:26:26 PM BY: GARNERJ

INSTRUMENT IDENTIFICATION LETTERS

	FIRST LETTER		SUCCEEDING LETTERS		
	MEASURED OR INITIATING VARIABLE	MODIFIER	READOUT OR PASSIVE FUNCTION	OUTPUT FUNCTION	MODIFIER
A	ANALYSIS		ALARM		
B	BURNER, COMBUSTION		USER'S CHOICE	CLOSE, STOP, DECREASE	USER'S CHOICE
C	USER'S CHOICE			CONTROL	
D	USER'S CHOICE	DIFFERENTIAL		OPEN, START, INCREASE	
E	VOLTAGE		SENSOR (PRIMARY ELEMENT)		
F	FLOW RATE	RATIO (FRACTION)			FAIL
G	USER'S CHOICE		GLASS, VIEWING DEVICE		
H	HAND				HIGH, OPENED
I	CURRENT (ELECTRICAL)		INDICATE		
J	POWER	SCAN			
K	TIME, TIME SCHEDULE	TIME; RATE OF CHANGE		CONTROL STATION	
L	LEVEL		LIGHT		LOW, CLOSED
M	MOTOR, MOTION	MOMENTARY		MOTOR	MIDDLE, INTERMEDIATE
N	USER'S CHOICE		USER'S CHOICE	USER'S CHOICE	ON OR OPERATE
O	USER'S CHOICE		ORIFICE, RESTRICTION		OVERLOAD
P	PRESSURE, VACUUM		POINT (TEST) CONNECTION	PUMP	
Q	QUANTITY	INTEGRATE, TOTALIZE			
R	RADIATION		RECORD		
S	SPEED, FREQUENCY	SAFETY		SWITCH	
T	TEMPERATURE			TRANSMIT	
U	MULTIVARIABLE		MULTIFUNCTION	MULTIFUNCTION	MULTIFUNCTION
V	VIBRATION, MECH. ANALYSIS			VALVE, DAMPER, LOUVER	
W	WEIGHT, FORCE		WELL		
X	UNCLASSIFIED	X AXIS	UNCLASSIFIED	UNCLASSIFIED	UNCLASSIFIED
Y	EVENT, STATE OR PRESENCE	Y AXIS		RELAY, COMPUTE, CONVERT	
Z	POSITION, DIMENSION	Z AXIS		DRIVER, ACTUATOR, UNCLASSIFIED FINAL CONTROL ELEMENT	

FLOW STREAM & INSTRUMENT LINE SYMBOLS

- XX–YY — MAIN FLOW STREAM XX = SIZE YY = SERVICE
- XX–YY — SECONDARY FLOW STREAM
- XX–YY — OTHER FLOW STREAM
- OPEN CHANNEL OR TANK FLOW STREAM
- ELECTRIC SIGNAL
- ELECTROMAGNETIC OR SONIC SIGNAL
- PNEUMATIC SIGNAL
- HYDRAULIC SIGNAL
- CAPILLARY TUBE
- INSTRUMENT SUPPLY OR CONNECTION TO PROCESS
- DATA LINK
- X — X — SIGNAL CONTINUATION ON SAME DRAWING. X = 1,2,3,ETC.
- CONNECTING LINES
- NON–CONNECTING LINES
- FLOW STREAM NO. NN TO EQUIPMENT NO. XX
- SIGNAL NO. NN TO COMPONENT NO. XX
- FLOW STREAM TO OR FROM EQUIPMENT NOT SHOWN ON OTHER DRAWINGS

ACTUATOR SYMBOLS

- PISTON ACTUATOR
- MOTOR
- SOLENOID
- DIAPHRAGM (SPRING OPPOSED)
- DIAPHRAGM (PRESSURE BALANCED)
- PRESSURE OR VACUUM RELIEF SPRING WEIGHT LOADED

NOTE: ON LOSS OF PRIMARY POWER (PNEUMATIC OR ELECTRICAL)
XX:A: FO = FAIL OPEN
FC = FAIL CLOSED
FI = FAIL TO INTERMEDIATE POSITION
BLANK = FAIL TO LAST POSITION

VALVE AND GATE SYMBOLS

- BALL VALVE
- BALL CHECK VALVE
- BUTTERFLY VALVE
- CHECK VALVE
- DIAPHRAGM VALVE
- ECCENTRIC PLUG VALVE
- GATE VALVE
- GLOBE VALVE
- KNIFE GATE VALVE
- PINCH VALVE
- PLUG VALVE
- PREFABRICATED SLIDE GATE
- UNCLASSIFIED GATE (SEE SPECIFICATIONS)
- AIR RELEASE VALVE
- MUD VALVE
- THREE WAY VALVE

INSTRUMENT & FUNCTION TAGGING

LLLLUUNNL
- LLLL = FUNCTIONAL INSTRUMENT IDENTIFICATION LETTERS FROM INSTRUMENT IDENTIFICATION TABLE
- L = LETTER SUFFIX TO DISTINGUISH BETWEEN INSTRUMENTS IN LOOP WITH SAME FUNCTIONAL IDENTIFICATION. (USED AS REQUIRED)
- UUNN = LOOP NUMBER

EEEE–AASSUUNN
- EQUIPMENT TAG

EXPLANATORY NOTATIONS

HAND SWITCHES

HS XX — SELECTOR SWITCH (MAINTAINED CONTACTS)

HMS XX — SPRING RETURN SWITCH OR PUSHBUTTONS (MOMENTARY CONTACTS)

NOTE XX:	
A/M	AUTO/MANUAL
CM	COMPUTER/MANUAL
CAM	COMPUTER/AUTO /MANUAL
CL	COMPUTER/LOCAL
ESTOP	EMERGENCY STOP
FR	FOWARD/REVERSE
FOR	FORWARD/OFF /REVERSE
FS	FAST/SLOW
FOS	FAST/OFF/SLOW
HO	HAND/OFF
LR	LOCAL/REMOTE
LOS	LOCKOUT/STOP
MFS	MODULATE FASTER /SLOWER
MOC	MODULATE OPEN /CLOSE
OC	OPEN/CLOSE
OSC	OPEN/STOP/CLOSE
SS	START/STOP

1. "A", WHEN ADDED TO NOTATION, INDICATES AUTO. EXAMPLE: HOA = HAND/OFF/AUTO
2. "R", WHEN ADDED TO NOTATION, INDICATES REMOTE. EXAMPLE: HOR = HAND/OFF/REMOTE

ANALYSIS INSTRUMENTS

AE XX — EXPOSED PROBE OR GAS DETECTOR

AE XX — TAPPED OR SAMPLED

AE XX — IN–LINE

NOTE XX:	
CLG	CHLORINE GAS
CLR	CHLORINE RESIDUAL
MHO	CONDUCTIVITY
PH	pH
SD	SOLIDS DENSITY
SS	SUSPENDED SOLIDS
TURB	TURBIDITY
UV254	ORGANICS MONITOR BASED ON 254 NM ULTRAVIOLET LIGHT SOURCE

INPUTS & OUTPUTS TO SHARED OR PROGRAMMABLE LOGIC CONTROLLER

- ANALOG INPUT
- ANALOG OUTPUT
- DISCRETE INPUT
- DISCRETE OUTPUT

GENERAL NOTES:

1. THIS IS A GENERAL P&ID SHEET. SOME SYMBOLS OR NOTATIONS MAY NOT BE USED ON THIS PROJECT.
2. MOTOR CONTROL (MC) & VARIABLE SPEED DRIVE (VSD) PANELS ARE SHOWN WITH EXTERNAL INTERFACE SIGNALS ONLY.
3. A CONTROL PANEL (CP) PACKAGED WITH MECHANICAL EQUIPMENT OR A SYSTEM IS SHOWN WITH EXTERNAL INTERFACE SIGNALS SIMILAR TO MC & VSD PANELS. SELECTED PANEL MOUNTED INSTRUMENTS MAY BE SHOWN. REFERENCE ASSOCIATED SPECIFICATION SECTION FOR COMPLETE PANEL INSTRUMENT REQUIREMENTS.
4. PIPING, EQUIPMENT & INSTRUMENTS PROVIDED BY OTHERS ARE SHOWN LIGHT–LINED, SCREENED OR DOTTED.
5. ALL EQUIPMENT CONTROL STATIONS (HOA, ON/OFF, ETC.) AND MCC DEVICES ARE SUPPLIED UNDER DIVISIONS 25 AND 26.

PRIMARY ELEMENT SYMBOLS

FLOW

- M — ELECTROMAGNETIC
- PROPELLER OR TURBINE
- THERMAL MASS
- FI — ROTAMETER
- ORIFICE PLATE
- WEIR
- VENTURI

LEVEL

- LE — ULTRASONIC
- LS — FLOAT
- LT — SUBMERSIBLE

TEMPERATURE

- TE — TEMPERATURE ELEMENT WITH WELL
- TE — TEMPERATURE ELEMENT SURFACE MOUNT

INSTRUMENT & FUNCTION SYMBOLS

- FIELD MOUNTED
- PILOT LIGHT
- FACE OF PANEL MOUNTED
- INTERIOR OF PANEL MOUNTED
- PANEL PILOT LIGHT
- I — INTERLOCK LOGIC
- XXX — FIELD SWITCH
- XXX — PANEL MOUNTED SWITCH
- EXAMPLE OF INSTRUMENTS SHARING COMMON HOUSING
- SCADA MONITORING OR CONTROL FUNCTION
- MCC MOUNTED DEVICE
- INTERIOR OF MCC MOUNTED
- MCC PILOT LIGHT

MISCELLANEOUS SYMBOLS

- DIAPHRAGM SEAL
- ANNULAR DIAPHRAGM
- RUPTURE DISK (PRESSURE RELIEF)
- RUPTURE DISK (VACUUM RELIEF)
- (REGULATED SIDE) PRESSURE REGULATOR
- VENT TO ATMOSPHERE
- AIR GAP
- OR — PRESSURE RELIEF VALVE
- FLOW STRAIGHTENER
- T — TRAP
- XG — SITE GLASS NOTE X: F = FLOW L = LEVEL
- INJECTOR
- POSITIVE DISPLACEMENT BLOWER
- HEAT TRACING
- VAPORIZER
- CALIBRATION TUBE/COLUMN
- PULSATION DAMPER
- 120 — 120 VAC ELECTRICAL SUPPLY
- UPS — 120 VAC UNINTERRUPTIBLE PS
- 480 — 480 VAC ELECTRICAL SUPPLY
- 24 — 24 VDC ELECTRICAL SUPPLY
- PUMP CONTROL/ BACKPRESSURE VALVE
- INLET AIR FILTER
- DISCHARGE AIR FILTER
- STATIC MIXER

EQUIPMENT SYMBOLS

- HEAT EXCHANGER
- CENTRIFUGAL PUMP (DRY PIT)
- VERTICAL INLINE PUMP
- CENTRIFUGAL PUMP (WET PIT)
- SCREW PUMP
- CENTRIFUGAL COMPRESSOR OR BLOWER
- FAN
- RECIPROCATING COMPRESSOR (PD)
- ROTARY COMPRESSOR (PD)
- M — MOTOR
- MIXER
- EJECTOR
- METERING PUMP

NOTE: PD = POSITIVE DISPLACEMENT

- VERTICAL TURBINE PUMP
- POSITIVE DISPLACEMENT PUMP
- ROTARY LOBE PUMP
- HOSE PUMP
- SUBMERSIBLE PUMP
- DRAIN
- DIAL PISTON PUMP
- DISCHARGE SILENCER
- PROGRESSIVE CAVITY PUMP

AECOM
AECOM TECHNICAL SERVICES, INC.
19219 KATY FREEWAY, SUITE 100
HOUSTON, TEXAS 77094
WWW.AECOM.COM
TBPE REG. NO. F–3580

AECOM Project No.: 60592253

STATE OF TEXAS — C. J. TROUTT — 41075 — REGISTERED PROFESSIONAL ENGINEER
06/28/2019

SAN JACINTO RIVER AUTHORITY
THE WOODLANDS DIVISION

SAN JACINTO RIVER AUTHORITY — SJRA — www.SJRA.net

GROUND STORAGE TANK NO. 2 AT WATER PLANT NO. 4

ISSUE	DATE	DESCRIPTION
0	06/28/2019	ISSUED FOR CONSTRUCTION

SJRA PROJECT NO: WDPR 0098.1001.2G002
FILE NAME: 001001.dwg
DRAWN BY: J GARNER
CHECKED BY: C TROUTT
SCALE: NONE

INSTRUMENTATION

INSTRUMENTATION LEGEND

SHEET 001001
SEQ. 41 OF 45

AGENCY REVIEW SUBMITTAL GST NO. 2 AT WP NO. 4

FILE: P:_PWD\SJRA\60592253 – Well Rehab GST No. 2, WP 4\900 CAD, GIS\910–CAD\20–SHEETS\INSTRUMENTATION\001001.dwg LAYOUT: 001001 DATE: 6/27/2019 3:26:37 PM BY: GARNERJ

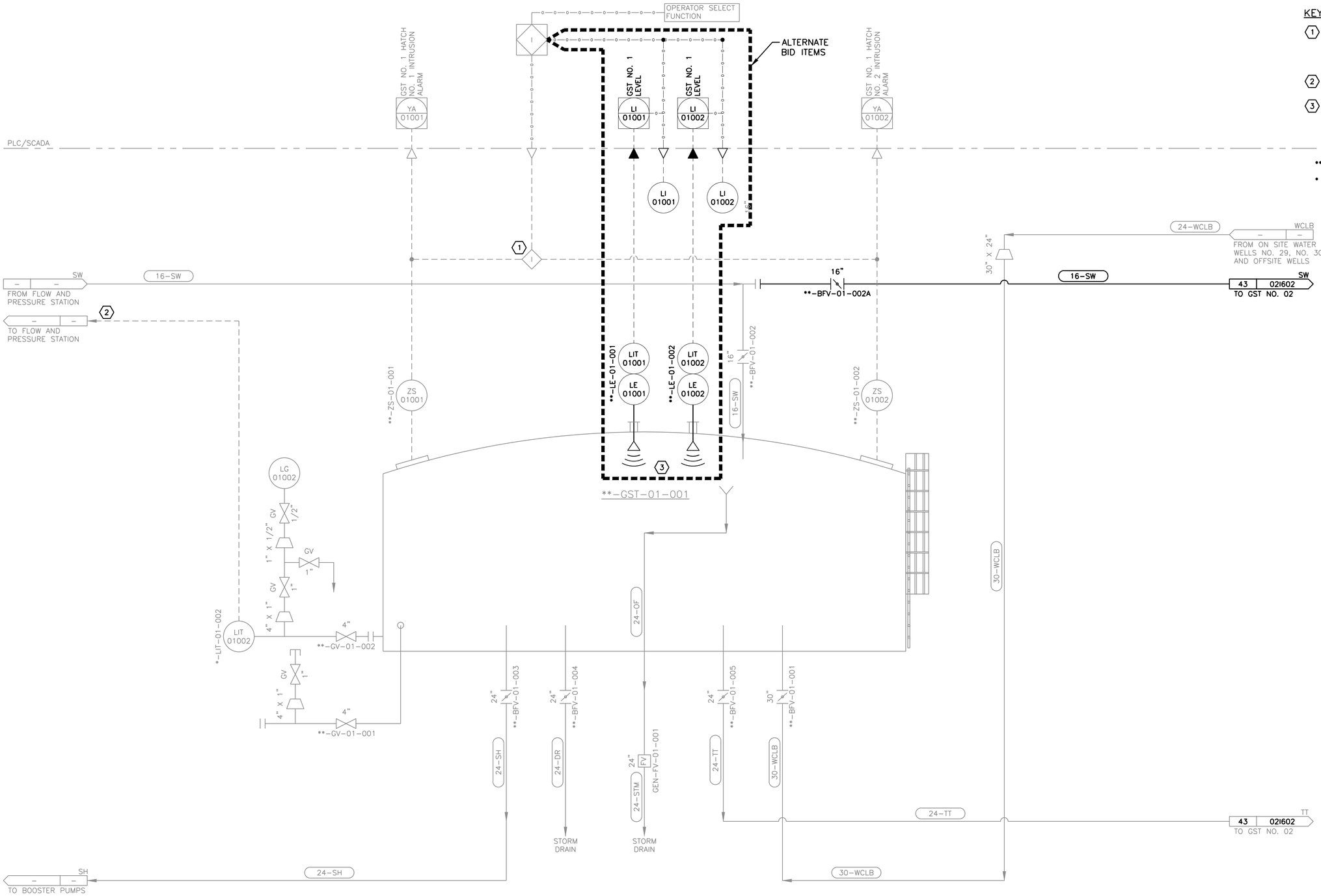

KEY NOTES

1. PUMPS LOCKOUT SHALL NOT BE IN THE START CIRCUIT. THE BOOSTER PUMPS SHALL BE ABLE TO OPERATE IN HAND MODE IN ORDER TO DRAW DOWN THE TANK LEVEL. THE LOCKOUT SHALL BE PROGRAM TO NOT ALLOW THE BOOSTER PUMPS TO RUN IN AUTO MODE.
2. LEVEL DEVICE WIRE AND CONDUIT ARE PROVIDED UNDER CONTRACT FOR THE FLOW AND PRESSURE STATION.
3. ALTERNATE BID ITEMS INCLUDE DISCONNECTING EXISTING PRESSURE TYPE LEVEL TRANSMITTERS ON EXISTING GST-1, INSTALLING RADAR TYPE LEVEL TRANSMITTERS ON EXISTING GST-1 AND CONNECTING TO EXISTING ANALOG INPUTS.

** DENOTES ADD "WD-GWP04-GST-GST1" PREFIX TAG

* DENOTES ADD "GR-GWP04-GST-GST1" PREFIX TAG

AECOM

AECOM TECHNICAL SERVICES, INC.
19219 KATY FREEWAY, SUITE 100
HOUSTON, TEXAS 77094
WWW.AECOM.COM
TBPE REG. NO. F-3580

AECOM Project No.: 60592253

STATE OF TEXAS — C. J. TROUTT — 41075 — REGISTERED PROFESSIONAL ENGINEER — 06/28/2019

STATE OF TEXAS — XUAN ZHENG — 127444 — LICENSED PROFESSIONAL ENGINEER — 06/28/2019

SAN JACINTO RIVER AUTHORITY
THE WOODLANDS DIVISION

SAN JACINTO RIVER AUTHORITY — SJRA — www.SJRA.net

GROUND STORAGE TANK NO. 2 AT WATER PLANT NO. 4

ISSUE	DATE	DESCRIPTION
0	06/28/2019	ISSUED FOR CONSTRUCTION

SJRA PROJECT NO: WDPR 0098.1001.2G002
FILE NAME: 021601.dwg
DRAWN BY: Z HARPER / J GARNER
CHECKED BY: C TROUTT
SCALE: NONE

INSTRUMENTATION

GROUND STORAGE TANK NO. 1 P&ID

SHEET 021601
SEQ. 42 OF 45

LEGEND:
EXISTING (LIGHT LINE WORK)
PROPOSED (DARK LINE WORK)

AGENCY REVIEW SUBMITTAL GST NO. 2 AT WP NO. 4

FILE: P:_PWD\SJRA\60592253 - Well Rehab GST No. 2, WP 4\900 CAD, GIS\910-CAD\20-SHEETS\INSTRUMENTATION\021601.dwg LAYOUT: 021601 DATE: 6/27/2019 3:26:50 PM BY: GARNERJ

Date: Jun 27, 2019 - 3:26pm User: garnerj File: P:_PWD\SJRA\60592253 - Well Rehab GST No. 2, WP 4\900 CAD, GIS\910-CAD\20-SHEETS\INSTRUMENTATION\021601.dwg

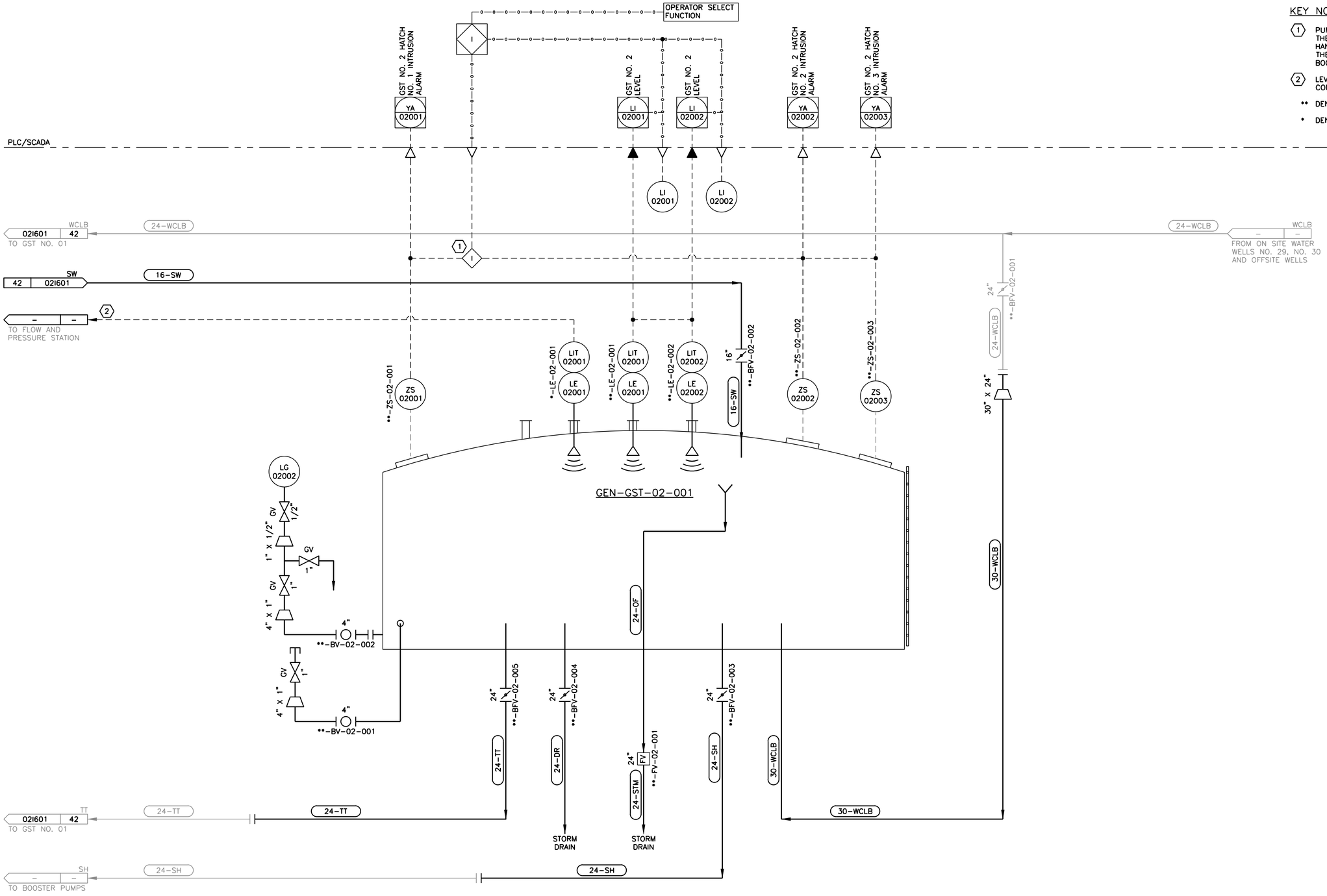

KEY NOTES

1. PUMPS LOCKOUT SHALL NOT BE IN THE START CIRCUIT. THE BOOSTER PUMPS SHALL BE ABLE TO OPERATE IN HAND MODE IN ORDER TO DRAW DOWN THE TANK LEVEL. THE LOCKOUT SHALL BE PROGRAM TO NOT ALLOW THE BOOSTER PUMPS TO RUN IN AUTO MODE.
2. LEVEL DEVICE WIRE AND CONDUIT ARE PROVIDED UNDER CONTRACT FOR THE FLOW AND PRESSURE STATION.

** DENOTES ADD "WD-GWP04-GST-GST2" PREFIX TAG

* DENOTES ADD "GR-GWP04-GST-GST2" PREFIX TAG

AECOM

AECOM TECHNICAL SERVICES, INC.
19219 KATY FREEWAY, SUITE 100
HOUSTON, TEXAS 77094
WWW.AECOM.COM
TBPE REG. NO. F-3580

AECOM Project No.: 60592253

STATE OF TEXAS — C. J. TROUTT — 41075 — REGISTERED PROFESSIONAL ENGINEER — 06/28/2019

STATE OF TEXAS — XUAN ZHENG — 127444 — LICENSED PROFESSIONAL ENGINEER — 06/28/2019

SAN JACINTO RIVER AUTHORITY
THE WOODLANDS DIVISION

SAN JACINTO RIVER AUTHORITY — SJRA — www.SJRA.net

GROUND STORAGE TANK NO. 2 AT WATER PLANT NO. 4

ISSUE	DATE	DESCRIPTION
0	06/28/2019	ISSUED FOR CONSTRUCTION

SJRA PROJECT NO: WDPR 0098.1001.2G002
FILE NAME: 021602.dwg
DRAWN BY: Z HARPER / J GARNER
CHECKED BY: C TROUTT
SCALE: AS NOTED

INSTRUMENTATION

GROUND STORAGE TANK NO. 2 P&ID

SHEET 021602
SEQ. 43 OF 45

LEGEND:
- EXISTING (LIGHT LINE WORK)
- PROPOSED (DARK LINE WORK)

AGENCY REVIEW SUBMITTAL GST NO. 2 AT WP NO. 4

FILE: P:_PWD\SJRA\60592253 - Well Rehab GST No. 2, WP 4\900 CAD, GIS\910-CAD\20-SHEETS\INSTRUMENTATION\021602.dwg LAYOUT: 021602 DATE: 6/27/2019 3:27:02 PM BY: GARNERJ

Date: Jun 27, 2019 - 3:27pm User: garnerj File: P:_PWD\SJRA\60592253 - Well Rehab GST No. 2, WP 4\900 CAD, GIS\910-CAD\20-SHEETS\INSTRUMENTATION\021602.dwg

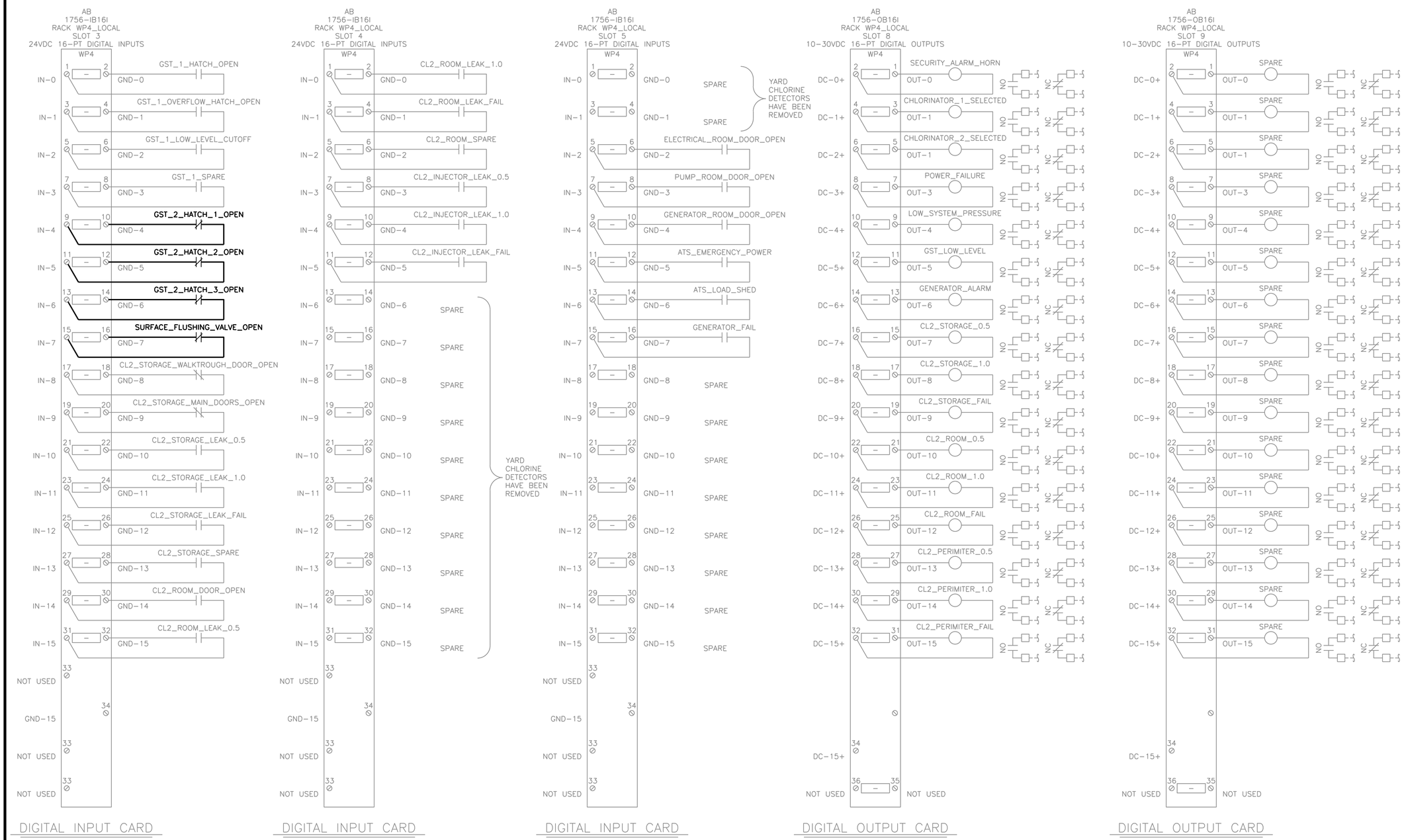

GROUNDWATER PUMP STATION PLC

LEGEND:

EXISTING (LIGHT LINE WORK)

PROPOSED (DARK LINE WORK)

AGENCY REVIEW SUBMITTAL GST NO. 2 AT WP NO. 4

AECOM
AECOM TECHNICAL SERVICES, INC.
19219 KATY FREEWAY, SUITE 100
HOUSTON, TEXAS 77094
WWW.AECOM.COM
TBPE REG. NO. F-3580

AECOM Project No.: 60592253

STATE OF TEXAS
C. J. TROUTT
41075
REGISTERED PROFESSIONAL ENGINEER
06/28/2019

SAN JACINTO RIVER AUTHORITY
THE WOODLANDS DIVISION

SAN JACINTO RIVER AUTHORITY SJRA www.SJRA.net

GROUND STORAGE TANK NO. 2 AT WATER PLANT NO. 4

ISSUE	DATE	DESCRIPTION
0	06/28/2019	ISSUED FOR CONSTRUCTION

SJRA PROJECT NO: WDPR 0098.1001.2G002
FILE NAME: 031601.dwg
DRAWN BY: Z HARPER / J GARNER
CHECKED BY: C TROUTT
SCALE: NONE

INSTRUMENTATION

REMOTE I/O DIGITAL INPUT CARDS MODIFICATIONS

SHEET 031601
SEQ. 44 OF 45

FILE: P:_PWD\SJRA\60592253 - Well Rehab GST No. 2, WP 4\900 CAD, GIS\910-CAD\20-SHEETS\INSTRUMENTATION\031601.dwg LAYOUT: 031602 DATE: 6/27/2019 3:27:12 PM BY: GARNERJ

Date: Jun 27, 2019 - 3:27pm User: garnerj File: P:_PWD\SJRA\60592253 - Well Rehab GST No. 2, WP 4\900 CAD, GIS\910-CAD\20-SHEETS\INSTRUMENTATION\031601.dwg

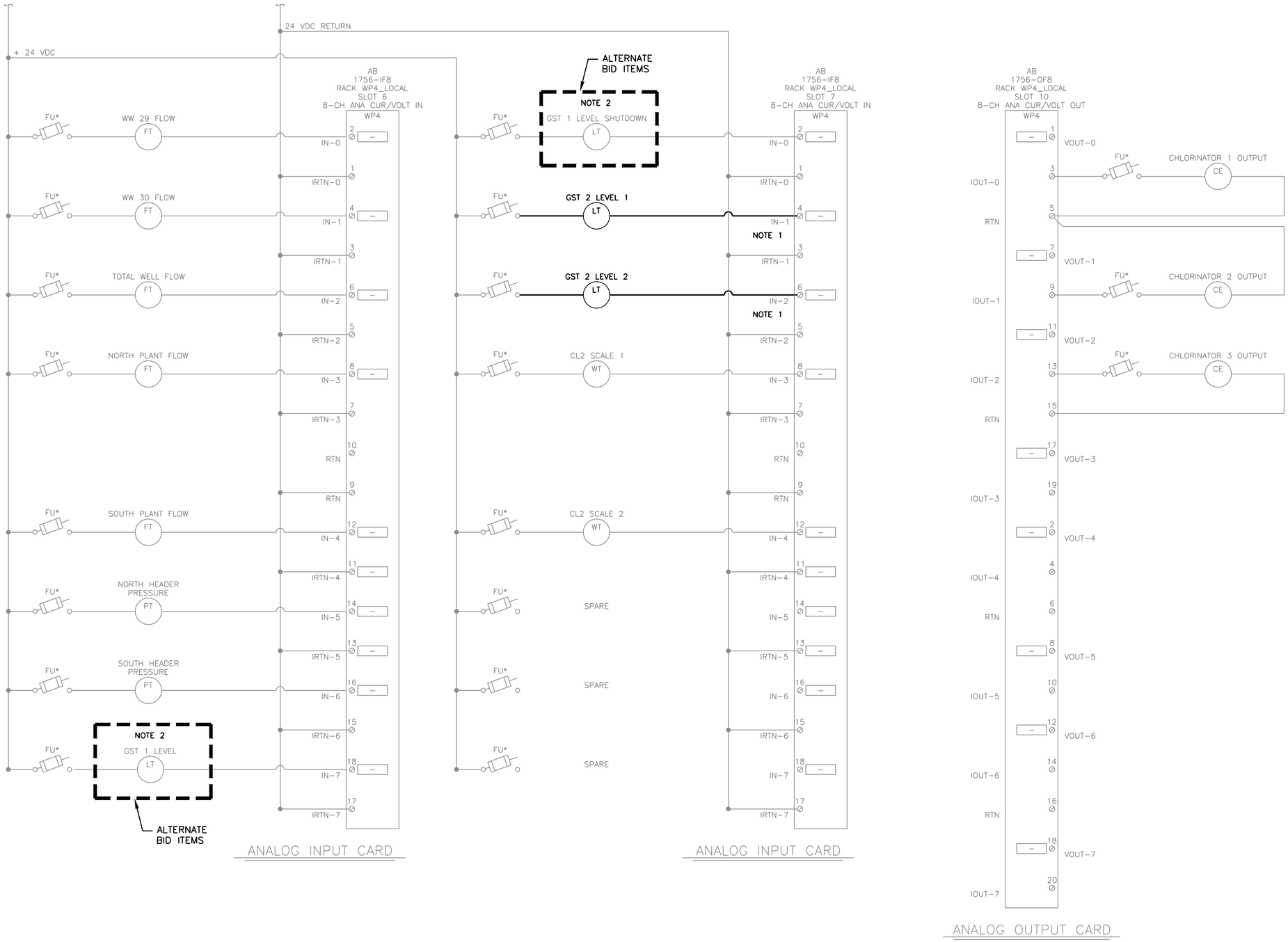

GROUNDWATER PUMP STATION PLC

NOTES:

1. CONTRACTOR SHALL COORDINATE LOCATIONS OF PROPOSED I/O POINTS WITH SJRA.
2. ALTERNATE BID ITEMS INCLUDE DISCONNECTING EXISTING PRESSURE TYPE LEVEL TRANSMITTERS ON EXISTING GST-1, INSTALLING RADAR TYPE LEVEL TRANSMITTERS ON EXISTING GST-1 AND CONNECTING TO EXISTING ANALOG INPUTS.

LEGEND:

EXISTING (LIGHT LINE WORK)

PROPOSED (DARK LINE WORK)

AECOM

AECOM TECHNICAL SERVICES, INC.
19219 KATY FREEWAY, SUITE 100
HOUSTON, TEXAS 77094
WWW.AECOM.COM
TBPE REG. NO. F-3580

AECOM Project No.: 60592253

STATE OF TEXAS
C. J. TROUTT
41075
REGISTERED PROFESSIONAL ENGINEER
06/28/2019

SAN JACINTO RIVER AUTHORITY
THE WOODLANDS DIVISION

SAN JACINTO RIVER AUTHORITY
SJRA
www.SJRA.net

GROUND STORAGE TANK NO. 2 AT WATER PLANT NO. 4

ISSUE	DATE	DESCRIPTION
0	06/28/2019	ISSUED FOR CONSTRUCTION

SJRA PROJECT NO: WDPR 0098.1001.2G002
FILE NAME: 031602.dwg
DRAWN BY: Z HARPER / J GARNER
CHECKED BY: C TROUTT
SCALE: NONE

INSTRUMENTATION

MAIN PLC ANALOG INPUT CARDS AND ANALOG OUTPUT CARD MODIFICATIONS

SHEET 031602
SEQ. 45 OF 45

AGENCY REVIEW SUBMITTAL GST NO. 2 AT WP NO. 4

FILE: P:_PWD\SJRA\60592253 - Well Rehab GST No. 2, WP 4\900 CAD, GIS\910-CAD\20-SHEETS\INSTRUMENTATION\031602.dwg LAYOUT: 031603 DATE: 6/27/2019 3:27:23 PM BY: GARNERJ

Date: Jun 27, 2019 - 3:27pm User: garnerj File: P:_PWD\SJRA\60592253 - Well Rehab GST No. 2, WP 4\900 CAD, GIS\910-CAD\20-SHEETS\INSTRUMENTATION\031602.dwg